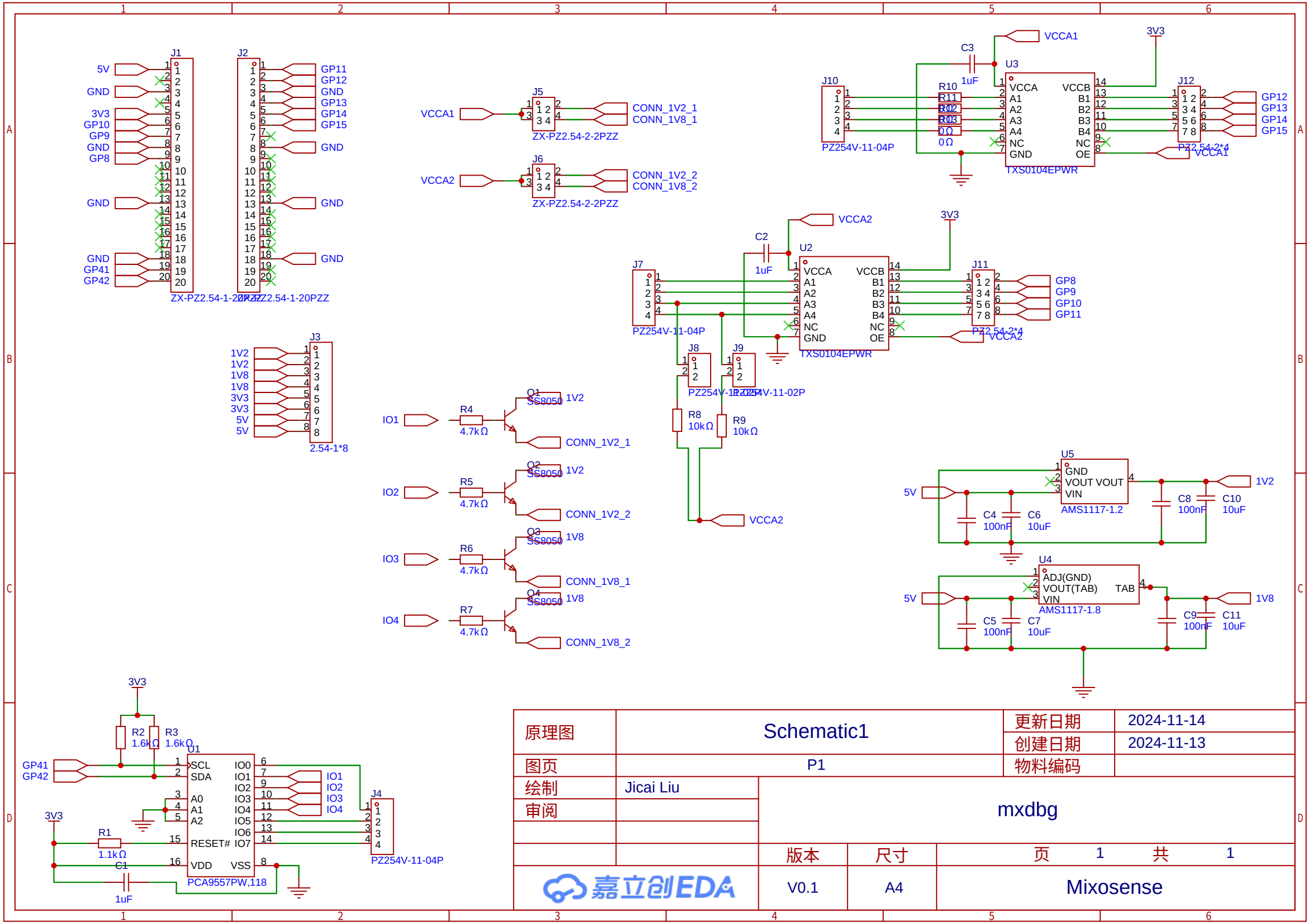
J1
J2
5V
GND
3V3
GP10
GP9
GND
GP8
GND
GND
GP41
GP42
GP11
GP12
GND
GP13
GP14
GP15
GND
GND
GND
ZX-PZ2.54-1-20PZZ
ZX-PZ2.54-1-20PZZ
J5
VCCA1
CONN_1V2_1
CONN_1V8_1
ZX-PZ2.54-2-2PZZ
J6
VCCA2
CONN_1V2_2
CONN_1V8_2
ZX-PZ2.54-2-2PZZ
J10
PZ254V-11-04P
C3
1uF
VCCA1
3V3
U3
R10
R11
R12
R13
0Ω
0Ω
VCCA
A1
A2
A3
A4
NC
GND
VCCB
B1
B2
B3
B4
NC
OE
TXS0104EPWR
J12
GP12
GP13
GP14
GP15
PZ2.54-2*4
VCCA1
J3
1V2
1V2
1V8
1V8
3V3
3V3
5V
5V
2.54-1*8
J7
PZ254V-11-04P
C2
1uF
VCCA2
U2
VCCA
A1
A2
A3
A4
NC
GND
VCCB
B1
B2
B3
B4
NC
OE
TXS0104EPWR
3V3
J11
GP8
GP9
GP10
GP11
PZ2.54-2*4
VCCA2
J8
PZ254V-11-02P
J9
PZ254V-11-02P
R8
10kΩ
R9
10kΩ
VCCA2
IO1
R4
4.7kΩ
Q1
SS8050
1V2
CONN_1V2_1
IO2
R5
4.7kΩ
Q2
SS8050
1V2
CONN_1V2_2
IO3
R6
4.7kΩ
Q3
SS8050
1V8
CONN_1V8_1
IO4
R7
4.7kΩ
Q4
SS8050
1V8
CONN_1V8_2
U5
5V
GND
VOUT VOUT
VIN
AMS1117-1.2
C4
100nF
C6
10uF
C8
100nF
C10
10uF
1V2
U4
5V
ADJ(GND)
VOUT(TAB)
VIN
TAB
AMS1117-1.8
C5
100nF
C7
10uF
C9
100nF
C11
10uF
1V8
3V3
R2
1.6kΩ
R3
1.6kΩ
U1
GP41
GP42
SCL
SDA
A0
A1
A2
RESET#
VDD
VSS
IO0
IO1
IO2
IO3
IO4
IO5
IO6
IO7
IO1
IO2
IO3
IO4
J4
PZ254V-11-04P
3V3
R1
1.1kΩ
C1
1uF
PCA9557PW,118
原理图
Schematic1
更新日期
2024-11-14
创建日期
2024-11-13
图页
P1
物料编码
绘制
Jicai Liu
审阅
mxdbg
版本
V0.1
尺寸
A4
页 1 共 1
嘉立创EDA
Mixosense