SHOWN WITH ADJUSTABLE HEIGHT
OVER-HEAD STEEL HYDRAULIC LINES.

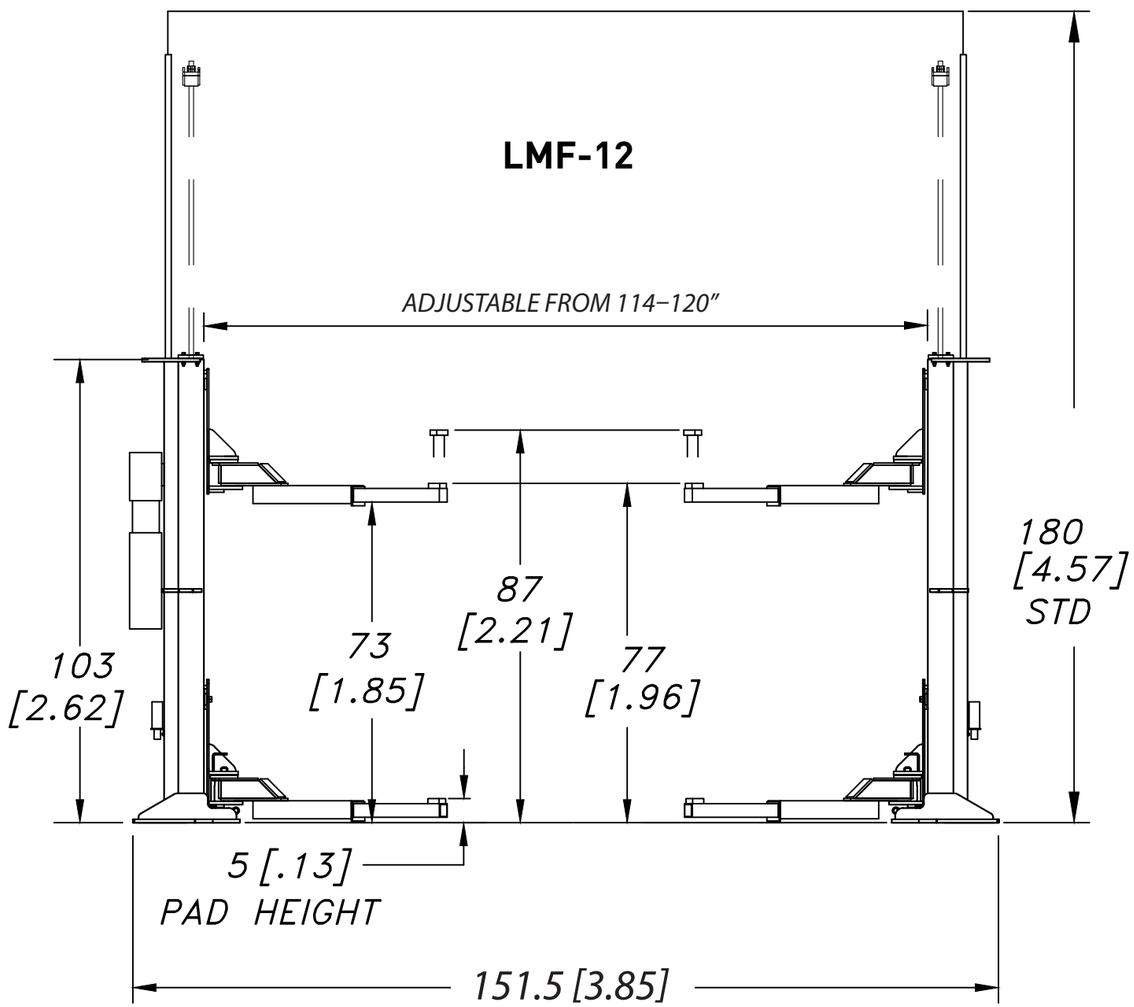

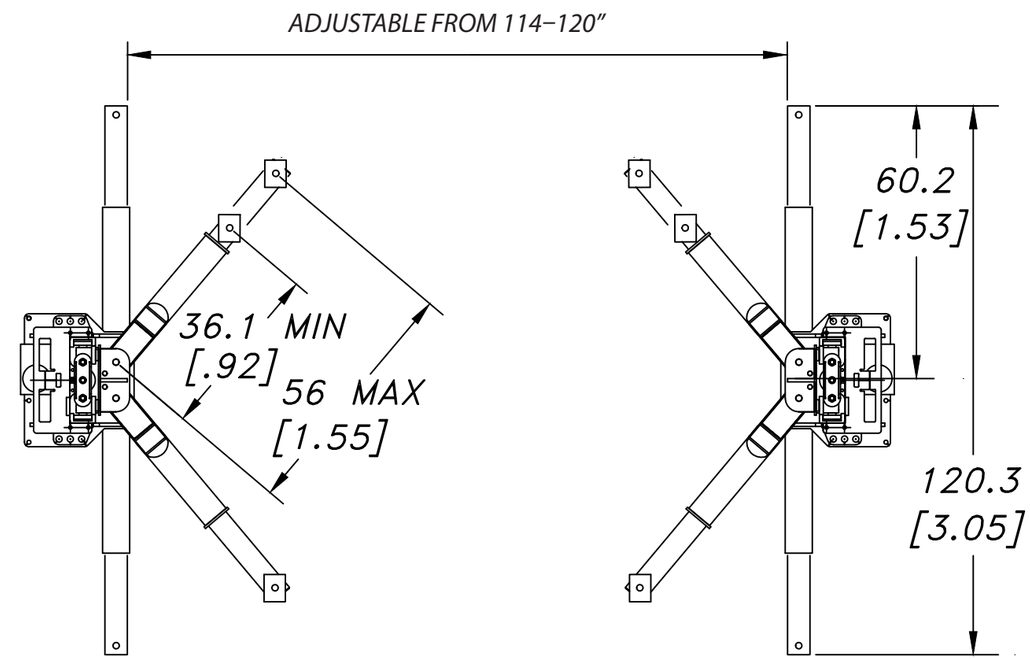

UNITS: INCHES [METERS] Specifications Subject to Change Without Notice

MATERIAL:

B-SIZE

NOTES:
1. REMOVE ALL SHARP CORNERS & EDGES.
2. UNLESS OTHERWISE SPECIFIED, SURFACE FINISH TO BE 125 RMS.
3. WELDING MEDIUM SHALL CONFORM TO AWS SPECIFICATIONS TO E-70XX ELECTRODES OR E-70TI CODE 5.3 FLUX CORE WIRE ONLY.

TOLERANCES:
ANGULAR ± 1°
FRACTIONAL ± .030
DECIMAL:
0.XX ± .030
0.XXX ± .005

FILE NAME ZZ1336

NEXT ASSEMBLY

SCALE	DRAWN G.GORE	MOHAWK RESOURCES LTD.	
CHECKED	APPROVED	TITLE **LMF-12: 2 Stage Arms**	
DATE 08/11	WEIGHT N/A LB.	FROM	DRAWING NUMBER ZZ1336