MODEL ML-220 SPECIFICATIONS

Model:	**ML-220**
Capacity:	20,000 lbs. (9000 Kg)
Motor Rating:	4 HP/208-230V, Single-phase (3ø optional)
Synchronization:	Hydraulic fluid displacement using no chains, cables, or overhead obstructions
Arm Pad Height:	4.5" (11.43 cm) min.
Lifting Height:	6' (1.83 m) under arm
Arm Pad Height @ Full Rise:	6'5" (1.96 m)
Max. Arm Pad Height with Adaptors:	7'3" (2.21 m) (includes 5", 7½" and 10" stackable lift adaptor pads)
Overall Width:	12' 7½" (3.85 m) (**adjustable**)
Width Between Posts:	10' (3.05 m) (**adjustable 114-120"**)
Width Between Lifting Arms:	8' 9¾" (2.69 m) (**adjustable**)
Column Height:	8' 7" (2.62 m)
Max. Cylinder Height:	13'6" (4.11 m)
Overhead Hydraulic Line Height:	15' (4.57 m) Standard (**adjustable** to accommodate any height ceiling or routed in-floor)
Weight:	4100 lbs. (1859.73 Kg)
Concrete Floor Requirements:	**Wide Base**: 5½" of 4,000 psi concrete **Standard Base**: 6½" of 4,000 psi concrete
Anchoring System: Included	(16) ¾"x6" (1.91x15.24 cm) bolts
Mechanical Safety Locks:	**Automatic**; multi-position starting @ 5" (12.7 cm) off the floor
Hydraulic Safety Systems:	**Automatic**; all position
Swing Arm Restraints:	**Automatic** upon ascent
Cylinders:	2 (1 per column)
Drive System:	Direct drive (using no cables or chains)
Lifting Speed:	90 seconds (faster with lighter load)
5" Frame Adaptors (stackable):	4 included as standard equipment
7½" Frame Adaptors (stackable):	4 included as standard equipment
10" Frame Adaptors (stackable):	4 included as standard equipment
Steel Carriage Bearings:	(16) 4" (10.16 cm) diameter (8 per carriage) double sealed, self-lubricating ball bearing rollers
Floor Access Between Posts:	Clear and unobstructed
Warranty:	**25 years structural, 10 year mechanical, plus limited lifetime cylinder seal warranty**

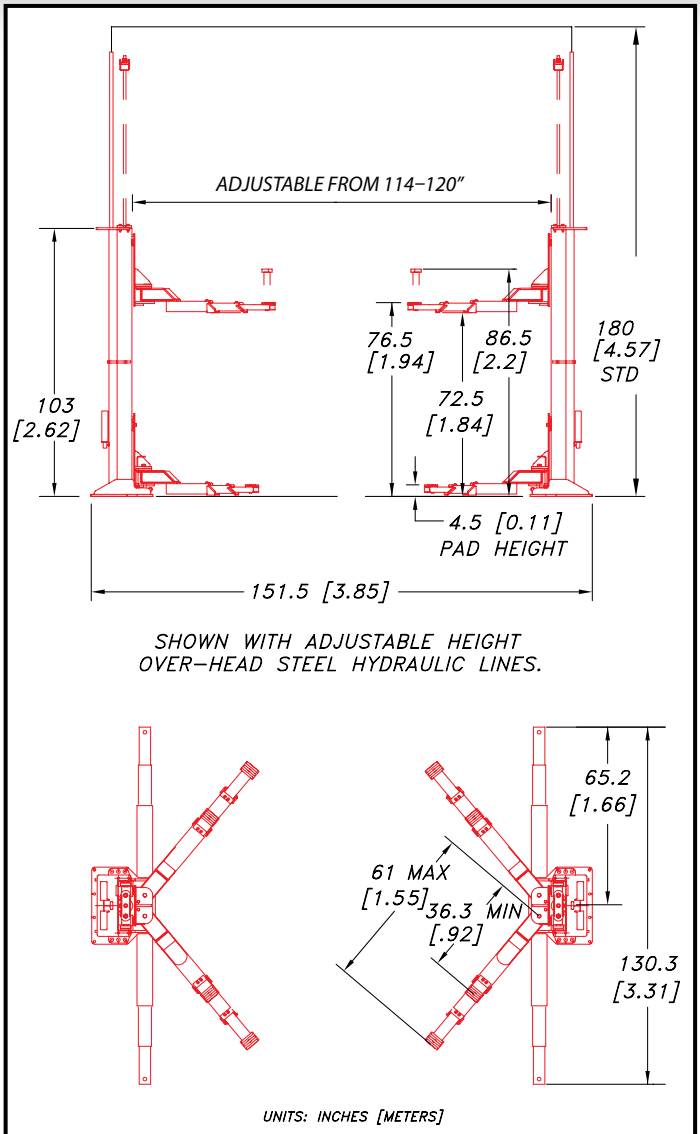

Specifications subject to change without notice

Learn how our two post vehicle lifts compare to the competition.
mohawklifts.com/dare2compare

Mohawk builds the best products with the finest materials, to the highest standards. Just compare our lifts. Our staff will assist you with a fleet evaluation, design assistance and answer any technical questions you have. We invite your calls.

MOHAWK LIFTS

Mohawk Lifts, LLC.
P.O. Box 110
65 Vrooman Ave
Amsterdam, NY 12010
(800) 833-2006
(518) 842-1431
FAX: (518) 842-1289
www.mohawklifts.com

AVAILABLE UNDER DISCOUNTED GOVERNMENT CONTRACT IN ALL 50 STATES

Automotive Lift Institute Member
GSA Contract Holder Contract # GS-07F-207AA
CP Choice Partners — The Right Resources. Right Now.
NASPO ValuePoint Supplier Partner
Sourcewell Awarded Contract Contract # 121223-MRL
HGACBuy.org The Smart Purchasing Solution

DISTRIBUTED BY: