REV.	DESCRIPTION	DATE	BY	APP'D.
△				

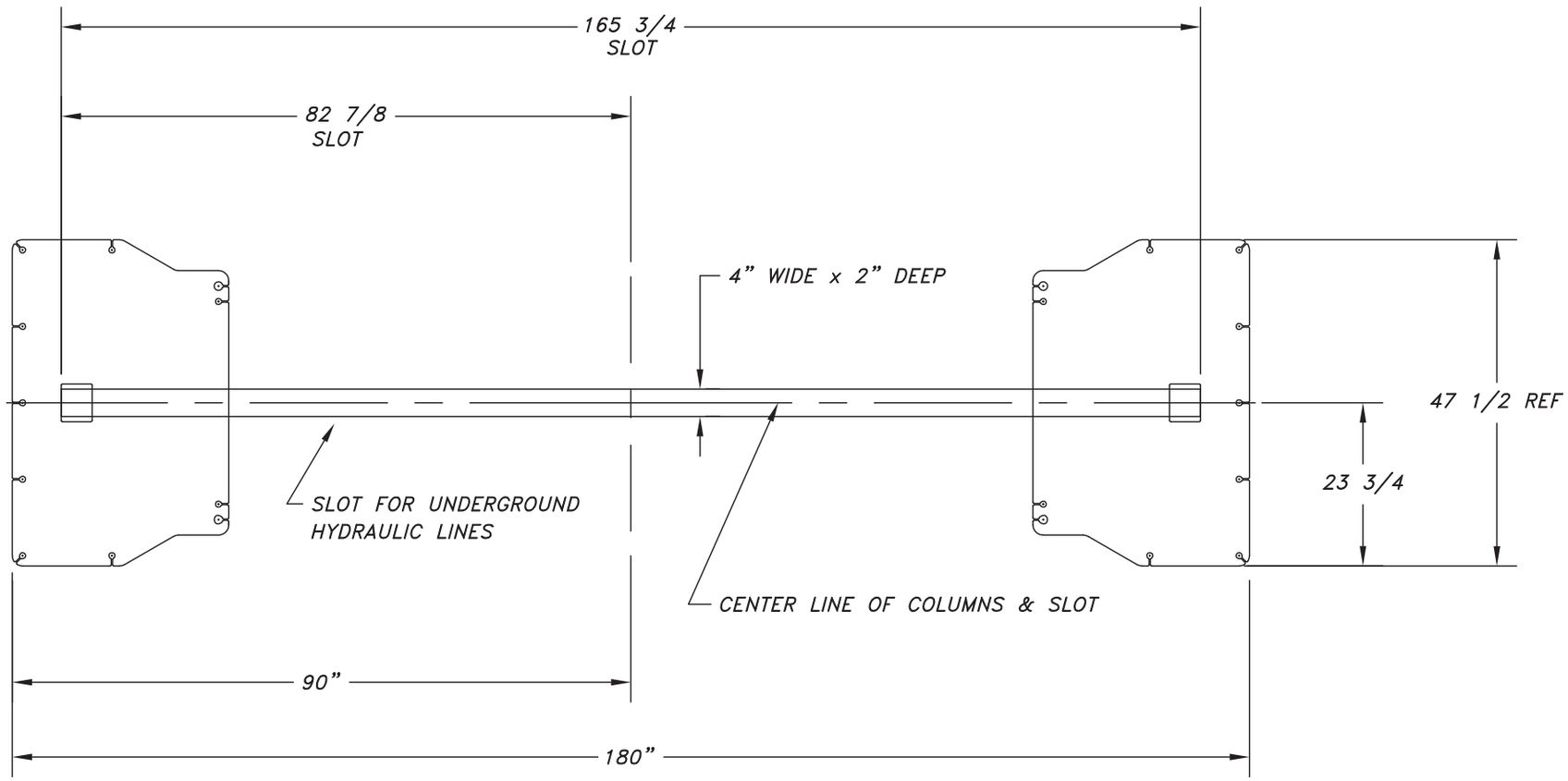

RECOMMENDED LAYOUT INSTRUCTIONS

1. LAYOUT LOCATION OF BASE PLATES WITH CHALK LINE.
2. LAYOUT SLOT WITH CHALK LINES.
3. CUT OUT SLOT.
4. LOCATE COLUMNS.
5. PLACE HYDRAULIC LINES AND ADJUST BEFORE ANCHORING COLUMNS.
6. ANCHOR COLUMNS.

TP-26A

C-SIZE

NOTICE OF CONFIDENTIAL INFORMATION

INFORMATION CONTAINED HEREIN IS CONFIDENTIAL AND PROPERTY OF MOHAWK RESOURCES LTD.. WHERE DRAWING IS FURNISHED TO OTHERS IT SHALL BE USED SOLELY FOR PURPOSES OF INSPECTION, INSTALLATION, OR MAINTENANCE. THE INFORMATION SHALL NOT BE USED OR DISCLOSED BY THE RECIPIENT FOR ANY OTHER PURPOSES WHATSOEVER.

NOTES:
1. REMOVE ALL SHARP CORNERS & EDGES.
2. UNLESS OTHERWISE SPECIFIED, SURFACE FINISH TO BE 125 RMS.
3. WELDING MEDIUM SHALL CONFORM TO AWS SPECIFICATIONS TO E-70XX ELECTRODES OR E-70TI CODE 5.3 FLUX CORE WIRE ONLY.

TOLERANCES:
ANGULAR ± 1°
FRACTIONAL ± .030
DECIMAL:
0.XX ± .030
0.XXX ± .005

FILE NAME E10038

NEXT ASSEMBLY

SCALE	DRAWN	MOHAWK RESOURCES LTD.	
1/8	dak		
CHECKED	APPROVED	TITLE FOR IN-GROUND HYDRAULIC LINES	
DATE 5/99	WEIGHT LB.	FROM	DRAWING NUMBER 018-010-038 △