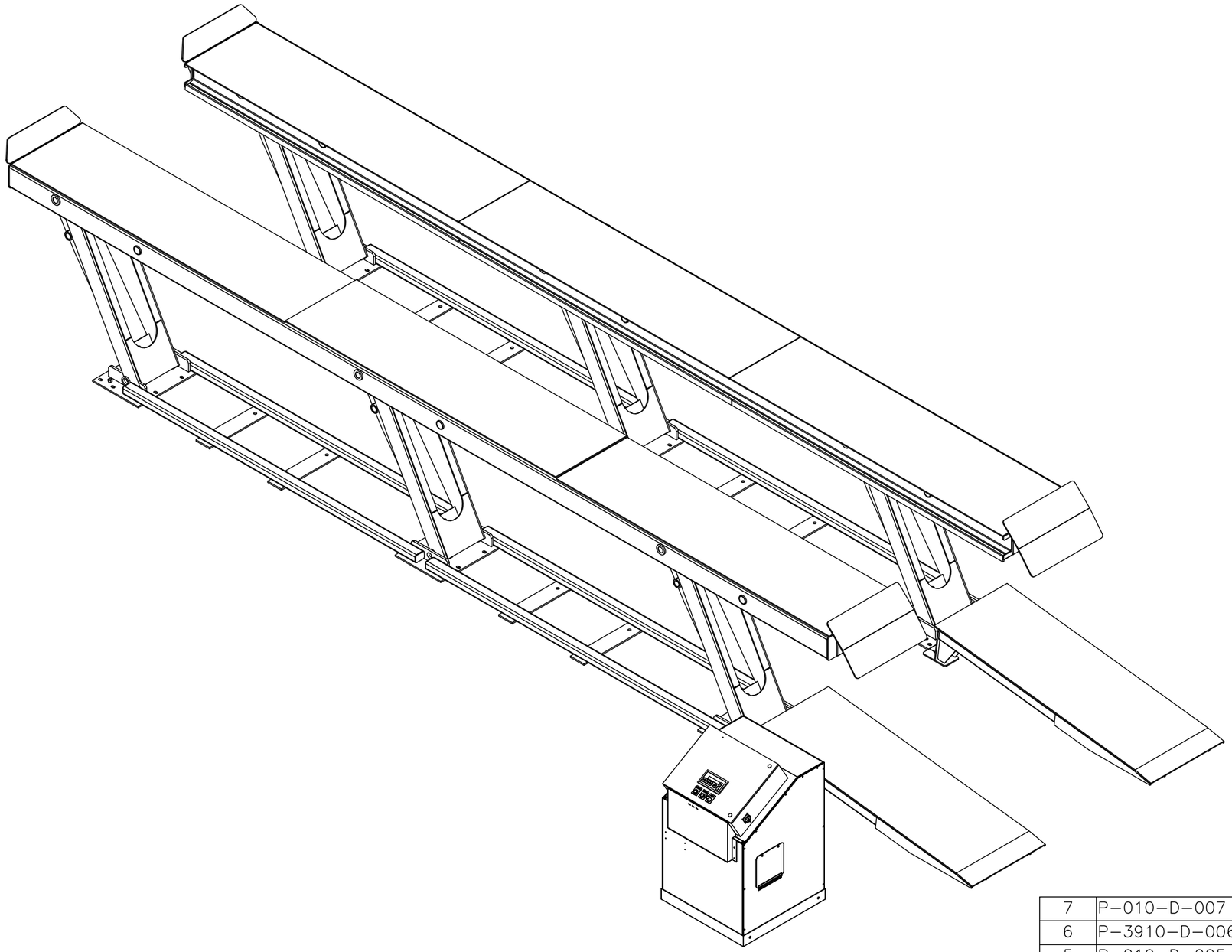

45-35-SURFACE

PAGE 1 of 2

ITEM	NAME	DESCRIPTION	QTY
7	P-010-D-007	Surface Installation General Notes	1
6	P-3910-D-006	45-35-Surface Lift Data Table	1
5	P-010-D-005	Service Leg Conduit Details	1
4	P-010-D-004	Anchor Details & Shimming	1
3	P-010-D-003	Control Console & Stub-Up Details	1
2	P-010-D-002	Lift & Console Conduit Locations, Section Views	1
1	P-3910-D-001	45-35-Surface Standard Console Location Layout	1

NOTICE OF CONFIDENTIAL INFORMATION

INFORMATION CONTAINED HEREIN IS CONFIDENTIAL AND PROPERTY OF MOHAWK RESOURCES LTD.. WHERE DRAWING IS FURNISHED TO OTHERS IT SHALL BE USED SOLELY FOR PURPOSES OF INSPECTION, INSTALLATION, OR MAINTENANCE. THE INFORMATION SHALL NOT BE USED OR DISCLOSED BY THE RECIPIENT FOR ANY OTHER PURPOSES WHATSOEVER.

NOTES:
1. REMOVE ALL SHARP CORNERS & EDGES.
2. UNLESS OTHERWISE SPECIFIED, SURFACE FINISH TO BE 125 RMS.
3. WELDING MEDIUM SHALL CONFORM TO AWS SPECIFICATIONS TO E-70XX ELECTRODES OR E-70TI CODE 5.3 FLUX CORE WIRE ONLY.

TOLERANCES:
ANGULAR ± 1°
FRACTIONAL ± .030
DECIMAL:
0.XX ± .030
0.XXX ± .005

FILE NAME *P-3910-A-001*

P-3910-

NEXT ASSEMBLY

SCALE	DRAWN	MOHAWK RESOURCES LTD.
7/64	*dak*	
CHECKED	APPROVED	TITLE *INSTALLATION REQUIREMENTS DRAWING, 45-35-SURFACE*
DATE *9/09*	WEIGHT LB.	FROM / DRAWING NUMBER *P-3910-A-001*

D-SIZE

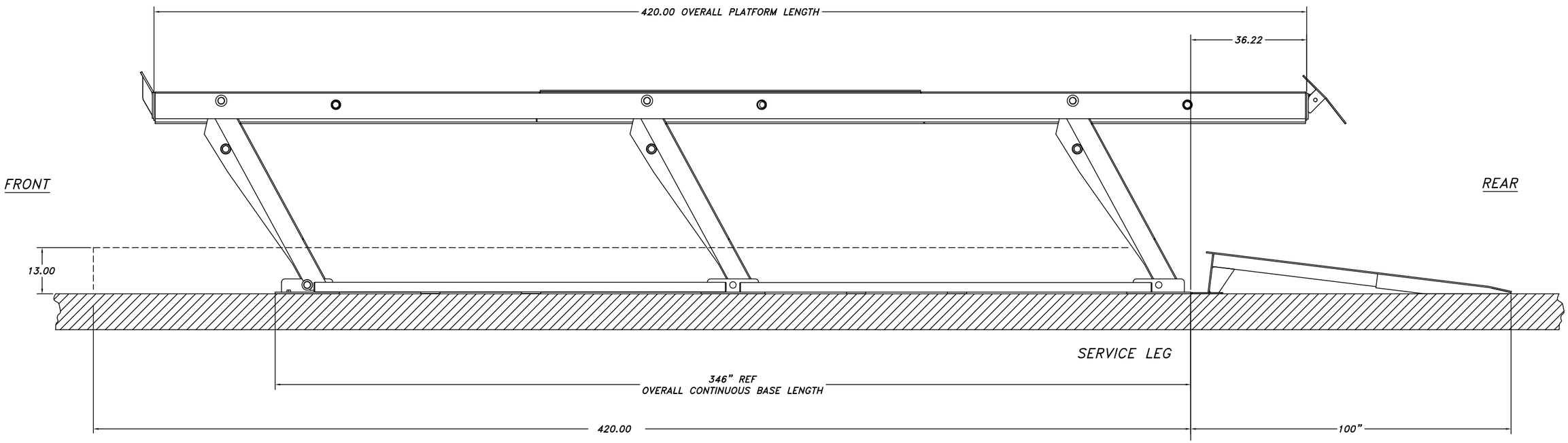

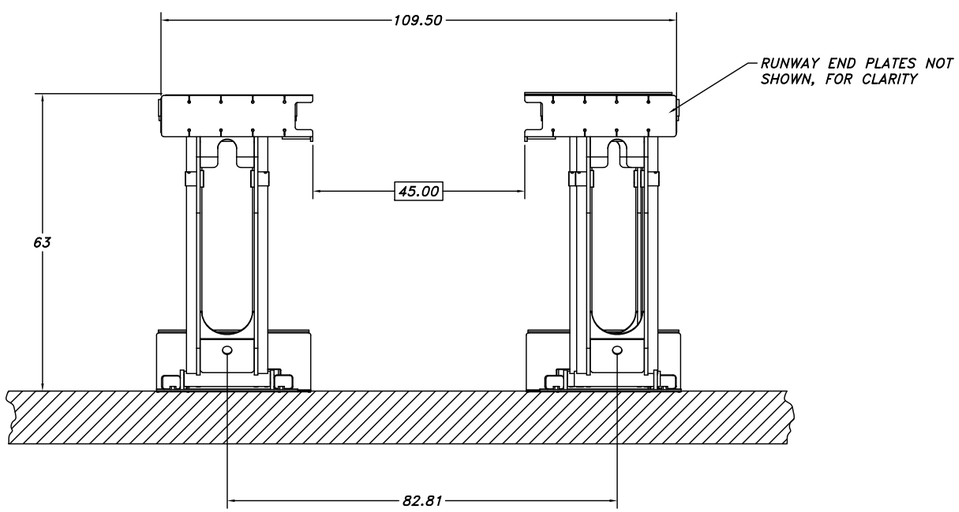

SURFACE MOUNTED CONTINUOUS BASE INSTALLATION

THIS CONFIGURATION IS MOST OFTEN USED FOR FLEET MAINTENANCE, REPAIR AND SERVICE APPLICATIONS.

THE LIFT UNIT TRANSLATES TO THE REAR APPROXIMATELY 36 1/8" DURING THE VERTICAL ARTICULATION.

45-35-SURFACE

PAGE 2 of 2

D-SIZE

FRONT ELEVATION VIEW

NOTICE OF CONFIDENTIAL INFORMATION

INFORMATION CONTAINED HEREIN IS CONFIDENTIAL AND PROPERTY OF MOHAWK RESOURCES LTD., WHERE DRAWING IS FURNISHED TO OTHERS IT SHALL BE USED SOLELY FOR PURPOSES OF INSPECTION, INSTALLATION, OR MAINTENANCE. THE INFORMATION SHALL NOT BE USED OR DISCLOSED BY THE RECIPIENT FOR ANY OTHER PURPOSES WHATSOEVER.

NOTES:
1. REMOVE ALL SHARP CORNERS & EDGES.
2. UNLESS OTHERWISE SPECIFIED, SURFACE FINISH TO BE 125 RMS.
3. WELDING MEDIUM SHALL CONFORM TO AWS SPECIFICATIONS TO E-70XX ELECTRODES OR E-70TI CODE 5.3 FLUX CORE WIRE ONLY.

TOLERANCES:
ANGULAR ± 1°
FRACTIONAL ± .030
DECIMAL:
0.XX ± .030
0.XXX ± .005

FILE NAME P-3910-A-001

P-3910-

NEXT ASSEMBLY

SCALE 1/16	DRAWN dak	MOHAWK RESOURCES LTD.	
CHECKED	APPROVED	TITLE INSTALLATION REQUIREMENTS DRAWING, 45-35-SURFACE	
DATE 9/09	WEIGHT LB.	FROM	DRAWING NUMBER P-3910-A-001

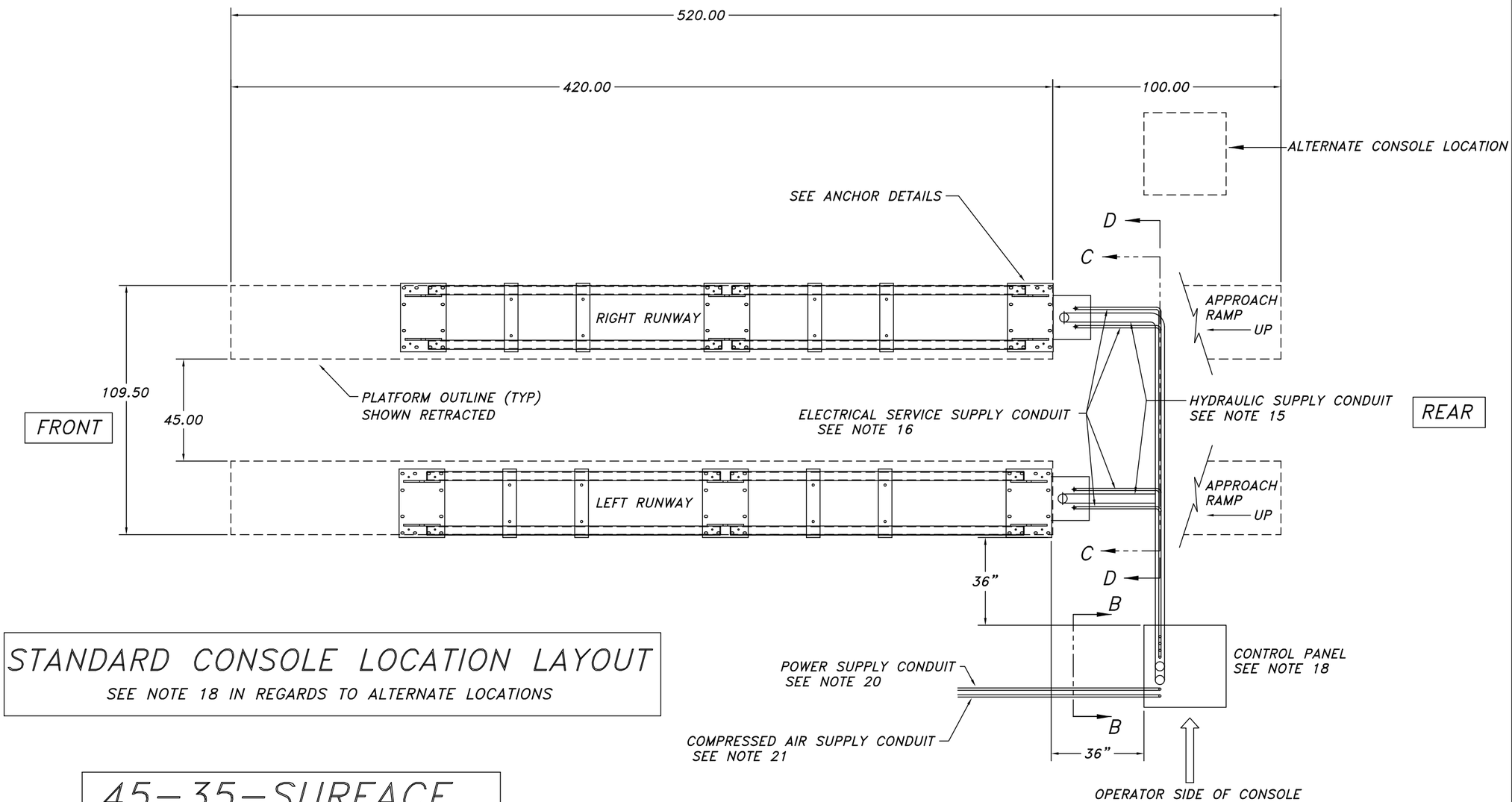

STANDARD CONSOLE LOCATION LAYOUT

SEE NOTE 18 IN REGARDS TO ALTERNATE LOCATIONS

45-35-SURFACE

C-SIZE

NOTICE OF CONFIDENTIAL INFORMATION

INFORMATION CONTAINED HEREIN IS CONFIDENTIAL AND PROPERTY OF MOHAWK RESOURCES LTD.. WHERE DRAWING IS FURNISHED TO OTHERS IT SHALL BE USED SOLELY FOR PURPOSES OF INSPECTION, INSTALLATION, OR MAINTENANCE. THE INFORMATION SHALL NOT BE USED OR DISCLOSED BY THE RECIPIENT FOR ANY OTHER PURPOSES WHATSOEVER.

NOTES:
1. REMOVE ALL SHARP CORNERS & EDGES.
2. UNLESS OTHERWISE SPECIFIED, SURFACE FINISH TO BE 125 RMS.
3. WELDING MEDIUM SHALL CONFORM TO AWS SPECIFICATIONS TO E-70XX ELECTRODES OR E-70TI CODE 5.3 FLUX CORE WIRE ONLY.

TOLERANCES:
ANGULAR ± 1°
FRACTIONAL ± .030
DECIMAL:
0.XX ± .030
0.XXX ± .005

FILE NAME P-3910-D-001

P-3910-A-001

NEXT ASSEMBLY

SCALE	DRAWN	MOHAWK RESOURCES LTD.	
1'0"=1'0"	dak		
CHECKED	APPROVED	TITLE 45-35-SURFACE STANDARD CONSOLE LOCATION LAYOUT	
DATE 9/09	WEIGHT LB.	FROM	DRAWING NUMBER P-3910-D-001

LIFT & CONSOLE SUBGRADE CONDUIT LOCATIONS, SECTION VIEWS

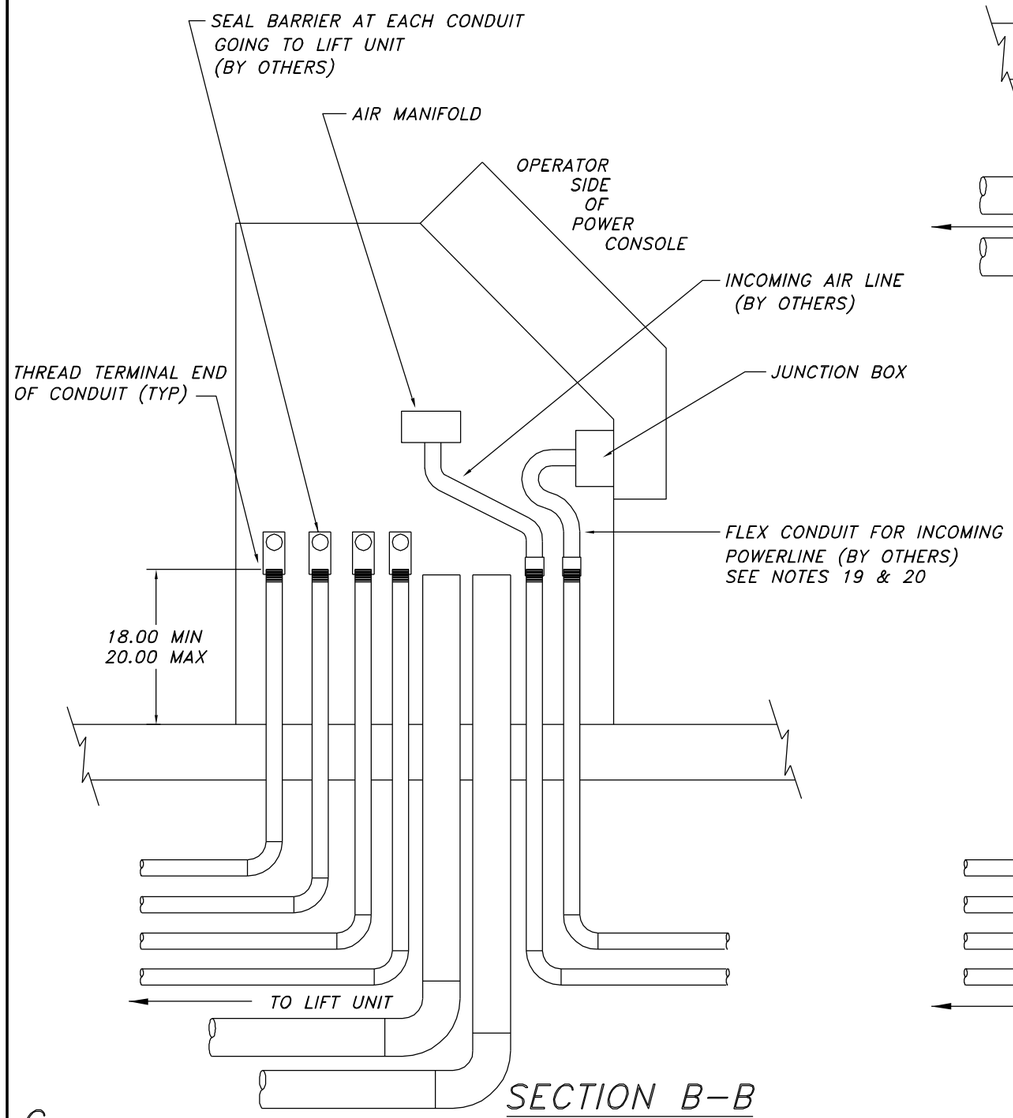

SECTION B–B

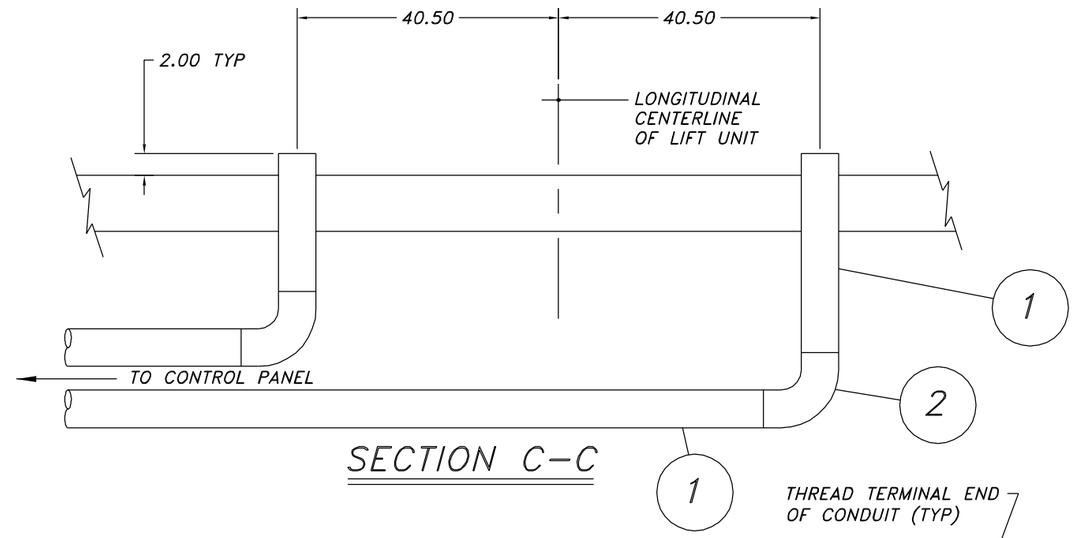

SECTION C–C

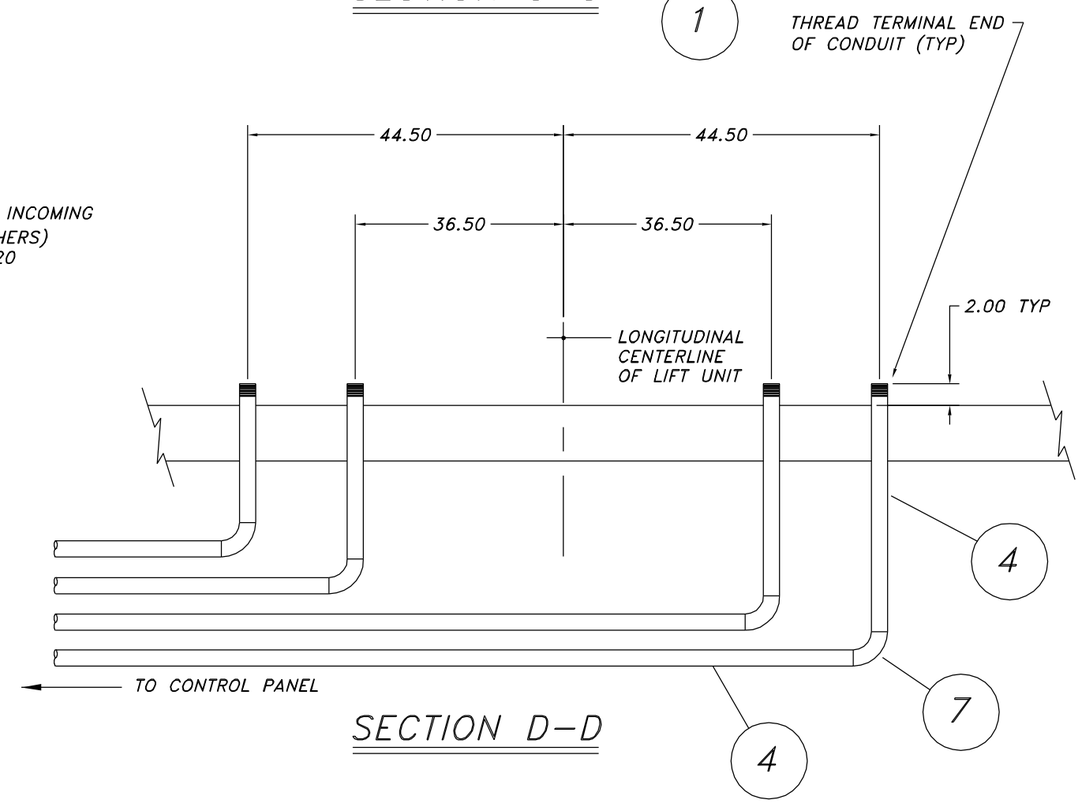

SECTION D–D

C-SIZE

NOTICE OF CONFIDENTIAL INFORMATION

INFORMATION CONTAINED HEREIN IS CONFIDENTIAL AND PROPERTY OF MOHAWK RESOURCES LTD.. WHERE DRAWING IS FURNISHED TO OTHERS IT SHALL BE USED SOLELY FOR PURPOSES OF INSPECTION, INSTALLATION, OR MAINTENANCE. THE INFORMATION SHALL NOT BE USED OR DISCLOSED BY THE RECIPIENT FOR ANY OTHER PURPOSES WHATSOEVER.

NOTES:
1. REMOVE ALL SHARP CORNERS & EDGES.
2. UNLESS OTHERWISE SPECIFIED, SURFACE FINISH TO BE 125 RMS.
3. WELDING MEDIUM SHALL CONFORM TO AWS SPECIFICATIONS TO E-70XX ELECTRODES OR E-70TI CODE 5.3 FLUX CORE WIRE ONLY.

TOLERANCES:
ANGULAR ± 1°
FRACTIONAL ± .030
DECIMAL:
0.XX ± .030
0.XXX ± .005

FILE NAME P-010-D-002

P-010-A-001

NEXT ASSEMBLY

SCALE	DRAWN dak	MOHAWK RESOURCES LTD.	
CHECKED	APPROVED	TITLE LIFT & CONSOLE CONDUIT LOCATIONS, SECTION VIEWS	
DATE 4/03	WEIGHT LB.	FROM	DRAWING NUMBER P-010-D-002

#	DESCRIPTION	DATE	APPROVED
A	Metric units added	06/22/2004	rwv7089

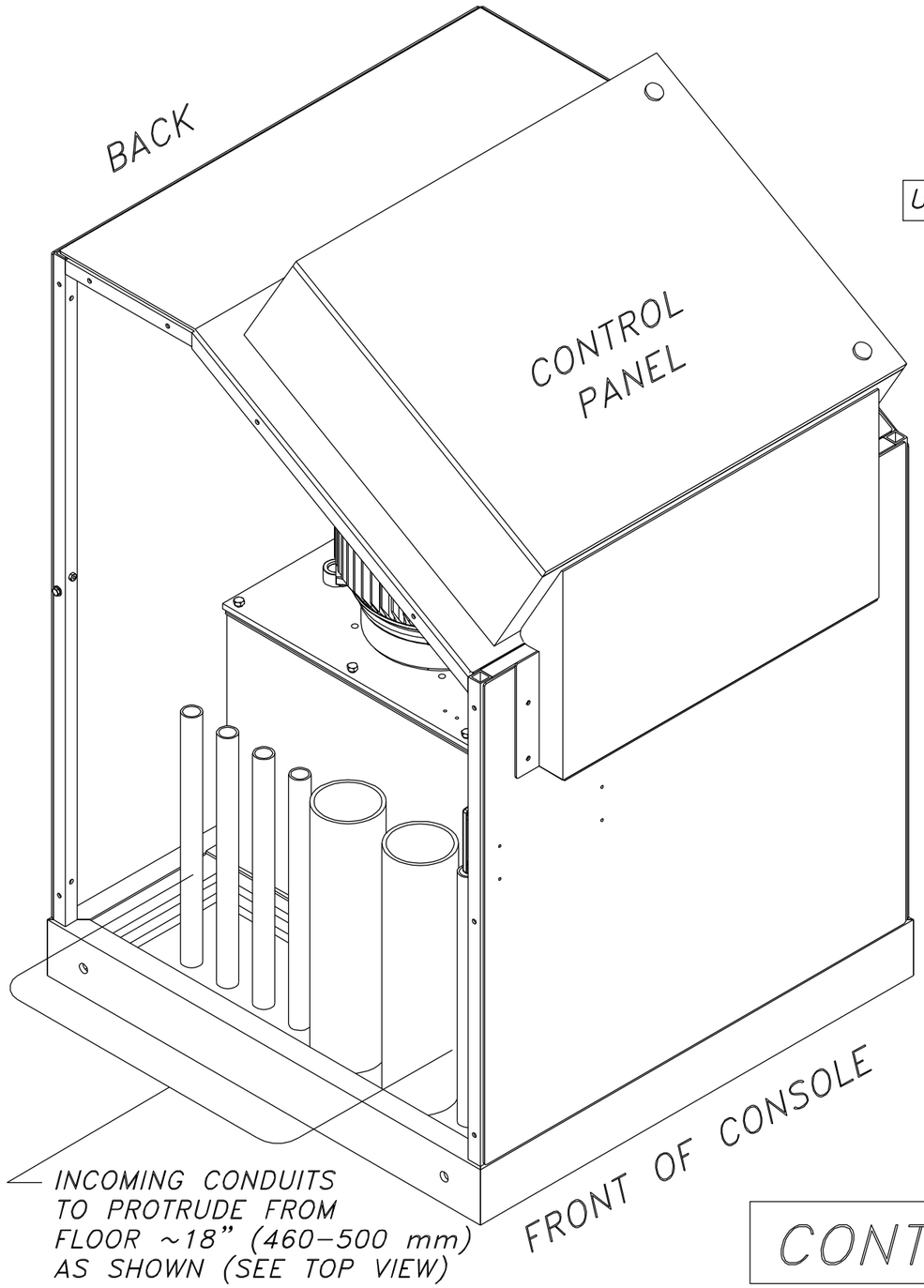

TOP VIEW OF CONSOLE FRAME

UNITS = INCH (mm)

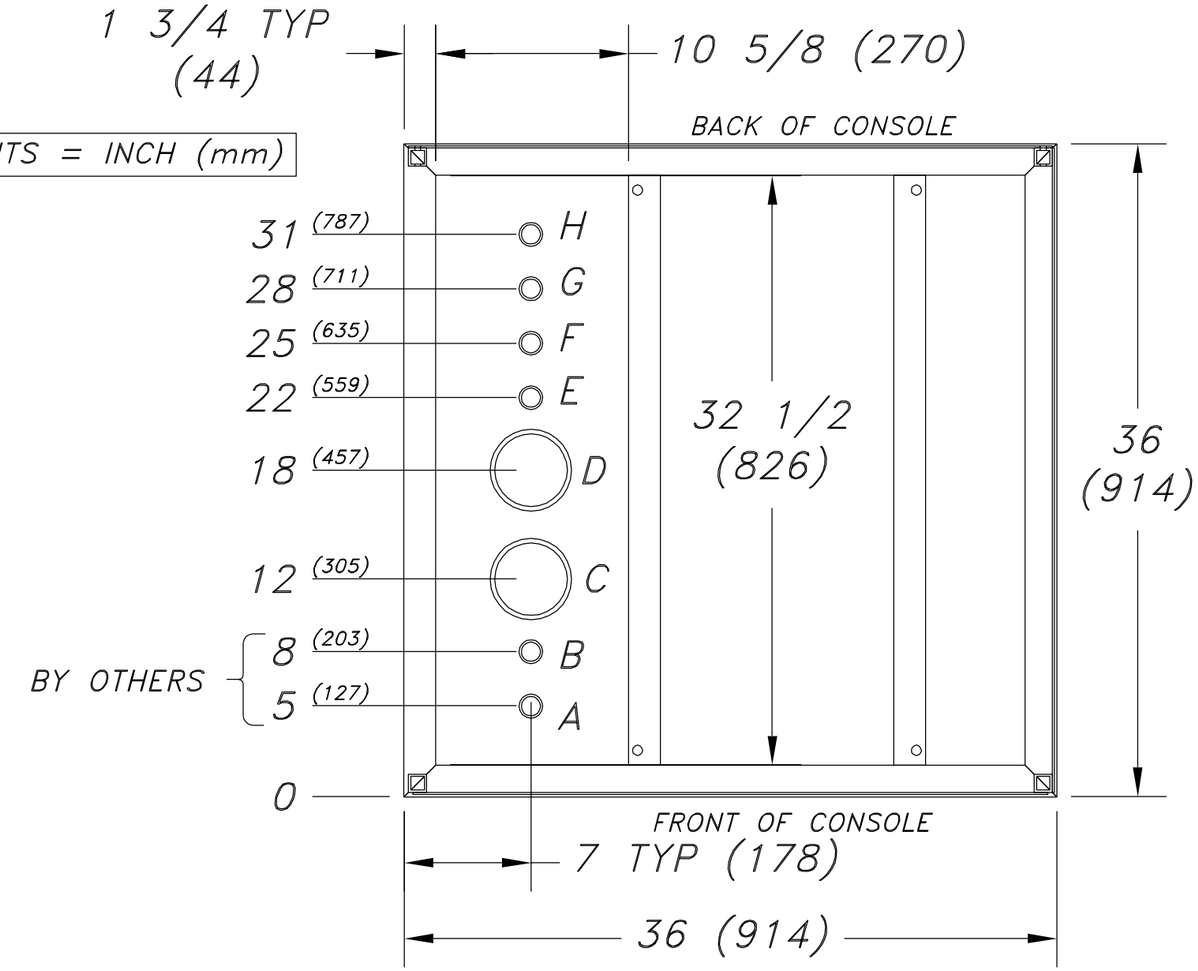

CONDUIT SIZES & APPLICATION:

A:	1" (MIN) SCHED 40 STEEL PIPE – INCOMING POWER	CUSTOMER PREFERENCE OPTIONAL
B:	1" (MIN) SCHED 40 STEEL PIPE – INCOMING AIRLINE	
C,D:	4" SCHED 40 PVC PIPE – HYDRAULIC & AIR TO LIFT	
E,F,G,H:	1" (MIN) SCHED 40 STEEL PIPE – ELECTRICAL TO LIFT	

* NOTE: USE SMOOTH ELECTRICAL 90'S IN CONDUITS, NOT PLUMBING 90'S !!

CONTROL CONSOLE & STUB-UP DETAILS

NOTICE OF CONFIDENTIAL INFORMATION

INFORMATION CONTAINED HEREIN IS CONFIDENTIAL AND PROPERTY OF MOHAWK RESOURCES LTD.. WHERE DRAWING IS FURNISHED TO OTHERS IT SHALL BE USED SOLELY FOR PURPOSES OF INSPECTION, INSTALLATION, OR MAINTENANCE. THE INFORMATION SHALL NOT BE USED OR DISCLOSED BY THE RECIPIENT FOR ANY OTHER PURPOSES WHATSOEVER.

NOTES:
1. REMOVE ALL SHARP CORNERS & EDGES.
2. UNLESS OTHERWISE SPECIFIED, SURFACE FINISH TO BE 125 RMS.
3. WELDING MEDIUM SHALL CONFORM TO AWS SPECIFICATIONS TO E-70XX ELECTRODES OR E-70T1 CODE 5.3 FLUX CORE WIRE ONLY.

TOLERANCES:
ANGULAR ± 1°
FRACTIONAL ± .030
DECIMAL:
0.XX ± .030
0.XXX ± .005

FILE NAME P-010-D-003

P-010-A-001

NEXT ASSEMBLY

SCALE	DRAWN dak	MOHAWK RESOURCES LTD.	
CHECKED	APPROVED	TITLE CONTROL CONSOLE & STUB-UP DETAILS	
DATE 4/03	WEIGHT LB.	FROM	DRAWING NUMBER P-010-D-003

A

D-SIZE

ANCHOR DETAILS & SHIMMING

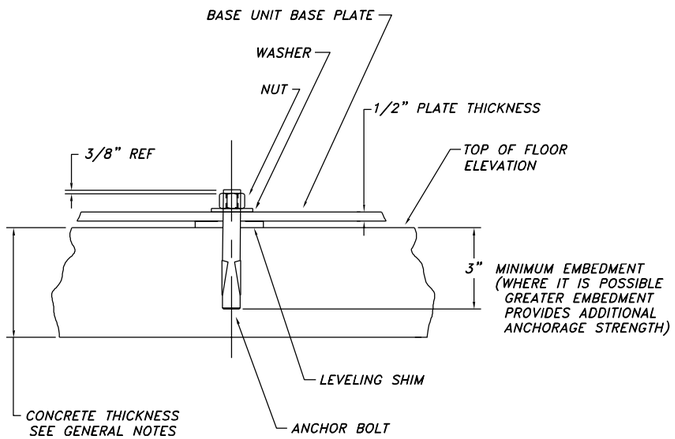

ANCHOR BOLT DETAIL

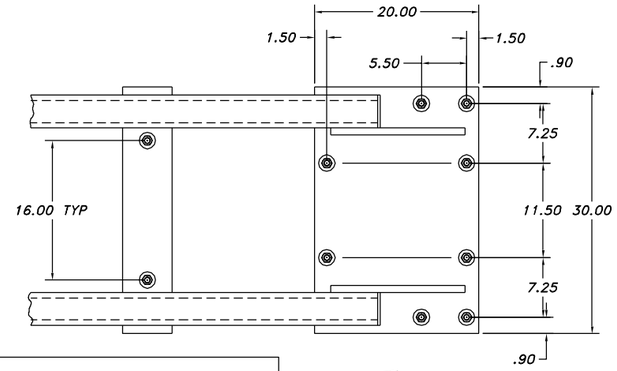

ANCHOR BOLT LOCATION DIMENSIONS AND DETAILS

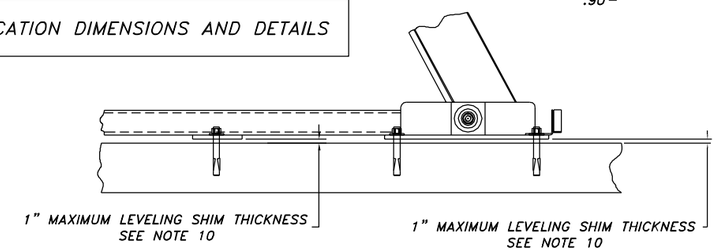

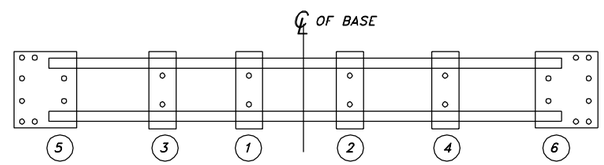

REPRESENTATIVE TIGHTENING SEQUENCE FOR ANCHOR BOLTS

TIGHTENING FROM CENTER OF BASE OUTWARD

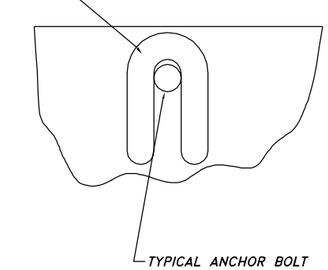

THE MAXIMUM THICKNESS OF ANY STACK OF SHIMS IS 1"
SEE NOTES 9 & 10

PLACEMENT OF LEVELING SHIM DETAIL

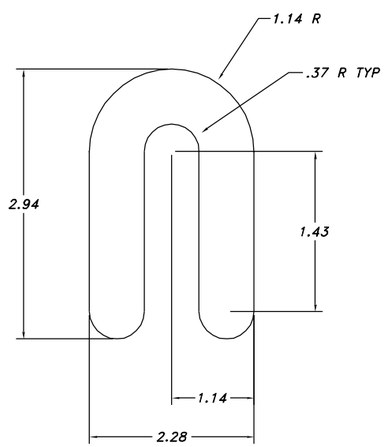

LEVELING SHIMS ARE AVAILABLE IN A RANGE OF THICKNESSES FROM 1/16", 1/8", & 1/4"

LEVELING SHIM DETAIL

INSTALLATION INSTRUCTIONS

1. DRILL THE HOLE PERPENDICULAR TO THE WORK SURFACE. *TO ASSURE FULL HOLDING POWER, DO NOT REAM THE HOLE OR ALLOW THE DRILL TO WOBBLE.

2. DRILL THE HOLE DEEPER THAN THE INTENDED EMBEDMENT OF THE ANCHOR, BUT NOT CLOSER THAN TWO ANCHOR DIAMETERS TO THE BOTTOM (OPPOSITE) SURFACE OF THE CONCRETE.

3. CLEAN THE HOLE USING COMPRESSED AIR AND A NYLON BRUSH. A CLEAN HOLE IS NECESSITY FOR PROPER PERFORMANCE.

4. TURN THE NUT ONTO THE ANCHOR UNTIL CONTACT IS MADE WITH THE TOP OF THE SPEARS AND THE BOTTOM OF THE WASHER. INSERT ANCHOR INTO HOLE.

5. TAP ANCHOR INTO HOLE WITH A 2 1/2 LBS HAMMER UNTIL WASHER RESTS SOLIDLY AGAINST FIXTURE.

6. TIGHTEN THE NUT TO 175 FT-LBS MAXIMUM TORQUE AND NOT LESS THAN 3 FULL TURNS, BUT NOT MORE THAN 5 TURNS PAST THE HAND TIGHT POSITION. (USE OF AN IMPACT WRENCH FOR INSTALLATION OF ANCHORS IS NOT RECOMMENEDED)

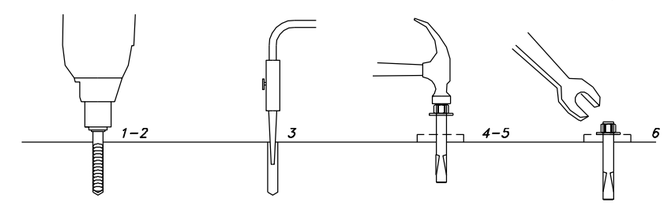

*ALWAYS WEAR SAFETY GLASSES. FOLLOW THE DRILL MANUFACTURER'S SAFETY INSTRUCTIONS. USE ONLY SOLID CARBIDE-TIPPED DRILL BITS MEETING ANSI B212.15 DIAMETER STANDARDS.

APPROVED ANCHOR BOLTS PROVIDED BY MOHAWK LIFT

ANCHOR BOLTS ARE MANUFACTURED BY

WEJ-IT FASTENING SYSTEMS
2415 EAST 13TH PLACE
TULSA, OKLAHOMA 74104

PHONE 918-744-7444
OR 800-343-1264

WEB SITE WWW.WEJIT.COM

ANCHORS SPECIFIED ARE: "THE ORIGINAL WEJ-IT" EXPANSION ANCHORS, 3/4 DIA

CATALOG NUMBER	LENGTH
3460	6"
3482	8 1/2"
3410	10"

NO OTHER ANCHOR BOLT SUBSTITUTIONS ARE PERMITTED WITHOUT WRITTEN APPROVAL FROM MOHAWK RESOURCES, LTD. UNDER CERTAIN CIRCUMSTANCES EPOXY GROUTED THREADED ROD ANCHORAGE MAY BE USED BUT ANY USE OF SUCH REQUIRES WRITTEN APPROVAL OF MOHAWK RESOURCES, LTD. ANY OTHER UNAPPROVED ANCHOR BOLT PRODUCT MAY NOT HAVE THE DOCUMENTED STRENGTH TO MEET THE CERTIFICATION REQUIREMENTS OF THE AUTOMOTIVE LIFT INSTITUTE AND MAY AFFECT THE CERTIFICATION OF THE INSTALLATION.

NOTICE OF CONFIDENTIAL INFORMATION

INFORMATION CONTAINED HEREIN IS CONFIDENTIAL AND PROPERTY OF MOHAWK RESOURCES LTD., WHERE DRAWING IS FURNISHED TO OTHERS IT SHALL BE USED SOLELY FOR PURPOSES OF INSPECTION, INSTALLATION, OR MAINTENANCE. THE INFORMATION SHALL NOT BE USED OR DISCLOSED BY THE RECIPIENT FOR ANY OTHER PURPOSES WHATSOEVER.

NOTES:
1. REMOVE ALL SHARP CORNERS & EDGES.
2. UNLESS OTHERWISE SPECIFIED, SURFACE FINISH TO BE 125 RMS.
3. WELDING MEDIUM SHALL CONFORM TO AWS SPECIFICATIONS TO E-70XX ELECTRODES OR E-70T1 CODE 5.3 FLUX CORE WIRE ONLY.

TOLERANCES:
ANGULAR ± 1°
FRACTIONAL ± .030
DECIMAL:
0.XX ± .030
0.XXX ± .005

FILE NAME P-010-D-004

P-010-A-001

NEXT ASSEMBLY

SCALE	DRAWN dak	MOHAWK RESOURCES LTD.
CHECKED	APPROVED	TITLE ANCHOR DETAILS & SHIMMING
DATE 4/03	WEIGHT LB.	FROM / DRAWING NUMBER P-010-D-004

D-SIZE

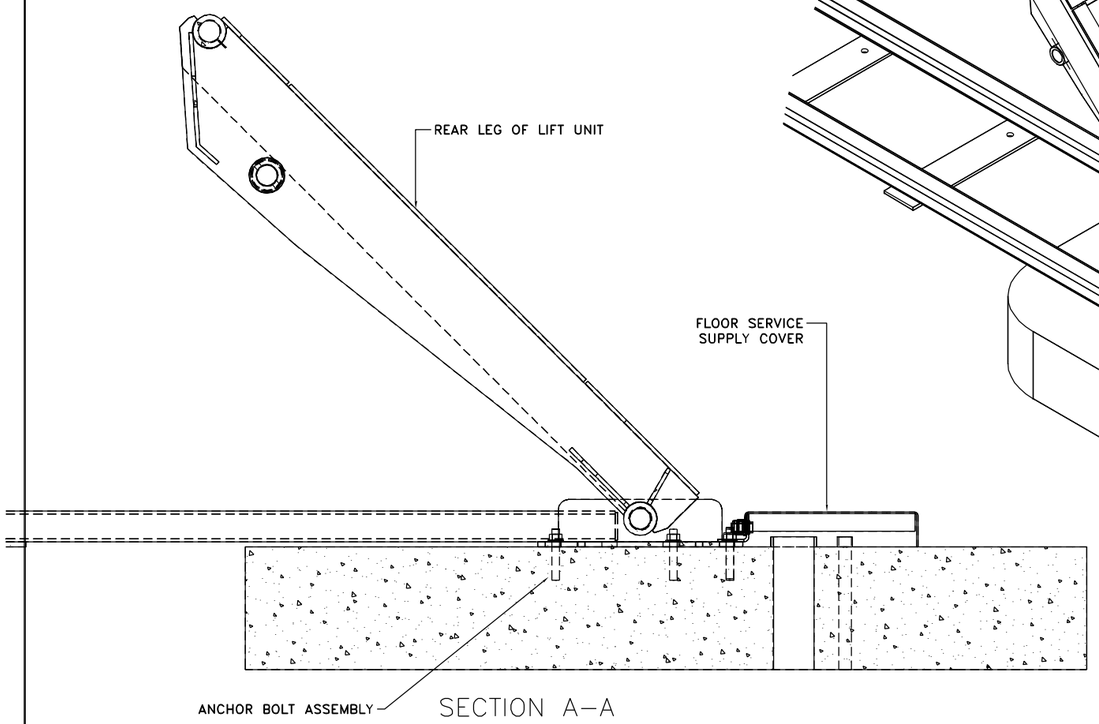

SECTION A–A

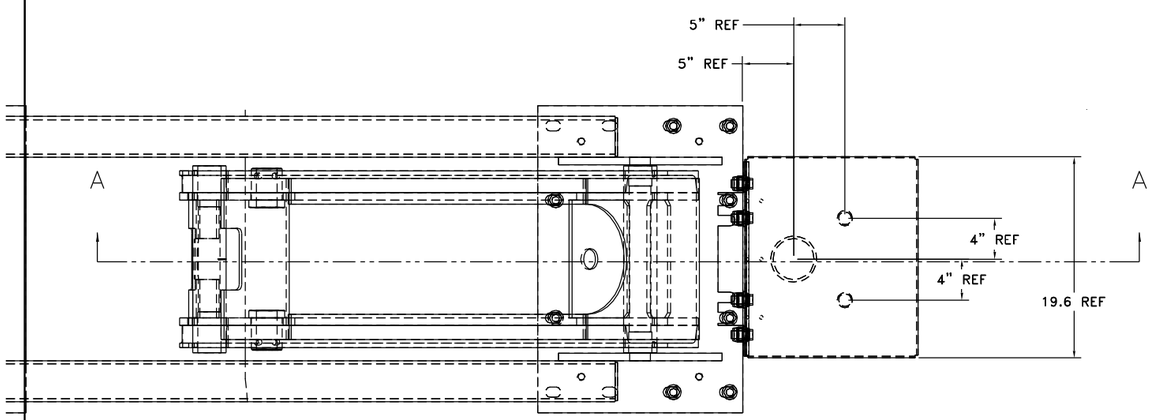

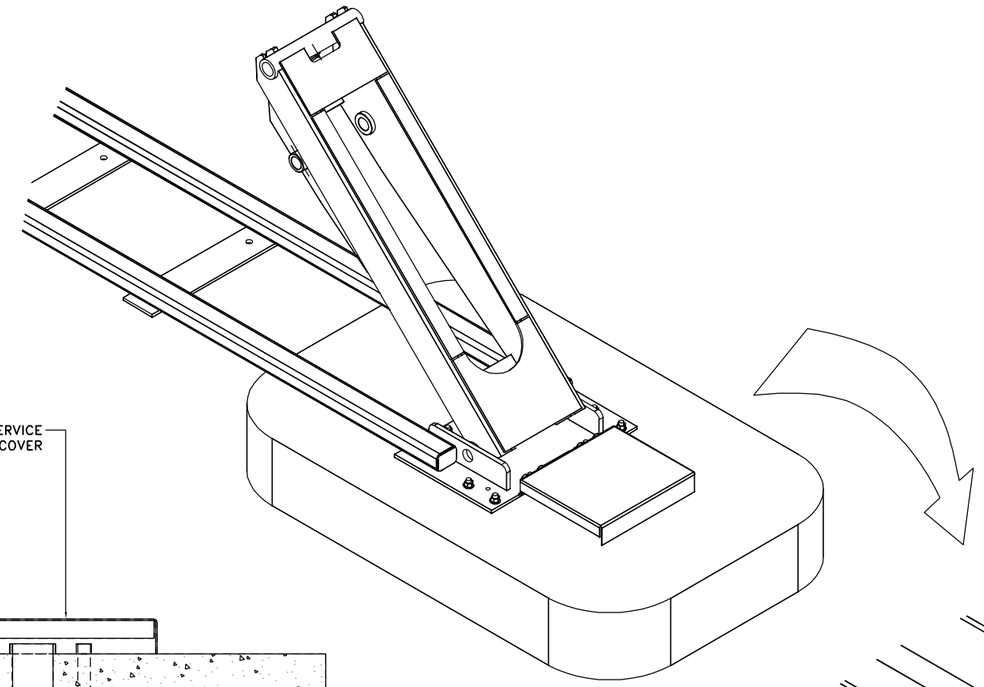

ISOMETRIC VIEW OF SERVICE CONNECTIONS AND ROUTING

NOTE: LEFT HAND (DRIVER'S SIDE) SHOWN. MIRROR THIS VIEW FOR RIGHT HAND SIDE.

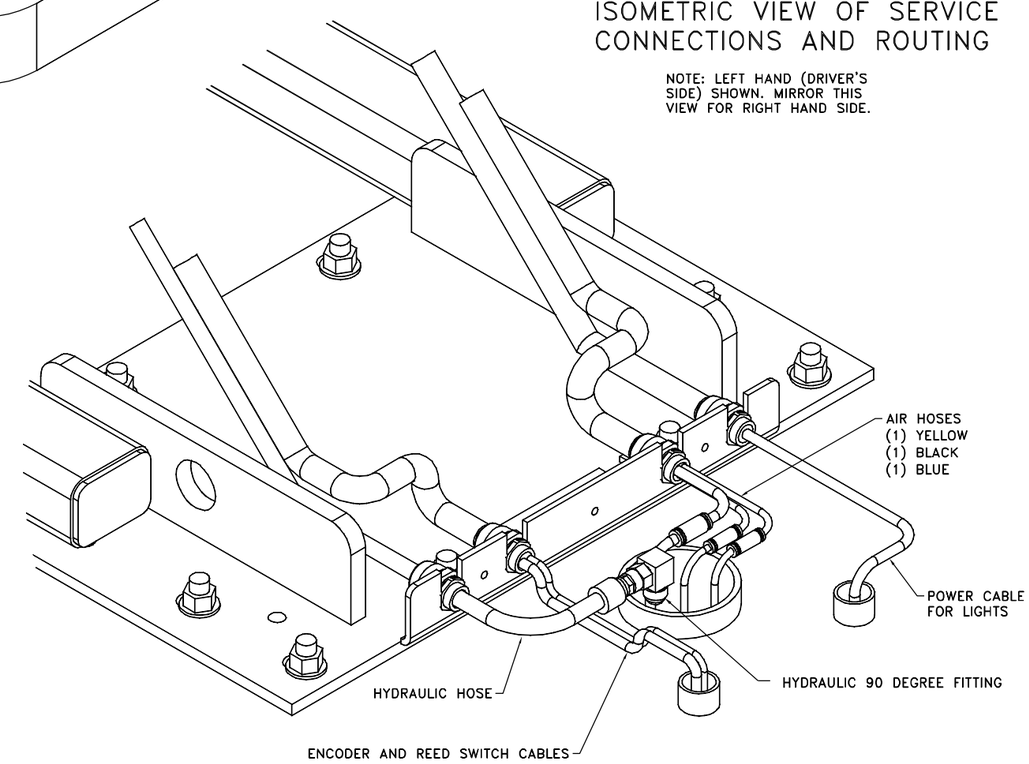

D-SIZE

NOTICE OF CONFIDENTIAL INFORMATION

INFORMATION CONTAINED HEREIN IS CONFIDENTIAL AND PROPERTY OF MOHAWK RESOURCES LTD.. WHERE DRAWING IS FURNISHED TO OTHERS IT SHALL BE USED SOLELY FOR PURPOSES OF INSPECTION, INSTALLATION, OR MAINTENANCE. THE INFORMATION SHALL NOT BE USED OR DISCLOSED BY THE RECIPIENT FOR ANY OTHER PURPOSES WHATSOEVER.

NOTES:
1. REMOVE ALL SHARP CORNERS & EDGES.
2. UNLESS OTHERWISE SPECIFIED, SURFACE FINISH TO BE 125 RMS.
3. WELDING MEDIUM SHALL CONFORM TO AWS SPECIFICATIONS TO E-70XX ELECTRODES OR E-70TI CODE 5.3 FLUX CORE WIRE ONLY.

TOLERANCES:
ANGULAR ± 1 °
FRACTIONAL ± .030
DECIMAL:
0.XX ± .030
0.XXX ± .005

FILE NAME P-010-D-005

P-010-A-001

NEXT ASSEMBLY

SCALE	DRAWN	MOHAWK RESOURCES LTD.
1/8	rwv7089	
CHECKED	APPROVED	TITLE Parallelogram Installation Service Leg Conduit Details
DATE 4/15/03	WEIGHT n/a LB.	FROM n/a
		DRAWING NUMBER P-010-D-005

LIFT DATA TABLE

MOHAWK RESOURCES, LTD

PARALELLOGRAM LIFT MODEL
45-35-SURFACE

LIFT UNIT DATA	--
MAXIMUM LOAD CAPACITY (LBS)	45,000
ANCHORAGE	--
ANCHOR BOLT DIAMETER (IN.)	3/4"
TOTAL NUMBER OF ANCHOR BOLTS	56
BOLT PATTERN	SEE ANCHOR DETAILS
ANCHOR BOLT SETTING TORQUE	N/A- SEE ANCHOR DETAILS
MINIMUM EMBEDMENT LENGTH (IN.)	3.00
MINIMUM CONCRETE THICKNESS (IN.)	6" ON GRADE (SEE NOTE 23)
HYDRAULIC	--
RESERVOIR CAPACITY (GAL)	30 TOTAL
OIL TYPE	DEXRON III (ATF)
ELECTRICAL	--
MOTOR HORSEPOWER	20
208/230 V 3 PH	60 AMPERE
or 460 V 3 PH	30 AMPERE
CONTROL CIRCUIT TRANSFORMER 1000 VA	7.69 AMP
24 VDC POWER SUPPLY	4.8 AMP
LIGHT FIXTURES (OPTIONAL LIGHTING KIT) QTY	8
SHOP AIR	--
AIR PRESSURE (PSI)	85 to 100
AIR VOLUME- LIFT (CFM)(LOCKS)	5
AIR VOLUME- OPTIONAL ROLLING JACK (CFM)	25 EACH
AIR VOLUME- OPTIONAL SHOP AIR KIT (CFM)	20
AIR VOLUME- TOTAL REQ'D CAPACITY (CFM)	30 MINIMUM
AIR VOLUME- TOTAL REQ'D CAPACITY (CFM)	50 SUGGESTED

REQUIRED MATERIAL LIST

MATERIALS SHOWN ON THIS LIST SHALL BE USED WITHOUT SUBSTITION UNLESS SPECIFICALLY APPROVED IN WRITING BY MOHAWK RESOURCES, LTD.

ITEM	QTY	DESCRIPTION	MATERIAL
12	1	LOCKOUT/TAGOUT DISCONNECT BOX	PER LOCAL ELECTRICAL CODES
11*	AR	LEVELING SHIMS	1/16", 1/8", 1/4" THICK
10*	48	3/4" x 5" ANCHOR BOLT ASSEMBLY	WEJ-IT - WEDGE ANCHORS
9	4	1" SEAL BARRIER	CROUSE - HINDS EYS3
8	4	1-3/4" REDUCER BUSHING	CROUSE - HINDS RE32
7	4	1" SCH 40-90 DEG ELBOW	CROUSE - HINDS EL3
6*	1	JUNCTION BOX (IN CONSOLE)	STEEL
5	AR	SEALTITE FLEXIBLE CONDUIT	METAL CORE
4	AR	1" RIGID CONDUIT	STEEL
3	1	FILTER/LUBRICATOR/REGULATOR, DRYER SHUTOFF	
2	AR	4" SCH 40 STREET ELBOW	STEEL or PVC
1	AR	4" SCH 40 PIPE	STEEL or PVC
		* ITEMS SUPPLIED BY MOHAWK WITH THE LIFT UNIT	

D-SIZE

NOTICE OF CONFIDENTIAL INFORMATION

INFORMATION CONTAINED HEREIN IS CONFIDENTIAL AND PROPERTY OF MOHAWK RESOURCES LTD.. WHERE DRAWING IS FURNISHED TO OTHERS IT SHALL BE USED SOLELY FOR PURPOSES OF INSPECTION, INSTALLATION, OR MAINTENANCE. THE INFORMATION SHALL NOT BE USED OR DISCLOSED BY THE RECIPIENT FOR ANY OTHER PURPOSES WHATSOEVER.

NOTES:
1. REMOVE ALL SHARP CORNERS & EDGES.
2. UNLESS OTHERWISE SPECIFIED, SURFACE FINISH TO BE 125 RMS.
3. WELDING MEDIUM SHALL CONFORM TO AWS SPECIFICATIONS TO E-70XX ELECTRODES OR E-70TI CODE 5.3 FLUX CORE WIRE ONLY.

TOLERANCES:
ANGULAR ± 1°
FRACTIONAL ± .030
DECIMAL:
0.XX ± .030
0.XXX ± .005

FILE NAME P-3910-D-006

P-3910-A-001

NEXT ASSEMBLY

SCALE	DRAWN dak	MOHAWK RESOURCES LTD.
CHECKED	APPROVED	TITLE 35-35-SURFACE LIFT DATA TABLE
DATE 9/09	WEIGHT LB.	FROM / DRAWING NUMBER P-3910-D-006

GENERAL NOTES

NOTE 1
IF THE EXISTING CONCRETE FLOOR HAS A DOCUMENTED MINIMUM STRENGTH OF NOT LESS THAN F'c= 4,000 psi AND IS AT LEAST 6 INCHES THICK, THEN THE FLOOR SYSTEM MAY BE USED WITHOUT ALTERATIONS. GENERALLY ANY FLOOR AREA WHICH IS DESIGNED FOR VEHICLES OF THE SAME WEIGHT AS THE LIFT UNIT MAXIMUM CAPACITY WILL BE ADEQUATE FOR INSTALLATION OF THE LIFT UNIT. LIFT UNIT CONTACT PRESSURES WILL BE EQUAL TO OR LESS THAN THE WHEEL CONTACT PRESSURES.

NOTE 2
IF THE CONCRETE FLOOR SYSTEM DOES NOT MEET MINIMUM SPECIFICATIONS OF NOTE 1 ABOVE, THEN A NEW CONCRETE FLOOR SHALL BE INSTALLED TO SUPPORT THE LIFT.

NOTE 3
IF THE STRENGTH OF AN EXISTING FLOOR SYSTEM IS UNKNOWN OR NOT DOCUMENTED, ITS STRENGTH SHOULD BE DETERMINED. CORE SAMPLES SHOULD BE TAKEN TO DETERMINE THE STRENGTH OF THE FLOOR.

NOTE 4
ANY NEW CONCRETE USED FOR REPAIRS OR ALTERATIONS TO THE FLOOR SYSTEM SHALL BE AT A MINIMUM F'c=4,000 psi, WITH HEAVY AGGREGATE. FOR ANY NEW CONCRETE IT SHALL REACH ITS FULL 28 DAY F'c STRENGTH BEFORE THE LIFT AND THE ANCHOR BOLTS ARE INSTALLED.

NOTE 5
ANY NEW CONCRETE USED FOR FLOOR REPAIRS OR ALTERATIONS SHALL HAVE REINFORCING AS REQUIRED FOR THE SOIL CONDITIONS AND VEHICLE LOAD LEVEL. THE REINFORCING SHALL BE DETERMINED BY OTHERS. AT A MINIMUM TWO LAYERS OF 6 x 6 10/10 WELDED WIRE FABRIC SHALL BE USED FOR ANY FLOOR REPAIRS. ALSO, FLOOR REPAIRS SHALL BE DOWELED INTO THE EXISTING FLOOR SYSTEM TO PREVENT DIFFERENTIAL SETTLEMENT.

NOTE 6
FOR INSTALLATION IN EXISTING STRUCTURES, AREAS OF THE FLOOR WHICH ARE CUT AND REMOVED FOR SERVICE CONDUIT INSTALLATIONS SHALL BE REPAIRED WITH CONCRETE HAVING MINIMUM STRENGTH OF NOT LESS THAN F'c=4,000 psi, AND IS AT LEAST 9 INCHES THICK IN THE AREAS AROUND AND TO THE REAR OF THE SERVICE LEGS.

NOTE 7
FOR NEW CONSTRUCTION, THE AREAS OF THE FLOOR ALONG THE LIFT RUNWAYS SHOULD BE DEEPENED TO 9 INCHES FOR EASE OF ANCHOR INSTALLATION. ALSO, PROVIDE A MINIMUM 9 INCH THICKNESS AROUND AND TO THE REAR OF THE SERVICE LEGS.

FOR NEW CONSTRUCTION WHERE IN FLOOR RADIANT HEATING TUBES ARE USED, THESE TUBES MAY BE PLACED UNDER THE LIFT AREA PROVIDED THE THE SLAB IS CAST SUFFICIENTLY THICK. A MINIMUM OF 6 INCHES CLEARANCE SHOULD BE PROVIDED FOR ANCHOR BOLTS AND DRILLING ALLOTMENT. THE INSTALLER MUST BE NOTIFIED THAT RADIANT TUBES ARE USED SUCH THAT CARE IS TAKEN NOT TO OVER DRILL THE DEPTH OF THE ANCHORS.

NOTE 8
THE SUPPORT PLATES OF THE CONTINUOUS BASE SHALL NOT BE INSTALLED OVER A CONSTRUCTION JOINT OF THE FLOOR SYSTEM. THE SUPPORT BASE PLATES SHALL NOT BE PLACED NEARER THAN 10 INCHES TO A CONSTRUCTION JOINT OR FREE EDGE OF THE FLOOR SLAB.

NOTE 9
A MAXIMUM OF ONE INCH ANCHOR BOLT SHIM THICKNESS IS PERMITTED. INDIVIDUAL ANCHOR BOLT SHIMS ARE AVAILABLE IN A RANGE OF THICKNESSES.

NOTE 10
WHERE MORE THAN ONE INCH OF SHIM LEVELING IS REQUIRED FULL SUPPORT PLATE CONTACT SHIMS ARE AVAILABLE AT ADDITIONAL COST. THE FULL CONTACT SHIM PLATES SHALL THEN BE ACCURATELY LEVELED USING INDIVIDUAL ANCHOR BOLT SHIMS.

NOTE 11
WEJ-IT FASTENING SYSTEMS, AT WEDGE ANCHORS ARE PROVIDED WITH THE LIFT FOR ANCHORING THE LIFT UNIT TO THE FLOOR SYSTEM. THE NUMBER AND THE SIZE OF ANCHOR BOLTS SPECIFIED IN THE DRAWING MUST BE USED TO ATTACH THE LIFT UNIT. ANCHOR BOLTS OF FULL LENGTH MUST BE USED IN ALL LOCATIONS PROVIDED ON THE BASE OF THE LIFT UNIT.

NOTE 12
IN CERTAIN CASES THE FLOOR SLAB MAY HAVE ADEQUATE STRENGTH TO SUPPORT THE LIFT UNIT BUT MAY NOT BE THICK ENOUGH TO PROVIDE THE MINIMUM EMBEDMENT DEPTH FOR THE AT WEJ-IT ANCHOR BOLTS. FOR THIS SITUATION EPOXY GROUTED ANCHOR RODS MAY BE USED. CONTACT MOHAWK RESOURCES, LTD. FOR WRITTEN APPROVAL OF EPOXY GROUTED ANCHORS AND PROCEDURES AND APPROVED MATERIALS FOR INSTALLING THE LIFT UNIT.

NOTE 13
EXCEPT AS DESCRIBED IN NOTE 7, NO EMBEDDED PLUMBING, TUBES, CONDUITS OR OTHER ITEMS, EXCEPT THE LIFT UNIT SERVICE LEG CONDUITS SHALL BE CLOSER THAN 16 INCHES FROM ANY ANCHOR BOLT. ALSO, THE SERVICE LEG CONDUITS SHALL BE INSTALLED ACCURATELY IN THE LOCATIONS SHOWN IN THE PLAN AND DETAIL VIEWS TO MINIMIZE THE EFFECT ON THE ANCHORAGE.

NOTE 14
NO ANCHOR BOLT SHALL BE INSTALLED CLOSER THAN 10 INCHES FROM ANY FREE EDGE OR FLOOR JOINT.

NOTE 15
PROVIDE TWO, 4 INCH SCH 40 PVC PIPE AS A HYDRAULIC-PNEUMATIC SERVICE SUPPLY CONDUIT RUNNING FROM THE POWER UNIT TO EACH SERVICE LEG.

NOTE 16
PROVIDE 4, 1 INCH SCH 40 STEEL CONDUITS AS ELECTRICAL SERVICE SUPPLY RUNNING FROM THE POWER UNIT TO THE SERVICE LEGS. THESE CONDUITS SHALL BE INSTALLED AS SHOWN ON THE SECTION VIEWS AND MUST BE INSTALLED ACCORDING TO APPLICABLE ELECTRICAL CODES.

NOTE 17
PROVIDE TEMPORARY CAPS FOR ALL CONDUITS AND EMBEDDED PIPES. IT IS RECOMMENDED TO LEAVE PULL ROPES IN CONDUITS FOR EASE OF LIFT INSTALLATION.

NOTE 18
THE CONTROL CONSOLE MUST BE LOCATED IN THE VICINITY OF THE LIFT. IT SHOULD BE PLACED FAR ENOUGH AWAY FROM THE LIFT TO ALLOW FOR ACTIVITIES AROUND THE LIFT. THE ENCLOSED DRAWINGS SHOW THE CONSOLE IN A STANDARD POSITION. THE CONTROL CONSOLE MAY BE LOCATED ON EITHER SIDE AND ANYWHERE ALONG THE LENGTH OF THE LIFT, BUT ANY DEVIATIONS FROM THE ENCLOSED DRAWINGS MAY REQUIRE LONGER CABLES, HOSES, CONDUIT, ETC. ADDITIONAL EXPENSE TO THE PURCHASER.

NOTE 19
THE LIFT UNIT REQUIRES A HIGH VOLTAGE POWER SOURCE. A LOCKOUT/TAGOUT ELECTRICAL DISCONNECT BOX MUST BE PROVIDED FOR THE POWER SOURCE. THE LOCKOUT/TAGOUT DISCONNECT BOX MUST BE INSTALLED ACCORDING TO APPLICABLE ELECTRICAL CODES. THIS ELECTRICAL DISCONNECT IS TO BE PROVIDED BY OTHERS.

NOTE 20
PROVIDE ONE, 1 INCH SCH 40 RIGID STEEL CONDUIT AS ELECTRICAL SERVICE SUPPLY RUNNING FROM THE BUILDING POWER SOURCE TO THE CONTROL CONSOLE. THIS CONDUIT IS SHOWN UNDERGROUND, ALTERNATIVELY IT MAY BE BROUGHT TO THE CONTROL PANEL OVERHEAD DEPENDING ON CUSTOMER PREFERENCE. PROVIDE A LOCKOUT/TAGOUT ELECTRICAL DISCONNECT BOX WITHIN SIGHT AND AS CLOSE TO THE CONTROL CONSOLE AS IS PRACTICAL. THIS ELECTRICAL SUPPLY CONDUIT AND DISCONNECT BOX MUST BE INSTALLED ACCORDING TO LOCAL ELECTRICAL CODE REQUIREMENTS.

NOTE 21
PROVIDE ONE, 1 INCH SCH 40 RIGID STEEL CONDUIT AS A COMPRESSED AIR SUPPLY. THIS CONDUIT IS SHOWN UNDERGROUND, ALTERNATIVELY IT MAY BE BROUGHT TO THE CONTROL PANEL OVERHEAD DEPENDING ON CUSTOMER PREFERENCE. IF BROUGHT OVERHEAD, PROVIDE FLEX CONDUIT CONNECTING THE TERMINAL END OF THE CONDUIT TO THE CONTROL CONSOLE.

NOTE 22
THE LIFT UNIT REQUIRES CLEAN DRY COMPRESSED AIR AT THE PRESSURE AND VOLUME SHOWN ON THE LIFT UNIT DATA TABLE. A FILTER/LUBRICATOR/REGULATOR IS SUPPLIED WITH THE LIFT UNIT FOR THE LOCKING SYSTEM ONLY. A FILTER/LUBRICATOR/REGULATOR, AIR DRYER AND SHUTOFF VALVE MUST BE PROVIDED FOR THE LIFT UNIT TO OPERATE THE OPTIONAL ACCESSORIES. THE REQUIRED VOLUME OF AIR SHOWN IN THE LIFT UNIT DATA TABLE RECOGNIZES THAT NOT MORE THAN ONE AUXILIARY AIR CONSUMER WILL BE USED SIMULTANEOUSLY.

NOTE 23
ALL FLOOR RQUIREMENTS ARE BASED ON A CONCRETE SLAB THAT IS <u>ON GRADE</u> (SUPPORTED BY SOIL). ANY OTHER TYPE OF INSTALLATION INVOLVING A SLAB NOT ON GRADE (I.E.-SLAB SUPPORTED BY PYLONS, SECOND STORY SLAB, ETC.) MUST BE REVIEWED & ANALYZED FOR SUITABILITY BY THE BUILDING ARCHITECT, AT THE EXPENSE OF OTHERS.

SURFACE LIFTS ONLY

D-SIZE

NOTICE OF CONFIDENTIAL INFORMATION

INFORMATION CONTAINED HEREIN IS CONFIDENTIAL AND PROPERTY OF MOHAWK RESOURCES LTD., WHERE DRAWING IS FURNISHED TO OTHERS IT SHALL BE USED SOLELY FOR PURPOSES OF INSPECTION, INSTALLATION, OR MAINTENANCE. THE INFORMATION SHALL NOT BE USED OR DISCLOSED BY THE RECIPIENT FOR ANY OTHER PURPOSES WHATSOEVER.

NOTES:
1. REMOVE ALL SHARP CORNERS & EDGES.
2. UNLESS OTHERWISE SPECIFIED, SURFACE FINISH TO BE 125 RMS.
3. WELDING MEDIUM SHALL CONFORM TO AWS SPECIFICATIONS TO E-70XX ELECTRODES OR E-70T1 CODE 5.3 FLUX CORE WIRE ONLY.

TOLERANCES:
ANGULAR ± 1.°
FRACTIONAL ± .030
DECIMAL:
0.XX ± .030
0.XXX ± .005

FILE NAME P-010-D-007

P-010-A-001

NEXT ASSEMBLY

SCALE	DRAWN dak	MOHAWK RESOURCES LTD.	
CHECKED	APPROVED	TITLE SURFACE INSTALLATION GENERAL NOTES	
DATE 4/03	WEIGHT LB.	FROM	DRAWING NUMBER P-010-D-007