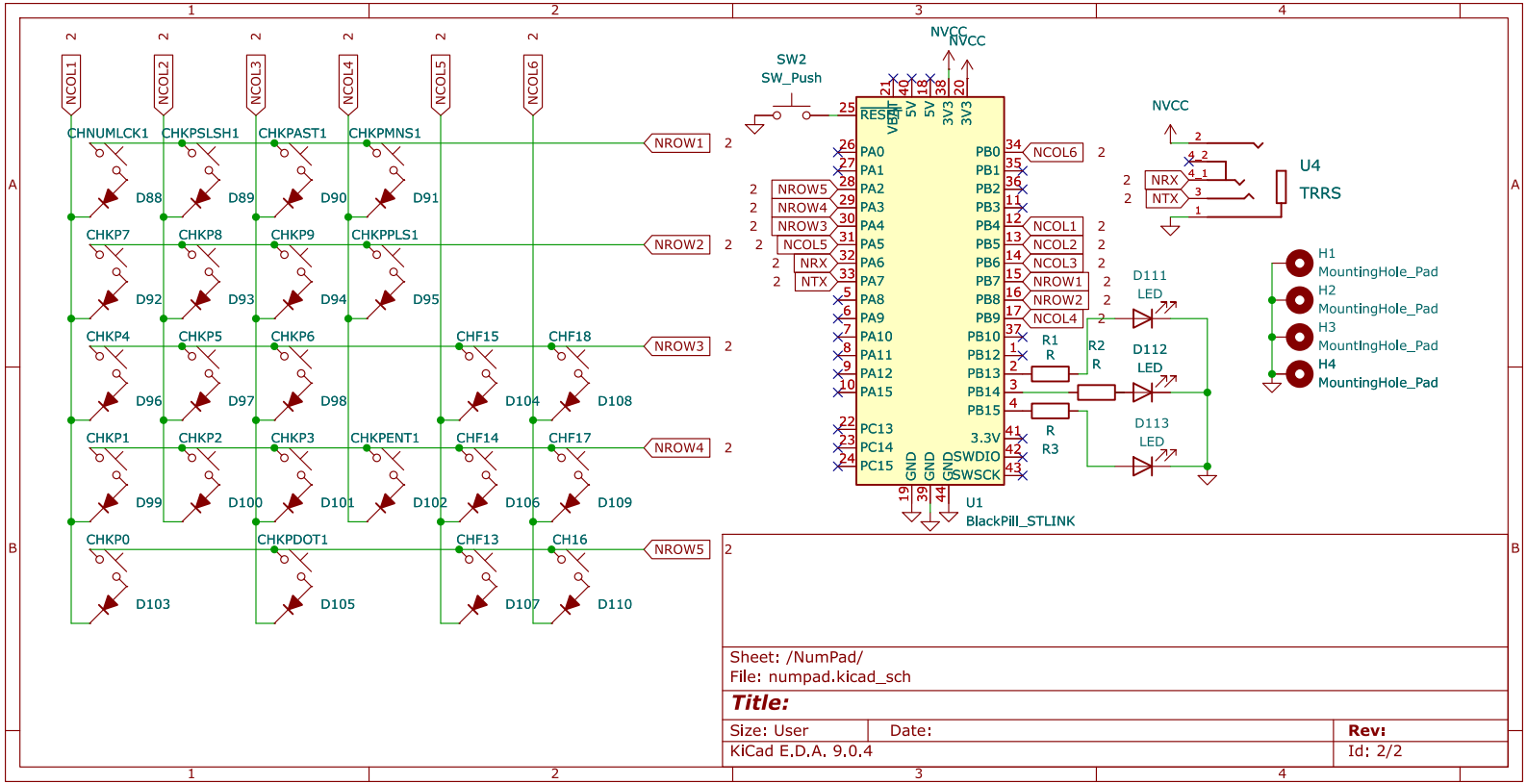

Sheet: /NumPad/
File: numpad.kicad_sch

Title:

Size: User	Date:	Rev:
KiCad E.D.A. 9.0.4		Id: 2/2