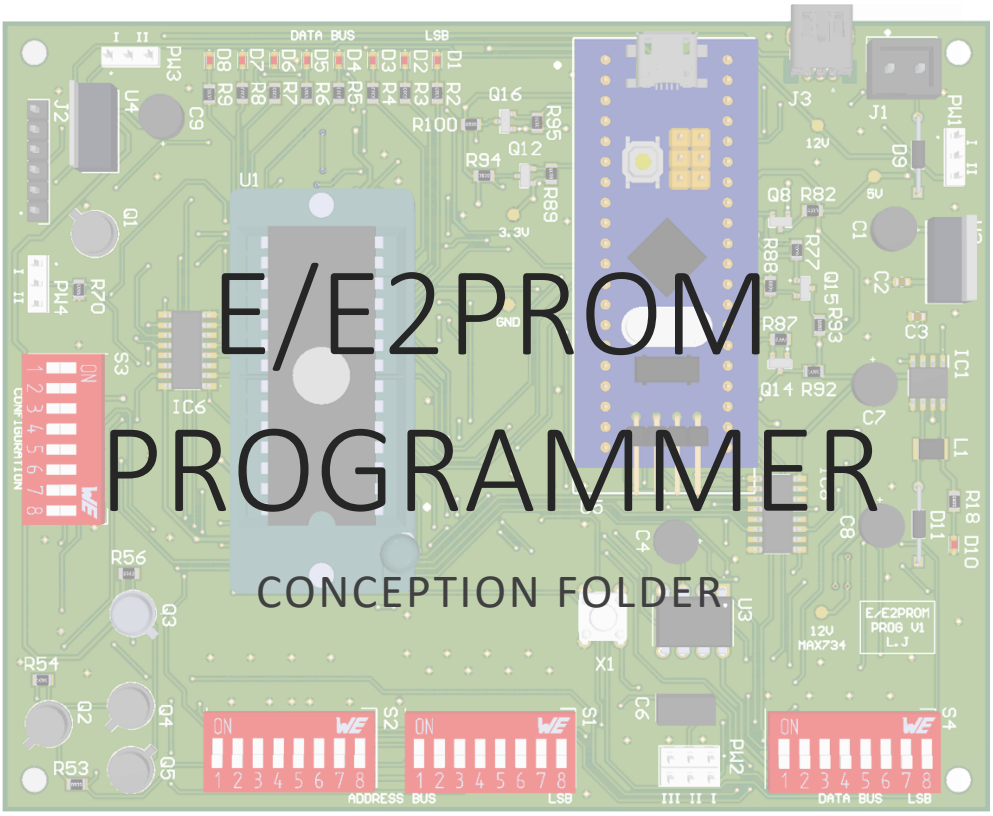

E/E2PROM PROGRAMMER

CONCEPTION FOLDER

Table des matières

Introduction 3
I. EPROM mode details 4
Pinout 4
Reading mode 5
Writing/programming mode 5
II. Board power supply 6
III. EPROM 5v/6v power supply 7
IV. 3 States EPROM \O\E (0, 5, 12v) 9
V. EPROM \C\E TTL Low-level pulse 11
VI. Manual and MCU command selection 14
VII. Shift registers 15
Parallel inputs - serial output (for reading) 15
Serial input - parallel outputs (for writing) 16
VIII. Identify E/E2PROM 17
IX. STM32 Microcontroller 20
USB Communication 20
BSS138 Voltage translation 20
Debug 22
X. Communication protocol with GUI 23
GUI request frame 23
STM32 answer frame 24
XI. Amelioration points 25
XII. Quick starter guide 26
XIII. Annexe 27
Annexe 1 : Demonstration of LM317 output voltage equation 27
Annexe 2 : Demonstration of the capacitor charge equation 27

Introduction

The E/E2PROM PROG board is used to read and program UV-EPROM (Erasable Programmable Read-Only Memory) and (Electrical Erasable) EEPROM non volatile memories with a maximum of 64kB.

The memory bytes can be read or written either manually via DIP switches (manual mode) or through a Java-based GUI application running on a laptop. The application communicates with the STM32F103 microcontroller on the board via USB, which operates as a Virtual COM Port (VCP). Mode selection is done using jumpers on the board.

The EPROM component must be in an FDIP28 (28 pin Ceramic Frit-seal DIP) or FDIP28W package, with FDIP28W indicating the presence of a quartz window on top of the case, which allows the memory to be erased using ultraviolet (UV) light.

When delivered (and after each erasure for UV EPROM), all bits of the M27C512 are in the '1' state. Data is introduced by selectively programming '0's into the desired bit locations. Although only '0's will be programmed, both '1's and '0's can be present in the data word. The only way to change a '0' to a '1' is by die exposure to ultraviolet light (UV EPROM).

The M27C512 begins to erase when exposed to light with wavelengths below 400 nm (4000 Å - angstrom). Direct sunlight can cause erasure in about one week. The recommended method is UV-C exposure at 2537 Å (253.7 nm) for faster, controlled erasure.

The integrated dose (i.e. $UV\ intensity\ \times\ exposure\ time$) for erasure should be a minimum of $15\ W.sec.cm^2$ or $J.cm^{-2}$.

<u>e.g.</u> : Erasure time of 20min using an UV lamp with $12000\mu\mathrm{W.cm}^{-2}$ power rating.

- The UV-EPROM **27C512** (512 kbits) has 16 addresses bits so $2^{16} = 65536$ addressable 8-bit memory area.

  $$2^{16} \times 8bits = 2^{16} \times 2^{-10} \times 8kbits = 2^6 \times 2^3 kbits = 512kbis = \mathbf{64kB}$$

  Thus, the memory can be represented by $4096\ (2^{16}/16)$ lines of 16 bytes. The range of addresses of the lines would be 0x0000 to 0xFFF0 ($2^{16} - 16\ bytes$) as well the last address byte is 0xFFFF.

- However the EEPROM **28C64** (64 kbits) has only a 13 addresses bits so $2^{13} = 8192$ addressable 8-bit memory area.

  $$2^{13} \times 8bits = 2^{13} \times 2^{-10} \times 8kbits = 2^3 \times 2^3 kbits = 64kbis = \mathbf{8kB}$$

  Thus, the memory can be represented by $512\ (2^{13}/16)$ lines of 16 bytes. The range of addresses of the lines would be 0x000 to 0x1F0 ($2^{13} - 16\ bytes$) as well the last address byte is 0x1FF.

I. EPROM mode details

Pinout

The 28C64 EEPROM's pinout has some differences with the 27C512 one :

A13 : NC, A14 : $\overline{PGM}$ also called write enable $\overline{WE}$ for 28C64, A15 : Ready/Busy Output 10K resistor as A15 can be an output (28C64) or an input (27C512).

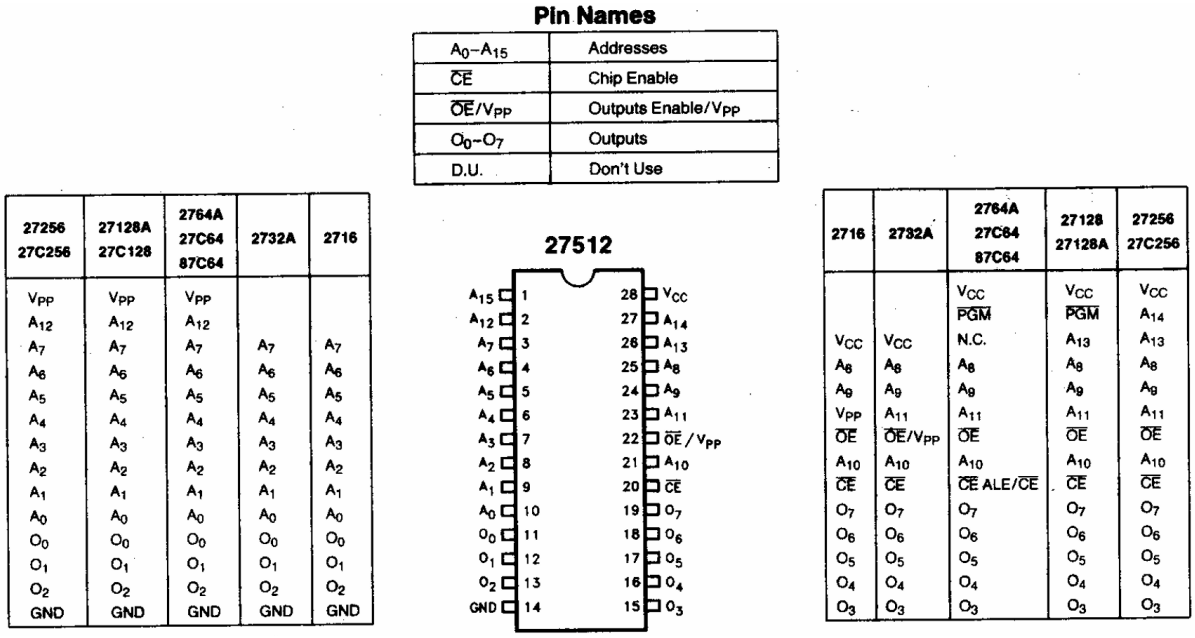

Pin Names

A_0–A_{15}	Addresses
$\overline{CE}$	Chip Enable
$\overline{OE}/V_{PP}$	Outputs Enable/V_{PP}
O_0–O_7	Outputs
D.U.	Don't Use

27256 27C256	27128A 27C128	2764A 27C64 87C64	2732A	2716
V_{PP}	V_{PP}	V_{PP}		
A_{12}	A_{12}	A_{12}		
A_7	A_7	A_7	A_7	A_7
A_6	A_6	A_6	A_6	A_6
A_5	A_5	A_5	A_5	A_5
A_4	A_4	A_4	A_4	A_4
A_3	A_3	A_3	A_3	A_3
A_2	A_2	A_2	A_2	A_2
A_1	A_1	A_1	A_1	A_1
A_0	A_0	A_0	A_0	A_0
O_0	O_0	O_0	O_0	O_0
O_1	O_1	O_1	O_1	O_1
O_2	O_2	O_2	O_2	O_2
GND	GND	GND	GND	GND

2716	2732A	2764A 27C64 87C64	27128 27128A	27256 27C256
		V_{CC}	V_{CC}	V_{CC}
		$\overline{PGM}$	$\overline{PGM}$	A_{14}
V_{CC}	V_{CC}	N.C.	A_{13}	A_{13}
A_8	A_8	A_8	A_8	A_8
A_9	A_9	A_9	A_9	A_9
V_{PP}	A_{11}	A_{11}	A_{11}	A_{11}
$\overline{OE}$	$\overline{OE}/V_{PP}$	$\overline{OE}$	$\overline{OE}$	$\overline{OE}$
A_{10}	A_{10}	A_{10}	A_{10}	A_{10}
$\overline{CE}$	$\overline{CE}$	$\overline{CE}$ ALE/$\overline{CE}$	$\overline{CE}$	$\overline{CE}$
O_7	O_7	O_7	O_7	O_7
O_6	O_6	O_6	O_6	O_6
O_5	O_5	O_5	O_5	O_5
O_4	O_4	O_4	O_4	O_4
O_3	O_3	O_3	O_3	O_3

Figure 1 : 27C512 – 27C64 pinout

The modes of operations of the 27C512 are listed in the Operating Modes table (Cf. Table 1). All inputs are TTL levels except for $\overline{OE}/V_{pp}$ and $12v$ on A9 for Electronic Signature.

Table 1 : 27C512 operating modes

Mode	V_{cc}	$\overline{CE}$	$\overline{OE}/V_{pp}$	$A9$	$Q_7 - Q_0$
Read	$5v$	V_{IL}	V_{IL}	X	Data Out
Output disable	$5v$	V_{IL}	V_{IH}	X	Hi-Z
Program	$6v$	V_{IL} pulse	V_{pp}	X	Data In
Verify	$6v$	V_{IL}	V_{IL}	X	Data Out
Program Inhibit	$6v$	V_{IL}	V_{pp}	X	Hi-Z
Standby	$5v$	V_{IH}	X	X	Hi-Z
Electronic Signature	$5v$	V_{IL}	V_{IL}	V_{ID}	Codes IDs

X = V_{IH} $(5v)$ or $V_{IL}(0v)$, $V_{pp} = 12{,}75v \pm 0{,}25v$ $(if\ M27C512)$, $V_{pp} = 12{,}5v \pm 0{,}5v$ $(if\ D27C512)$, $V_{ID} = 12v \pm 0{,}5v$

However after tests the writing mode is still working with V_{pp} under $12v$. As well we can take it after the diode in series with the $12v$ source.

Reading mode

The 27C512 has 2 control functions, both of which must be logically active in order to obtain data at the outputs. Chip Enable ($\overline{CE}$) is the power control and should be used for device selection. Output Enable ($\overline{OE}/V_{pp}$) is the output control and should be used to gate data from the output pins, independent of device selection.

Writing/programming mode

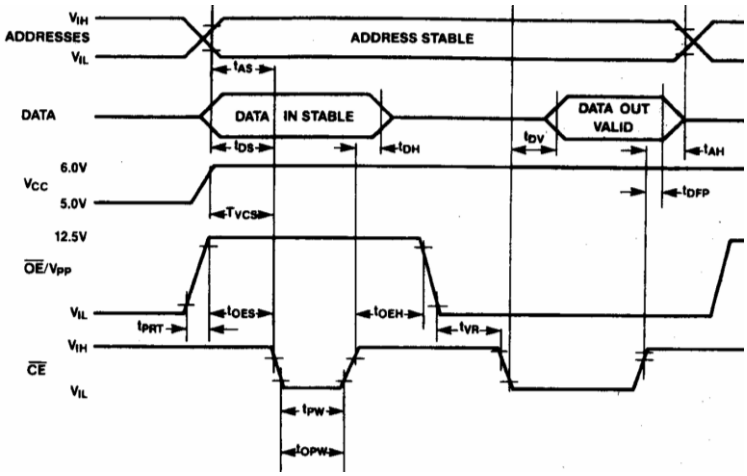

Figure 2 : EPROM (D27C512) programming waveform

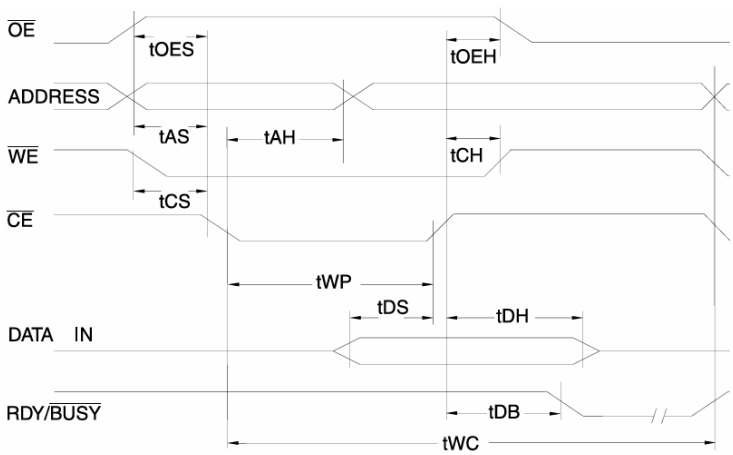

Figure 3 : EPROM (28C64) programming waveform \C\E controlled

The time characteristics are provided in the datasheets.

A verify (read) should be performed on the programmed bits to determine that they have been correctly programmed. The verify is performed with $\overline{OE}/V_{pp}$ and $\overline{CE}$ at V_{IL} and V_{cc} is at its programming voltage ($6v$).

The 28C64's pin 1 is $\mathrm{READY}/\overline{\mathrm{BUSY}}$ (not A15 as for the 27C512). It has an open drain output that can be used to detect the end of a write cycle. $\mathrm{READY}/\overline{\mathrm{BUSY}}$ is actively pulled low during the write cycle and is released at the completion of the write. The open drain connection allows for OR-tying of several devices to the same $\mathrm{READY}/\overline{\mathrm{BUSY}}$ line.

<u>Remark</u> : The $\mathrm{READY}/\overline{\mathrm{BUSY}}$ is not connected for the AT28C64X.

II. Board power supply

The board requires a $12v$ power supply. This $12v$ generates a $5v$ voltage by a linear regulation. The L7805CV is a three-terminal $5v$ positive regulators in a TO-220 package. It can provide a maximum output current of $1{,}5A$.

Power Dissipation Without Heatsink :

$T_{Jmax} = 125°C$ (junction temperature, temperature inside the silicon die of the chip)

$R_{\theta JA} = 65°C/W$ (thermal resistance from junction to ambient)

$$P_{max} = \frac{T_{Jmax} - T_{ambient}}{R_{\theta JA}} = \frac{125 - 25}{65} \approx 1{,}54W$$

Thus, without a heatsink, the L7805CV can safely dissipate $1{,}5W$.

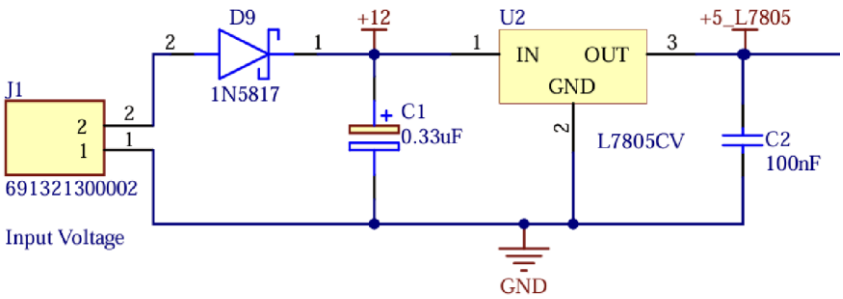

The input decoupling capacitor C_1 stabilizes the input voltage, especially if it is noisy or coming from a long wire or switch-mode supply to prevents oscillations in the regulator. It is required if the regulator is located far from the power source.

The output decoupling capacitor C_2 improves the transient response, high-frequency noise and helps smooth out voltage changes due to load variations.

A Schottky diode (metal-semiconductor junction) in series with the input is used to block reverse voltage, preventing damage. It has a lower forward voltage drop: $\sim 0.3 - 0.4\ V$ (vs. $\sim 0.7\ V$ for standard diodes in Silicon with an PN junction).

<u>Remark</u> : Even if the L7805 can accept an input until $35v$, the input voltage must be $12v \pm 0{,}5v$ in this application, as the $12v$ source is also used for the EPROM $\overline{OE}$ for programming purposes.

III. EPROM 5v/6v power supply

The EPROM requires a 5v power supply in reading mode and 6v in writing on the pin Vcc (28).

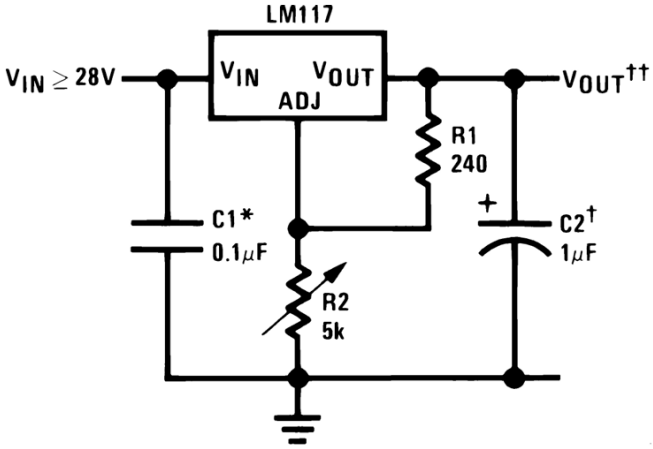

Figure 4 : LM317 basic schematic from datasheet

Computing the output voltage (Vout) of an LM317 1.2-37v adjustable regulator (from an input at least 3v over the desired output) is done using the following formula (Eq. XIII.1) :

$$Vout = 1.25 \times \left(1 + \frac{R2}{R1}\right)$$

R1 and R2 are the values of the trimmer resistors. In practice, one usually chooses a value for R1 (often 220 or 240 ohms) and calculates the value of R2 needed to obtain the desired output voltage.

The LM317's internal reference voltage is 1.25V. This voltage is always present between the ADJ pin and the OUT pin.

- $V_{out} = 6v$ with $\boldsymbol{R_1} = \mathbf{220}\Omega$:

$$R_2 = \left(\frac{V_{out}}{V_{ref}} - 1\right) \times R_1 = \frac{6 - 1{,}25}{1{,}25} \times 220 = 830\Omega \ (we\ will\ take\ \boldsymbol{R_2} = \mathbf{820}\Omega)$$

$$R_2 \times I_{ADJ} \approx 820 \times 50.10^{-6} = 4{,}1mV\ (negligible)$$

- $V_{out} = 5v$ with $R_1 = 220\Omega$:

$$R_2 = \frac{5 - 1{,}25}{1{,}25} \times 220 = 660\Omega$$

Let R_2 and R_3 be 2 resistors in parallel, we want R_3 such as $R_{eq} \approx 660\Omega$.

$$\frac{1}{R_3} = \frac{1}{R_{eq}} - \frac{1}{R_2}$$

$$R_3 = \frac{R_{eq} \times R_2}{R_2 - R_{eq}} = \frac{660 \times 820}{820 - 660} \approx 3{,}38k\Omega \ (we\ will\ take\ \boldsymbol{R_3 = 3{,}3k\Omega})$$

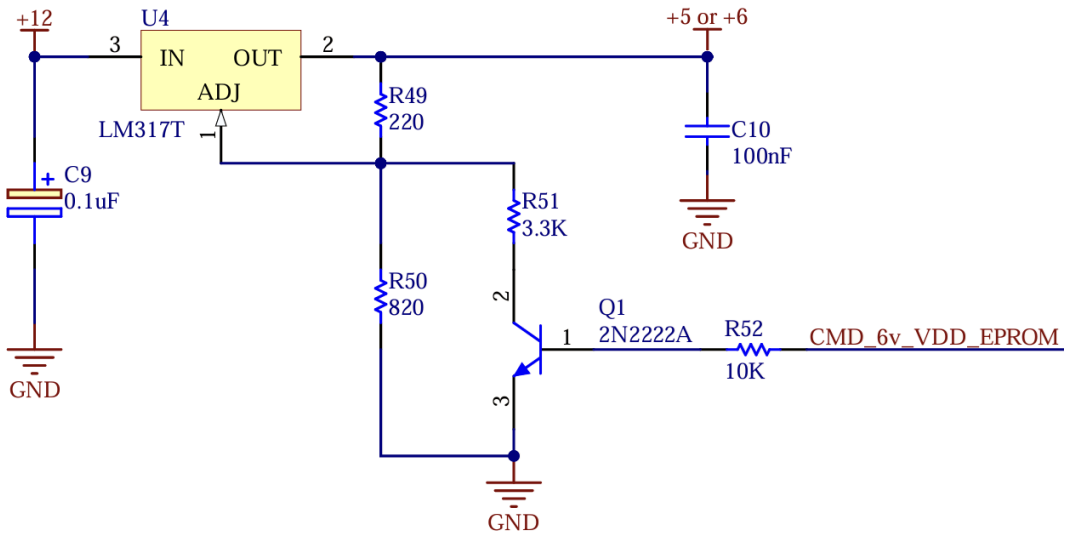

Figure 5 : 5 or 6v regulation diagram with LM317 for EPROM power supply

- NPN $Q1$ transistor **blocked** if *CMD_6v_VDD_EPROM* Low :

$$V_{out} \approx 1{,}25\left(1 + \frac{820}{220}\right) = 5{,}91v$$

- NPN $Q1$ transistor **passing (saturated)** if *CMD_6v_VDD_EPROM* High :

$$R_{eq} = \frac{820 \times 3{,}3.10^3}{820 + 3{,}3.10^3} \approx 657\Omega$$

$$V_{out} \approx 1{,}25\left(1 + \frac{657}{220}\right) = 4{,}98v$$

<u>Remark</u> : The power switching characteristics of Advanced CMOS EPROMs require careful decoupling of the devices. The supply current I_{CC} has three segments that are of interest to the system designer: the **standby** current level, the **active current level**, and **transient current peaks** that are produced by the falling and rising edges of $\overline{CE}$. The magnitude of the transient current peaks is dependent on the capacitive and inductive loading of the device at the output. The associated transient voltage peaks can be suppressed by complying with the two line output control and by properly selected decoupling capacitors. It is recommended that a $0{,}1\mu F$ ceramic capacitor be used on every device between V_{CC} and V_{SS}. This should be a high frequency capacitor of low inherent inductance and should be placed as close to the device as possible.

IV. 3 States EPROM \O\E (0, 5, 12v)

The EPROM $\overline{OE}$ pin can take 3 states :

- $0v$ if reading (OE active)
- $5v$ if (OE disabled)
- $12v$ (V_{pp}) if writing (only for UV-EPROM 27C512)

A Mux4->1 could have been used but the CMOS technology can support a maximum of $6v$ on its inputs.

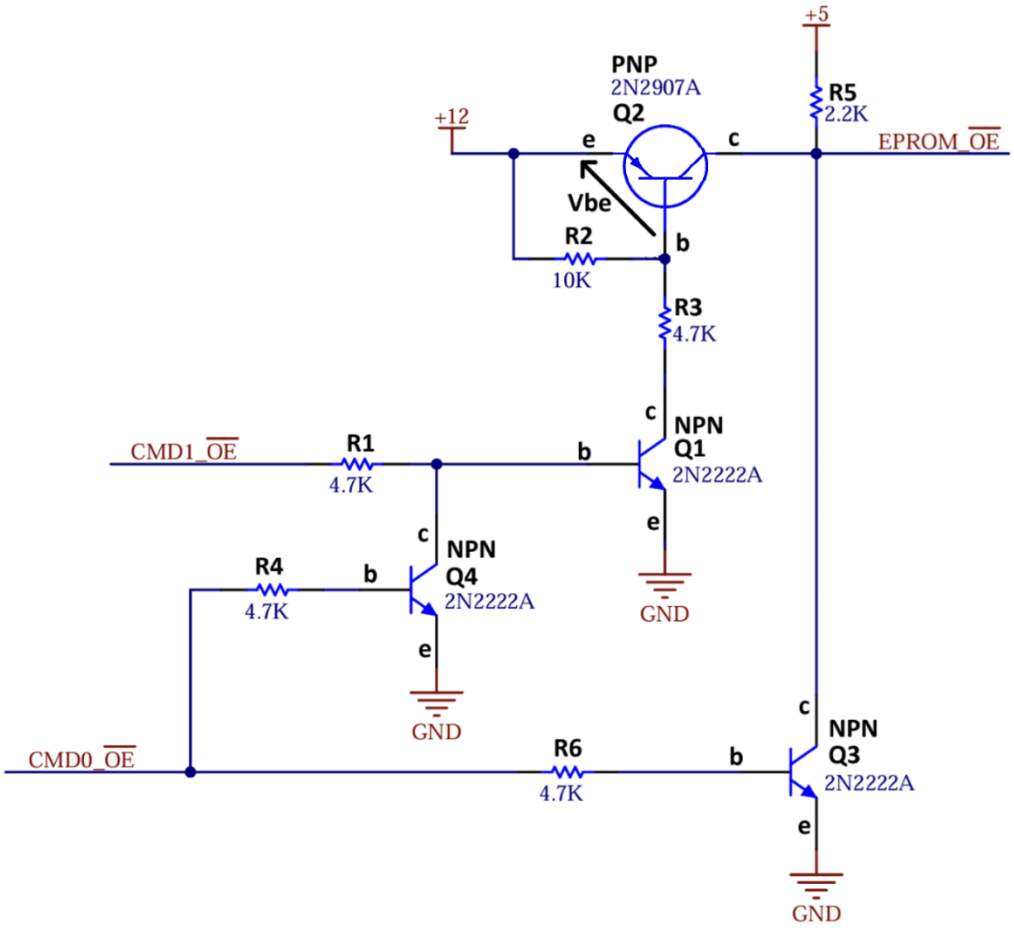

Figure 6 : Scheme command 3 state EPROM \O\E

Table 2 : EPROM_\O\E voltage depending on the 2 logic commands

CMD0 \ CMD1	$0v$	$5v$
$0v$	$5v$	$12v$
$5v$	$0v$	$0v$

- CMD0 at high :
  Q_3 is saturated so the output is put to the ground through Q_3, the output voltage will be $\varepsilon = V_{ce}(Q_3) \sim 0v$ if well saturated.

- CMD0 at low and CMD1 at low :
  CMD0 at low block the bipolar transistors Q_3 and Q_4. CMD1 low too, Q1 is blocked, the base of Q_2 becomes at the same $12v$ potential than its emitter. $V_{be}(Q_2) = 0 > -0{,}6v$ so being a PNP, Q_2 is blocked too. The output will be linked with the 5v source through R_5. Else if is no longer connected to ground

- CMD0 at low and CMD1 at high :
  This time Q_1 is saturated and the divisor bridge R_2 R_3 will make the potential of the base of Q_2 lower than the 12v source at the emitter. $V_{be}(Q_2) = V_b - V_e < -0{,}6v$ so Q_2 is saturated. The output voltage will be $12v - \varepsilon$, where $\varepsilon = V_{ce}(Q_2) \sim 0v$.

All the transistor's emitters are put to a fixe potential.

<u>Resistor choices</u> :

Q1 saturated provide the current to R3 :

$$V_{R3} = 12 - V_{be}(Q_2) - V_{ce}(Q_2) \approx 11{,}4v$$

$$V_{ce}(Q_2) \sim 0v \; and \; V_{be}(Q_2) \approx 0{,}6v(diode\ voltage)$$

$$I_{R3} = \frac{11{,}4}{4{,}7.10^3} \approx 2{,}4mA$$

We consider an H_{FE} gain of 10 for Q1 in saturated mode (V_{ce} as low as possible).

$$I_{R_1} = \frac{2{,}4.10^{-3}}{10} = 0{,}24mA$$

CMD0 and CMD1 logic $5v$ TTL :

$$V_{R1} = 5v - V_{be}(Q1) = 5 - 0{,}6 = 4{,}4v$$

$$R_1 = \frac{V_{R1}}{I_{R_3}} = \frac{4{,}4}{2{,}4.10^{-4}} \approx 18k$$

So, to saturate Q_1, we need $R_1 < 18k$. Idem for Q_3 and Q_4.

The EPROM $\overline{OE}$ input impedance being high, the current consumed will be really small and so the output voltage drop in $R5$ will be small.

V. EPROM \C\E TTL Low-level pulse

To write the data byte at a specific address, a TTL low-level pulse must be applied to the $\overline{CE}$ input with $\overline{OE}/V_{pp}$ at its programming voltage and V_{cc} at $6v$.

The t_{PW} low pulse time differs between EPROM corresponding to the $\overline{CE}$ initial program pulse width :

Table 3 : UV-EPROM and EEPROM Low pulse times

E/E2PROM	$Min\ t_{PW}$	$Typ\ t_{PW}$	$Max\ t_{PW}$	Unit
D27C512 (Intel UV-EPROM)	0,95	1,0	1,05	ms
28C64 (EEPROM)	0,1	–	1	μs
M27C512 (STMicroelectronics UV-EPROM)	95	–	105	μs

Remark : The M27C512 program pulse width is not performed in hardware on the PCB.

We want to generate the low pulse on the pressing of a push button (or switch), however it will generate bounds and it's impossible to make it exactly 1ms.

So, by pressing the push button we will connect the negative borne of a capacitor to the ground. As the capacitor is initially charged and connected to the $5v$ power supply through R3, the capacitor will charge. C1 and R3 are an RC filter with a time characteristic equal to $R \times C$.

By default the capacitor is not charged and not connected to the ground, only its positive borne is at $5v$ and directly connected to AOP's non inverting input v^+. Then, the voltage of the AOP's inverting input v^- from the divider bridge ($\sim 1{,}7v$) is lower than voltage on the non inverting input ($v^+ > v^-$). In that case the $\overline{CE}$ (connected to the AOP's output) would be V_{cc}^+ so $5v$.

Once the button is pressed, v^+ will change to $0v$ as the uncharged capacitor will no be connected to the ground. When the charge of C1 will reach the voltage of v^-, so the output will change back to $5v$.

Once the button released, the capacitor will discharged through R4 and R3.

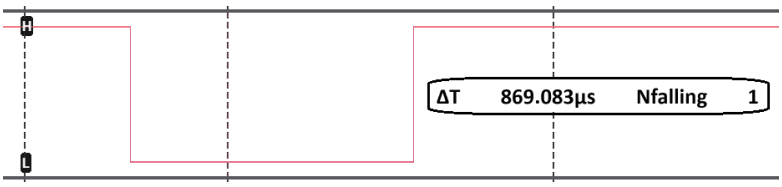

Figure 7 : Experimental low pulse time measured with a logic analyser

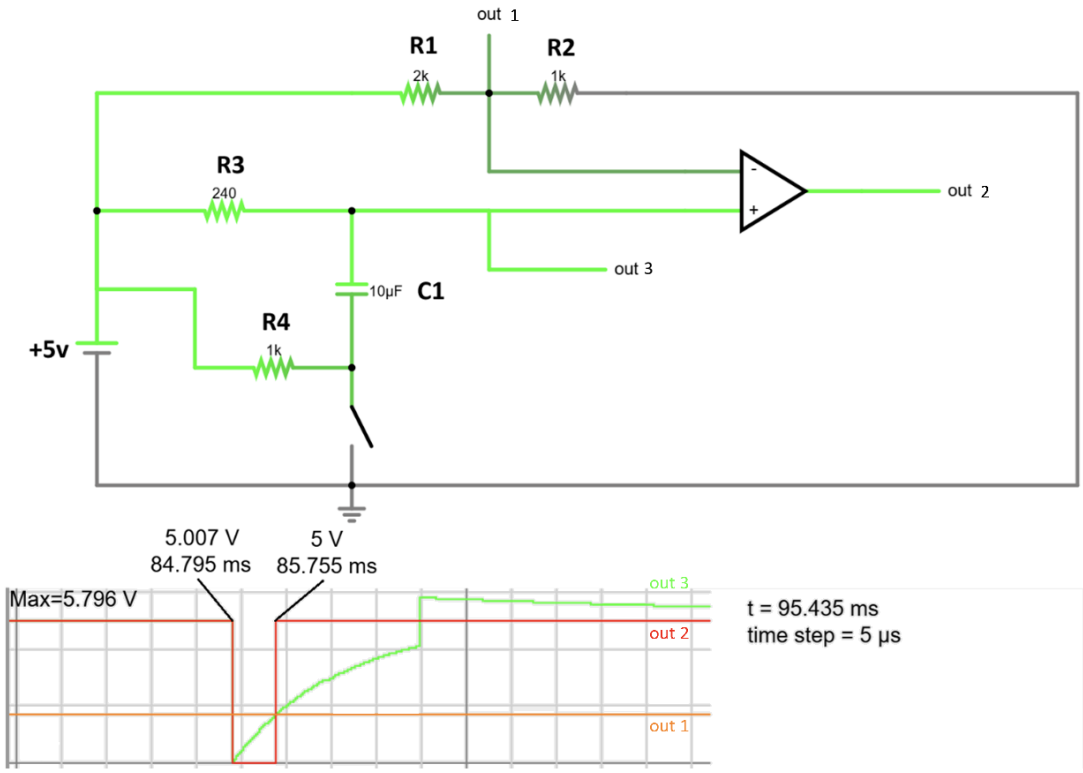

Figure 8 : Falstad low pulse simulation

$V_s = V_{cc}\left(1 - e^{-\frac{t}{\tau}}\right)$ (Eq. XIII.2)

- Finding R_3 and $C_1$for UV-EPROM 27C512 :

$$V_s = V_{cc}\left(1 - e^{-\frac{t}{\tau}}\right), we\ are\ looking\ for\ \tau\ such\ as \begin{cases} V_s = 5/3 \approx 1{,}7v\ (v^-) \\ V_{cc} = 5v \\ t = 1ms\ (t_{PW}\ 27C512) \end{cases}$$

$$1 - \frac{V_s}{V_{cc}} = e^{-\frac{t}{\tau}}$$

$$-\frac{t}{\tau} = \ln\left(1 - \frac{V_s}{V_{cc}}\right)$$

$$\tau = \frac{-t}{\ln\left(1 - \frac{V_s}{V_{cc}}\right)}$$

Analytic application :

$$\boldsymbol{\tau} = \frac{-10^{-3}}{\ln\left(1 - \frac{5/3}{5}\right)} = \frac{-10^{-3}}{\ln\left(1 - \frac{1}{3}\right)} = \frac{-10^{-3}}{\ln\left(\frac{2}{3}\right)} = \frac{-10^{-3}}{\ln(2) - \ln(3)} \approx \mathbf{2{,}47ms}$$

Furthermore the time constant $\tau = R_3 C_1$, we fixe $\boldsymbol{C_1 = 10\mu F}$:

$$R_3 = \frac{\tau}{C_1} = \frac{2{,}41.10^{-3}}{10^{-5}} = 241\ (we\ take\ \boldsymbol{R_3 = 240\Omega})$$

- Finding R_3 and $C_1$for EEPROM 28C64 :

The low pulse time for the EEPROM being really short and as it can be over a pretty big range of time values, we don't compare the RC filter voltage using an AOP as done for the UV-EPROM. The minimum EPROM threshold detection for an high voltage input is $V_{IH} = 2v$. The time taking by the discharged capacitor to become $2v$ charged need to be between 0,1 and $1\mu s$.
Its working with $C_1 = 4{,}7nF$ and $R_3 = 2k\Omega$.

<u>Remark</u> : The value of the discharge resistor R_4 will impact the peak and the discharge time after realising the push button. R_4 was chosen by testing.

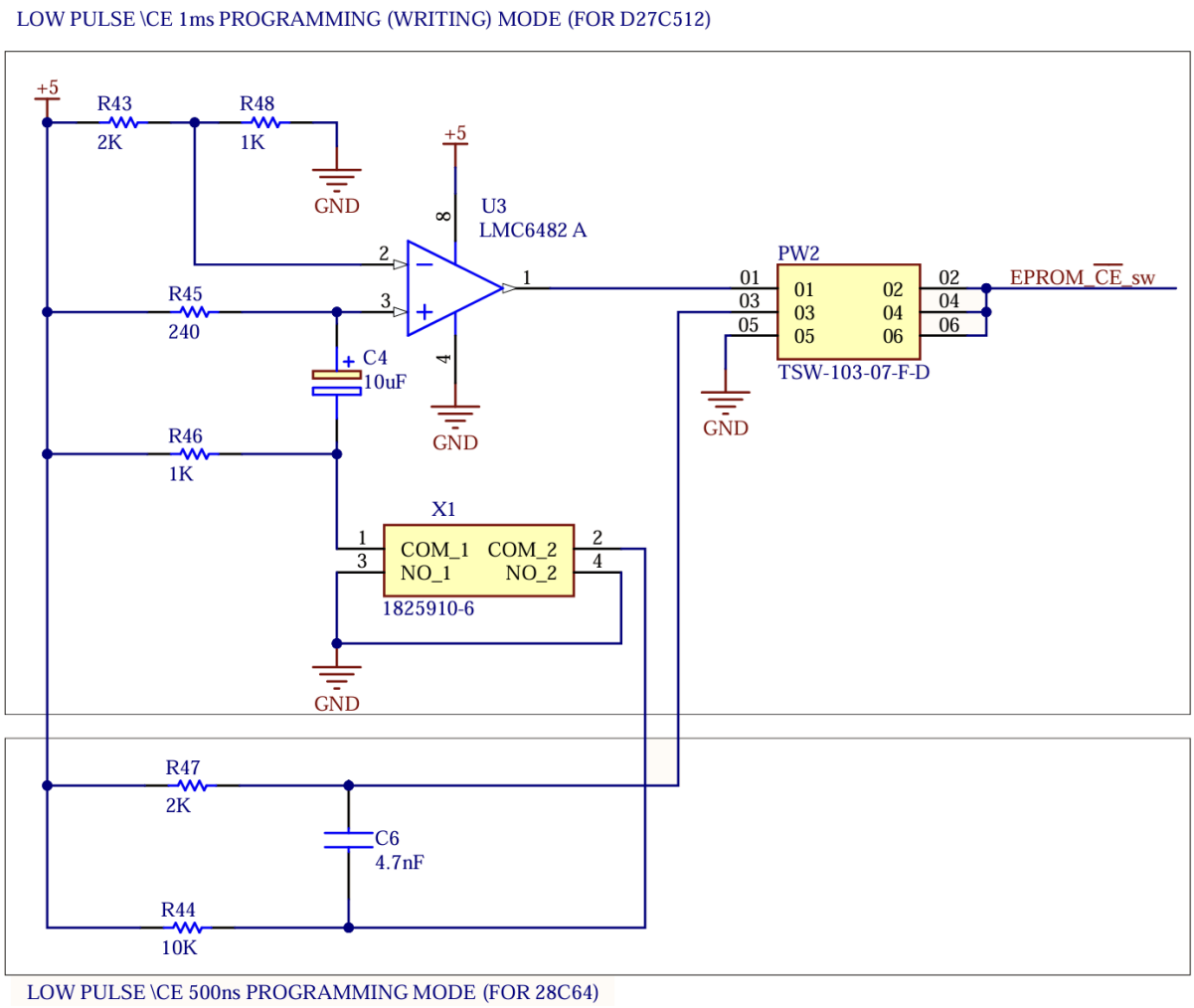

Figure 9 : Both low pulses generated by one push button

VI. Manual and MCU command selection

3 Pins allow the user to select the mode, either for a manual programming one (through dip switchs) either by the STM32.

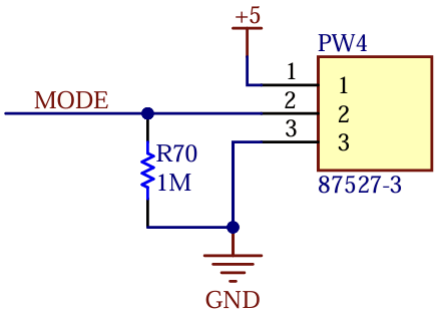

Mode	Jumper
Manual	1-2 (I)
MCU	2-3 (II)

Figure 10 : Mode selection by jumper

As an example, 74HC257 (3 output states Quad Mux 2 to 1) are use to select command signals (TTL) among one from dip switch and an other one from an STM32 pin after a level shifter to $5v$.

e.g. : If the MODE signal is set at $5v$ (manual programming) so the multiplexer command input is set to high, it's the input $I0$ that will be rewrite to the Y output.

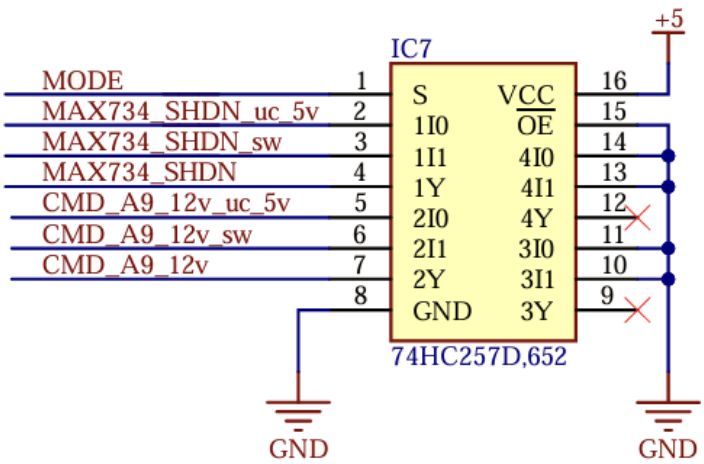

Figure 11 : 3 Output states Quad Mux2->1 for EPROM configuration (selection with MODE)

If the $\overline{OE}$ is set to high, so all the four Y outputs would be in high impedance state (Z-state). In this application, its not needed to set them to high impedance as the Mux's outputs are always enabled ($\overline{OE}$ connected to the ground), thus a 2 state one (74HC157) would have convinced.

VII. Shift registers

The 8-bit data bus can function as outputs during memory read operations, or as inputs during programming. The bit to be written can originate either from the STM32 (via the output of a PISO shift register, used to extend its output pins) or from a DIP switch for manual programming.

Both sources feed into a 3-state 2-to-1 multiplexer (74HC257). The control signal CMD0 is set high ($5v$) during memory read operations. In this case, the multiplexer's $\overline{OE}$ (Output Enable) pin is also high, placing all outputs in a high-impedance state to avoid bus contention or short circuits. Conversely, when CMD0 is low, indicating a programming operation, the multiplexer outputs are enabled, allowing the selected input source (either the shift register or the DIP switch) to drive the data bus.

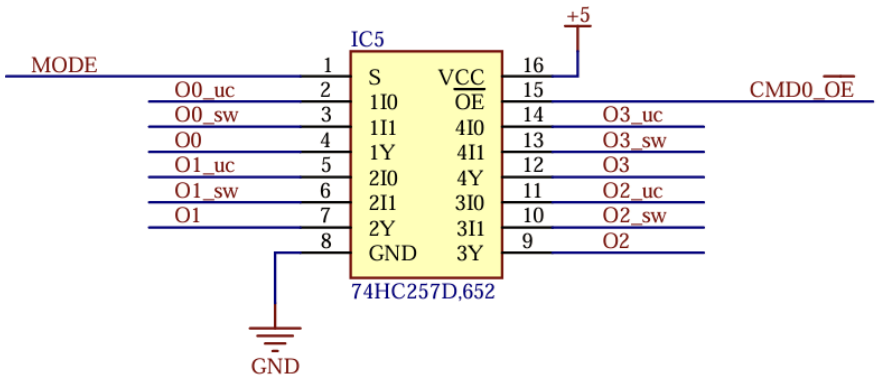

Figure 12 : Quad 3 states mux2->1 for pin data bus selections

Parallel inputs - serial output (for reading)

The 74HC165 is an 8-bit shift register with complementary outputs from the last stage.

Data can be loaded into the register either in parallel or serially. When the Shift/$\overline{\text{Load}}$ ($SH/\overline{PL}$, pin 1) input is low, the 8-bit parallel data on inputs D0–D7 is loaded asynchronously into the register. When $SH/\overline{PL}$ is high, the register enters shift mode : its contents shift right on each rising clock edge, and new data is shifted in through the serial input (SER or DS, pin 10).

In this setup, the SER pin is tied to ground, since only a single shift register is used and no additional serial input data is needed.

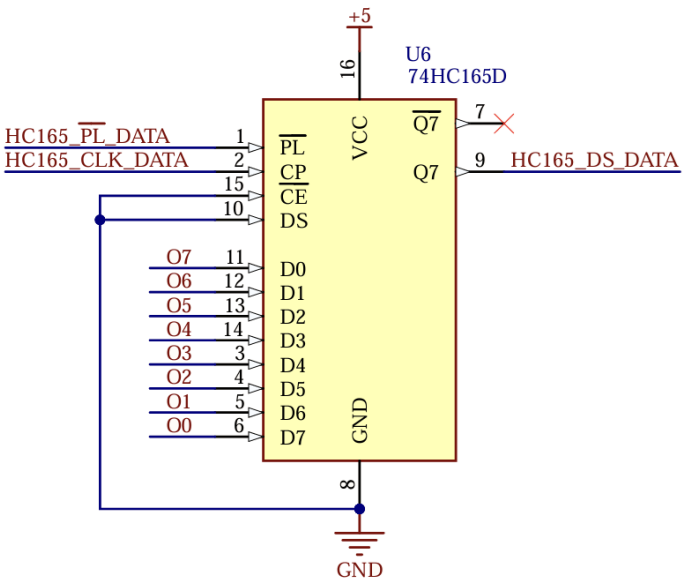

Figure 13 : 74HC165 8-bits shift register - parallel inputs / serial output

Remark : The parallel load ($\overline{PL}$) and clock signal are STM32 outputs translated to $5v$ logic by BSS138 N-channel MOSFETs. The serial output (Q7) is also translated to $3{,}3v$ logic before arriving on the STM32 input.

Serial input - parallel outputs (for writing)

A 74HC595 shift register is used to write the 8-bit data bus. Its $\overline{OE}$ pin is tied to ground, keeping its outputs always active, as they are directly connected to the previously discussed multiplexer.

Two additional 74HC595 chips are connected in series to write the 16-bit address bus (2 bytes). These shift registers have tri-state outputs, entering high-impedance (Z) state when their \OE pin is high. This occurs when the 'mode' signal is high, allowing the STM32 to release control of the address bus during manual programming via DIP switches.

To prevent conflicts or damage, $100k\Omega$ series resistors are added after each DIP switch line. These protect the lines in cases where the shift register outputs are active (not in Z-state) while the MCU is writing an address (when 'mode' is low).

Two 74HC595 shift registers can be chained by connecting the Q7S output of the first to the DS input of the second, allowing 16 bits to be shifted in serially.

Each rising edge on SHCP shifts a bit into the register. The first bit (MSB) goes to Q7 of the second register, while the last bit (LSB) ends up at Q0 of the first. A rising edge on STCP then latches the full 16-bit value to the outputs.

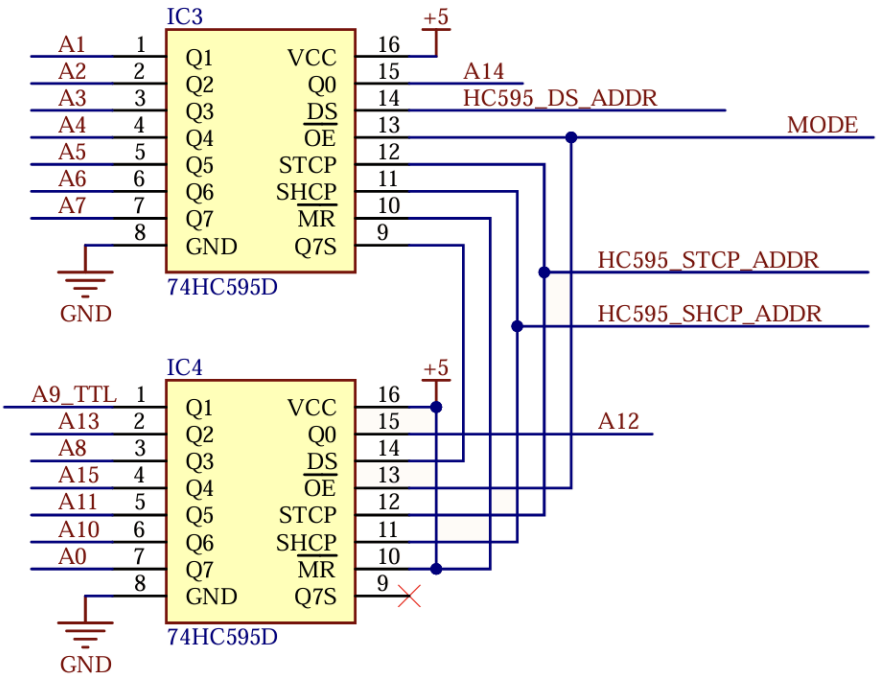

Figure 14 : 2 74HC595 8-bits shift register - serial input / parallel outputs

Remark : The bit order of the shift register's outputs has been rearranged to simplify the routing of the board

VIII. Identify E/E2PROM

To activate the intelligent identifier mode, the board must force $11{,}5v$ to $12{,}5v$ on address line A9 of the EPROM. In order to identify the chip (device and manufacturer) with the $5v$ voltage from the USB VBUS only, a MAX734 is used to boost the voltage until $12v$.

The part number M27C512 breaks down as follows: M stands for Memory, 27 indicates the EPROM family, C refers to CMOS technology (if not specified the technology is HMOS. The prefix M is used by STMicroelectronics, D by Intel and AT by Atmel, the chips are functionally and electrically equivalent, however they have different manufacturer and device's codes.

- For the UV-EPROMs (27 family), two identifier bytes may then be sequenced from the device outputs by toggling address line A0 from V_{IL} to V_{IH}. All other address lines must be held at V_{IL} during this mode except for $A14$ and $A15$ which should be held high for the D27C512 only.

Table 4 : Electronic signature for UV-EPROMs (27 family)

Pins / Identifier	A0	O7	O6	O5	O4	O3	O2	O1	O0	Hex data
Manufacturer's code										
STMicroelectronics	VIL	0	0	1	0	0	0	0	0	0x20
Intel	VIL	1	0	0	0	1	0	0	1	0x89
Device code										
D27C256	VIH	1	0	0	0	1	1	0	1	0x8D
D2764A	VIH	0	0	0	0	1	0	0	0	0x08
D27256	VIH	0	0	0	0	1	0	0	0	0x04
D27C512	VIH	0	0	0	0	1	1	0	1	0x0D
M27C512	VIH	0	0	1	1	1	1	0	1	0x3D

- For the EEPROMs (28 family) an extra 32 bytes of EEPROM memory are available to the user for device identification. By raising A9 to $12 \pm 0.5v$ and using address locations 0x1FE0H to 0x1FFFH the additional bytes may be written to or read from in the same manner as the regular memory array. Nothing is previously written by the manufacturer to identify the chip.

The MAX734 is a current-mode PWM controller used in a boost converter to step up voltages, such as converting +5v to +12v. It uses two feedback loops: an inner loop for cycle-by-cycle current limiting, and an outer loop to regulate the output voltage via an error amplifier. If more current than the maximum rated load is drawn, the output voltage drops,

and the overcurrent comparator trips around 1,5A. In normal operation, the external FET (Field-Effect Transistor) switches energy through an inductor, which is released to the output through a diode. When the $\overline{SHDN}$ pin is held low, the regulator enters shutdown mode, disabling the FET but still allowing current flow from V+ to the load through the passive inductor-diode path.

Table 5 : MAX734 pin functions

$\overline{SHDN}$	Shutdown – active low. Power switching FET is held off when $\overline{SHDN}$ is low.
VREF	Reference Voltage Output $(+1{,}23v)$ – supplies up to $100\mu A$ for external loads
SS	Soft-Start. Capacitor between SS and GND provides soft-start and short-circuit protection
CC	Compensation Capacitor Input. Externally compensates the outer feedback loop.
LX	Drain of internal N-Channel power MOSFET
Vout	Output-Voltage Sense Input. Provides regulation feedback sensing.

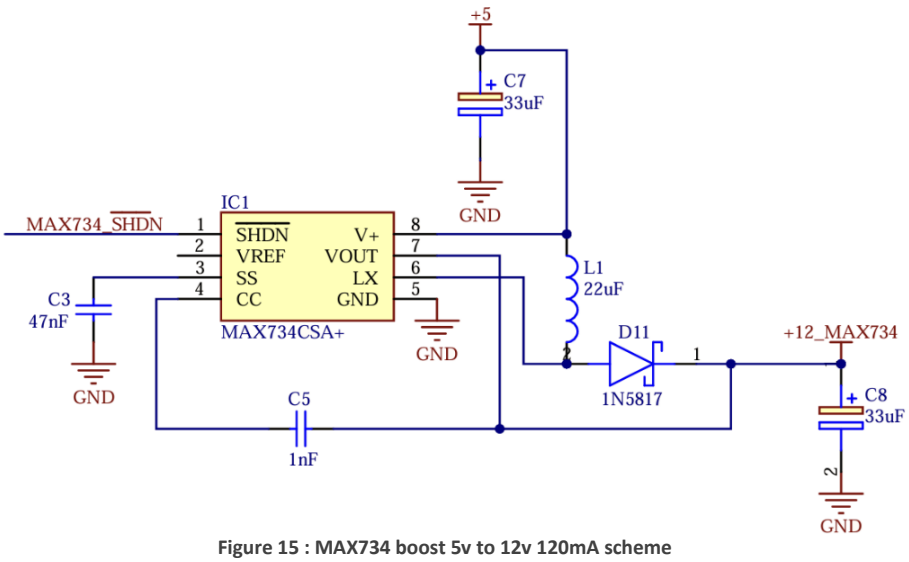

Figure 15 : MAX734 boost 5v to 12v 120mA scheme

The $12v$ $120mA$ output is sufficient only for EPROM's A9 pin (read memory's manufacturer information). Tests showed than the $12v$ generated collapses if sent to EPROM $\overline{OE}$ pin to programme the memory.

<u>Remark</u> : A MAX732 could have been usued to generate the $12v$ and to handle currents untli 250mA.

For normal addressing the A9 address pin can be at $0v$ or $5v$ (TLL levels), however for device identification it needs to be put at $12v$ (generated by the MAX734).

An analog switch (DG419) is used to select and send to the A9 pin the voltage among the 12v and the A9_TTL from the dip switch or STM32 that can be either 0v or 5v.

The DG419 acts like a digital-controlled analog signal switch that operates with supplies from ±5v to ±15v. It connects one of two inputs (S1 or S2) to a common line (D) based on a control

pin, and works for both analog and digital signals. The VL pin of the DG419 stands for logic level positive supply input.

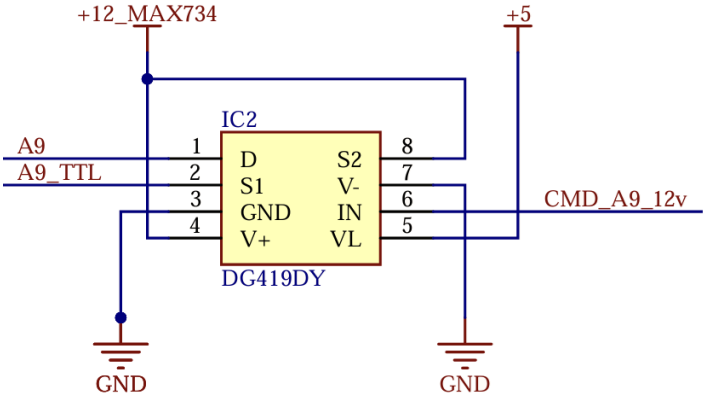

IN input	S1	S2
Logic 0 (IN = 0v)	ON	OFF
Logic 1 (IN = VL)	OFF	ON

Figure 16 : Analog switch selection for A9 pin 0-5-12v

If MAX734's $\overline{SHDN}$ pin is at $0v$ so output voltage is at 5v (the DG419 can still commute on $5v$ or $0v$ form A9 (not $12v$)).

IX. STM32 Microcontroller

USB Communication

A connector USB mini is used to exchange data between the STM32F103C8T6A present on the blue pill board and the Graphical User Interface (GUI), app launched on a laptop. The 2 pins of data DM and DP are respectively connected with the STM32 blue pill's pins PA11 and PA12. Those two pins are also those used by the USB micro soldered on the blue pill board (thus both connectors can be used).

DM (D–) and DP (D+) are the differential data lines used for communication in USB connections. They carry signals as a differential pair to reduce noise and improve data integrity.

Remark : For proper signal timing and to avoid data errors, DM and DP should have the same wire length. Unequal lengths can cause signal skew, leading to degraded performance or communication failure. Matching their lengths ensures reliable high-speed data transmission.

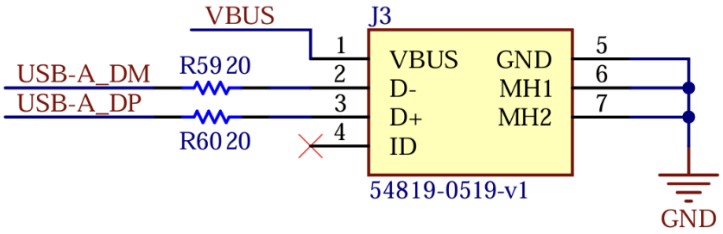

Figure 17 : USB mini connector

The identification pin ID is let Not Connected (NC) for the laptop to know that the board is a peripheric. The VBUS is a $5v$ supply provided by the laptop. It is delivered through the connected USB port.

The communication uses the USB CDC protocol (Communication Device Class). The STM32 acts as a Virtual COM Port (VCP), which is a Windows interface for accessing serial communication over USB. We configure the STM32's hardware USB peripheral to operate as a CDC device, allowing it to connect to a VCP on the PC. This setup enables data exchange over USB at full-speed (12 Mbps).

BSS138 Voltage translation

IC (integrated circuit) based on HC technology (High-speed CMOS) such as the 74HC165 and 74HC595 shift registers on the board have an high-level input voltage V_{IH} minimum threshold of 3,15v for $V_{cc} = 4.5v$ and 4,2v for $V_{cc} = 6v$.

However as the STM32 logic is 3,3v, voltage translators are required to adapt the voltage levels.

The BSS138 is a low-voltage N-channel MOSFET commonly used for bidirectional voltage level translation. The voltage translation is realised by using one BSS138 and two pull-up resistors per signal line.

The BSS138 turns on fully with a low gate-source voltage $V_{GS_{TH}} \approx 1{,}3v$. The transistor is passing if $V_{GS} > V_{GS_{TH}}$.

$R_{DS_{ON}} = 1\Omega$ (Static Drain Source On resistance) for $V_{GS} = 4{,}5v$ and $I_D = 0{,}22A$

<u>Remark</u> : The CMOS can works with a $V_{cc} = 2v$ and in that case the minimum threshold for V_{IH} would be $1{,}5v$ what would be compatible with the STM32 logic levels. However, the EPROM $5v$ logic impose to have a regulation.

Four situations are possible as the source can come from the $3{,}3v$ as from the $5v$ and the source can be at high or low state.

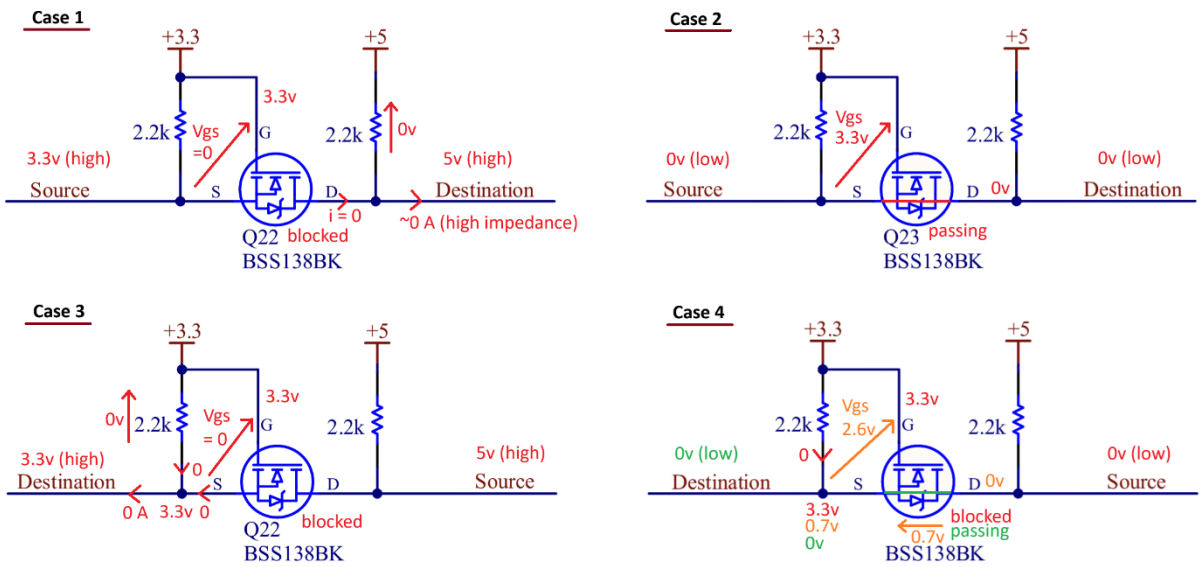

Figure 18 : Bidirectional voltage translation explanation

- <u>Case 1</u> : 3.3v source – high state

The gate source voltage of the N-channel MOSFET is zero ($V_{GS} = V_G - V_S = 0v$).

$V_{GS} = 0v < V_{GS_{TH}} = 1{,}3v$, the transistor is blocked. The component connected to $5v$ source has an high impedance so a small current. As there is no current going in the $5v$ pull-up resistance, the tension across its terminals is zero and the $5v$ goes to the destination signal.

- <u>Case 2</u> : 3.3v source – low state

$V_{GS} = 3.3v > V_{GS_{TH}} = 1{,}3v$, the transistor is saturated so passing. The $0v$ at the source is copied to the drain.

- <u>Case 3</u> : 5v source – high state

The $3{,}3v$ signal is now an input so the $3{,}3v$ source will be linked to the signal as almost no current is crossing the resistor.

- <u>Case 4</u> : 5v source – low state

Initially there is no current in the 3,3v pull-up resistance so the source voltage is 3,3v.

$V_{GS} = 0v < V_{GS_{TH}} = 1{,}3v$, the transistor blocked.

However, as the voltage across the internal diode is over its $0{,}7v$ junction voltage the current can pass from the source to the gate through the diode and the voltage of the source is reduced to $0{,}7v$ ($V_{Drain} + 0{,}7v$), that is a transitional state.

Thus the gate source voltage becomes $V_{GS} = 3{,}3 - 0{,}7v = 2{,}6v > V_{GS_{TH}} = 1{,}3v$, the transistor is saturated and the $0v$ of the source go to the destination signal.

For example, BSS138 MOSFETs are used to level-shift the STM32's $3{,}3v$ control signals to the $5v$ logic level required by the 74HC165 parallel-in serial-out (PISO) shift register, and to safely receive its serial output back at $3{,}3v$.

Debug

On genuine ST-Link V2 debug probe, VAPP (pin 1 and 2) is only an input. It is used to sense the target voltage. It does not supply power, but instead allows the debugger to adapt its I/O voltage levels (typically between 1.8 V and 3.3 V) to match those of the target microcontroller. The STM32 should be powered on by an other external source to process the flashing/debug.

However on many ST-Link V2 clones, the VAPP pin is connected directly to 3.3V from the USB regulator inside the dongle, and therefore acts as a power output. In that case the STM32 can be flashed with the VAPP 3.3v output.

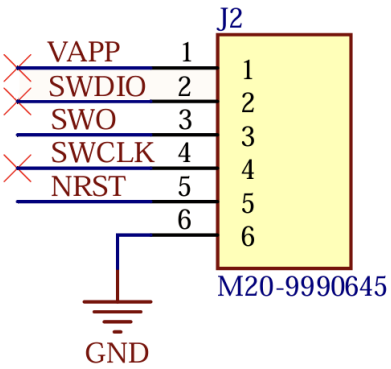

Figure 19 : SWD debug port

The current provided by the probe might not go over 100mA which might not be enough to ensure the proper functioning of the whole PCB board

The pin SWO of the probe is connected through the main board to the pin PB3 of the STM32, likewise NRST is connected on the blue pill NRST pin.

However the 3 other pins VAPP, SWDIO and SWCLK must be connected on the blue pill SWD port.

<u>Remark</u> : The blue pill can be blocked if flashed without Serial Wire enabled (SYS/Debug in SMT32CubeIDE IOC file). To solve it both boot jumpers (BOOT0 and BOOT1) must be set on '1', the reset button should then be pressed. Depower the board and put back the 2 boot jumpers on '0'. The board can now be connected with STM32CubeProgrammer through the debug probe STLink-v2 (SWD port). The full chip memory need to be erased and disconnected.

X. Communication protocol with GUI

GUI request frame

Table 6 : Communication protocol - GUI read/write request frames

	Master address	Slave address	Payload length LE	FC	Start address	Number of bytes to process	Byte contents	CSC	END
Write into EPROM	0x01	0xF4	0x00 00 09	0xD3	0x00 10	0x00 00 04	0xFF AA BB CC	0x15	0x16
Read from EPROM	0x01	0xF4	0x00 00 05	0xD4	0x00 10	0x00 00 04	-	0xE2	0x16
Read memory ID	0x01	0xF4	0x00 00 00	0xD5	-	-	-	0xCA	0x16
Send memory ID	0x01	0xF4	0x00 00 02	0xD5	-	-	0x89 0D	0x60	0x16

The **master address** correspond to the address of the sender, it is either '0x01' for the GUI (Java application) either '0xF4' for the STM32 in the board with the EPROM. Conversely, **slave address** is the receiver's address.

The 3 bytes of **payload length** (LE) corresponds at the plaintext's number of bytes (from the start address index to the last byte content index).

e.g. : $LE = 2 + 3 + Number\ of\ bytes\ to\ process = 0x(2 + 3 + 4) = 0x9$

e.g. : $Number\ of\ bytes\ to\ process = 0x00\ 1A\ FF$. Thus, $LE = 0x(2 + 3 + 1AFF) = 0x1B04$

The **function code** (FC) is equal to '0xD3' for a writing into memory request, '0xD4' for a reading one and '0xD5' for requesting the 2 EPROM identification bytes.

Then, the frame contains 2 bytes to specify the **start address**. Address at which we will start to write the byte contents (if FC = '0xD3') or read the EPROM memory content (if FC = '0xD4').

A field a 3 bytes contains the **number of bytes to process** (to write or read) depending on the function code.

The **byte contents** field is only present with the function code '0xD3' for a request or with function code '0xD4' for an answer to a reading request. The byte content MSB (most significant byte) corresponds to the byte stored (or to be stored) at the start address.

e.g. : In the writing request example (Cf. Table 6) : 0xFF will be write at address 0x10, then 0xAA at address 0x11, 0xBB at address 0x12 and 0xCC at 0x13.

The **checksum** byte (CSC) is used to detect mistakes during the data transmissions. The master that send the message compute first a checksum and write the result in the last byte of the

frame. After receiving the frame, the receiver will make the same calculation with the received data and compare it with the CSC computed before the transmission.

The checksum is computing by taking the sum of all the bytes from the master address to the last byte of the byte contents field. The CSC byte is equal to the LSB (least significant byte) of this sum.

e.g. : $CSC = (0x01 + 0xF4 + 0xD3 + 0x09 + 0x10 + 0x04 + 0xFF + 0xAA + 0xBB + 0xCC)\ \&\ 0xFF$

$$CSC = (0x515)\ \&\ 0xFF = 0x15$$

Each frame is ending by the **END byte** '0x16'.

STM32 answer frame

Ack stands from acknowledgement to confirm that the bytes were written while the send to GUI frame is an answer to a previous GUI reading memory request.

Table 7 : Communication protocol – STM32 read/write answer frames

	Master address	Slave address	Payload length LE	FC	Start address	Number of bytes to process	Byte contents	CSC	END
Writing ACK	0xF4	0x01	0x00 00 05	0xD3	0x00 10	0x00 00 04	-	0xE1	0x16
Send to GUI	0xF4	0x01	0x00 00 09	0xD4	0x00 10	0x00 00 04	0xFF AA BB CC	0x16	0x16
Send memory ID	0xF4	0x01	0x00 00 02	0xD5	-	-	0x89 0D	0x60	0x16
Memory ID ACK	0xF4	0x01	0x00 00 00	0xD5	-	-	-	0xCA	0x16
Error (NACK)	0xF4	0x01	0x00 00 00	0xA5	-	-	-	0x9A	0x16

In this example (Cf. Table 7) the payload is equal to $0x02$ as the content of the frame is only constituted of the 2 bytes of memory identification (1 byte for the manufacturer ID and 1 byte for the device code).

XI. Amelioration points

LEDs connected through a 220 Ω resistor directly to a D27C512 output cause the voltage to drop to around 2.5 V because the CMOS EPROM can only source a few milliamps and cannot drive the LED current fully. In contrast, the 28C64 outputs 5 V because it is NMOS/TTL and can source and sink more current, enough to drive LEDs with low-resistance resistors.

This difference is due to the chip technology and output drive strength. The output current can be estimated as $I = \frac{V_{out} - V_{led}}{R_{serie}} \approx \frac{5-2}{220} \approx 14mA$, which exceeds the safe current for a CMOS EPROM, causing the voltage to sag.

When using a 74HC165 shift register powered at 4.5 V, the VIH = 3.15 V is higher than the 2.5 V EPROM output, resulting in undefined logic levels for the microcontroller.

In a future design, the EPROM outputs should drive the gate of an N-channel MOSFET, with the resistor and LED connected to the drain and the source tied to ground, allowing proper current driving without voltage drop. That would however require more space on the PCB.

XII. Quick starter guide

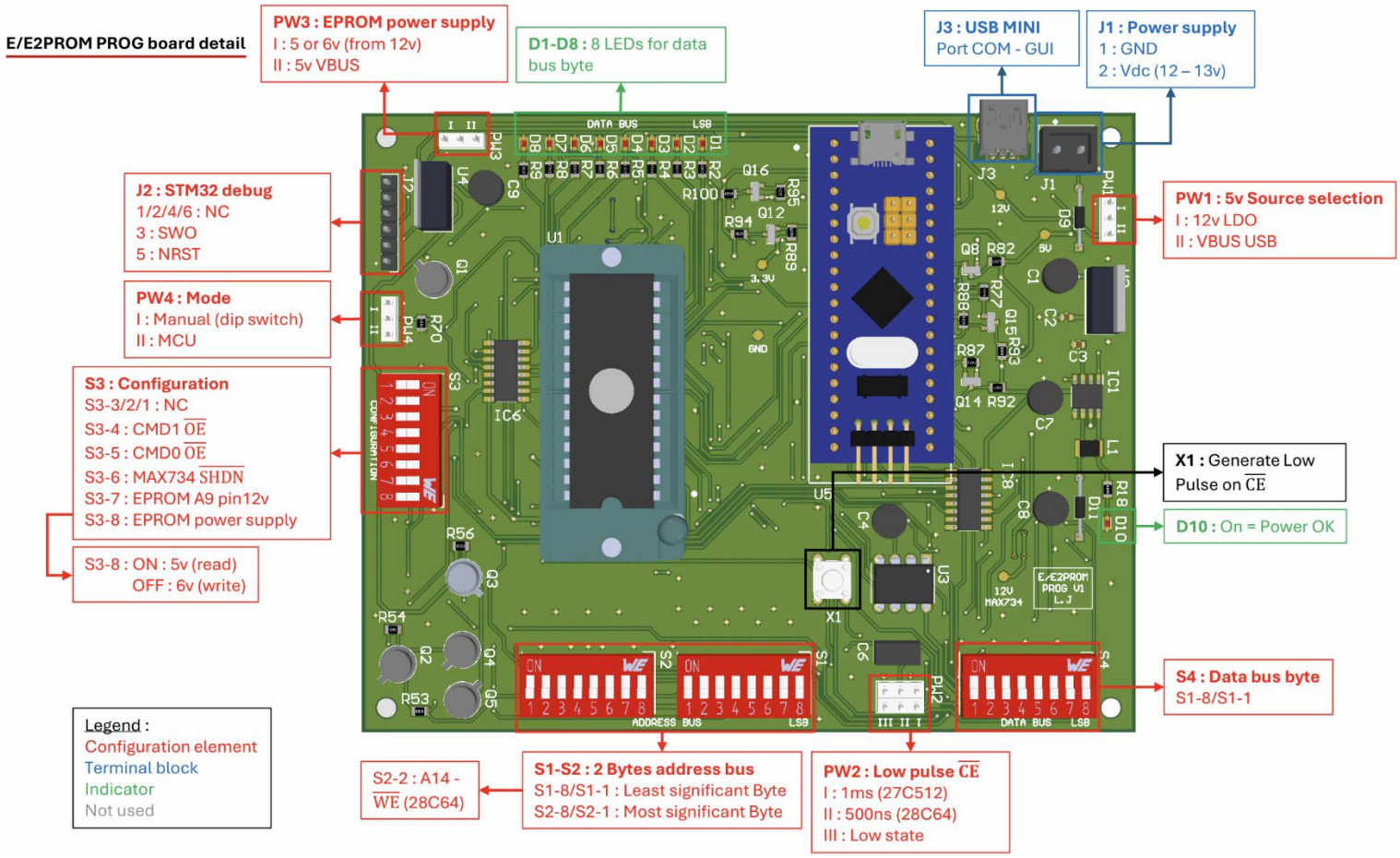

Figure 20 : Board quick starter guide

XIII. Annexe

Annexe 1 : Demonstration of LM317 output voltage equation

$$I_{R_1} = I_{R_2} = \frac{V_{out}}{R_1 + R_2}$$

$$V_{R_2} = R_2 \times i_{R_2} = V_{out}\frac{R_2}{R_1 + R_2}$$

$$V_{out} - V_{ADJ} = V_{ref}$$

$$I_{R_1} = \frac{V_{ref}}{R_1} \; and \; I_{R_2} = I_{R_1} + I_{ADJ}$$

$$V_{R_2} = R_2(I_{R_1} + I_{ADJ}) = R_2\left(\frac{V_{ref}}{R_1} + I_{ADJ}\right)$$

Thus,

$$V_{out} = V_{R_1} + V_{R_2} = V_{ref}\left(1 + \frac{R_2}{R_1}\right) + R_2 \times I_{ADJ}$$

Then, as $I_{ADJ} \approx 50\mu A$ we can neglect it

$$\boldsymbol{V_{out} = V_{ref}\left(1 + \frac{R_2}{R_1}\right)} \qquad \text{XIII.1}$$

Annexe 2 : Demonstration of the capacitor charge equation

$$i_c = C\frac{dV_c}{dt} \; and \; E = V_{cc} = V_R + V_C$$

$$E = RC\frac{dV_c}{dt} + V_c$$

$$\frac{dV_c}{dt} + \frac{1}{RC}V_c = \frac{E}{RC}$$

Second order linear equation with constant coefficients :

$$\frac{dV_c}{dt} + \frac{1}{\tau}V_c = \frac{E}{\tau}, \tau = RC$$

- Solution of homogeneous equation (transitional regime) :

$$\frac{dV_c}{dt} = -\frac{1}{\tau}V_c$$

$$\frac{dV_c}{V_c} = -\frac{1}{\tau}dt$$

$$\int \frac{dV_c}{V_c} = \int -\frac{1}{\tau}dt + k, k \in \mathbb{R}$$

$$\ln(V_c) = -\frac{t}{\tau} + k$$

$$V_{c_h} = e^{-\frac{t}{\tau}+k} = \lambda e^{-\frac{t}{\tau}}, \lambda = e^k$$

- Particular solution (steady state) :

$$\frac{dV_c}{dt} + \frac{1}{\tau}V_c = \frac{E}{\tau}, V_{c_{PS}} = E$$

- General solution :

$$V_c(t) = V_{c_h}(t) + V_{c_{PS}}(t) = \lambda e^{-\frac{t}{\tau}} + E$$

Initial conditions : $V_c(t = 0) = 0$ (capacitor initially discharged)

$$V_c(t = 0) = \lambda + E = 0$$
$$\lambda = -E$$

So,

$$\boldsymbol{V_c(t) = E\left(1 - e^{-\frac{t}{\tau}}\right)} \qquad \text{XIII.2}$$