27C512 UV-EPROM (512k bits) OR 28C64 EEPROM (64k bits)

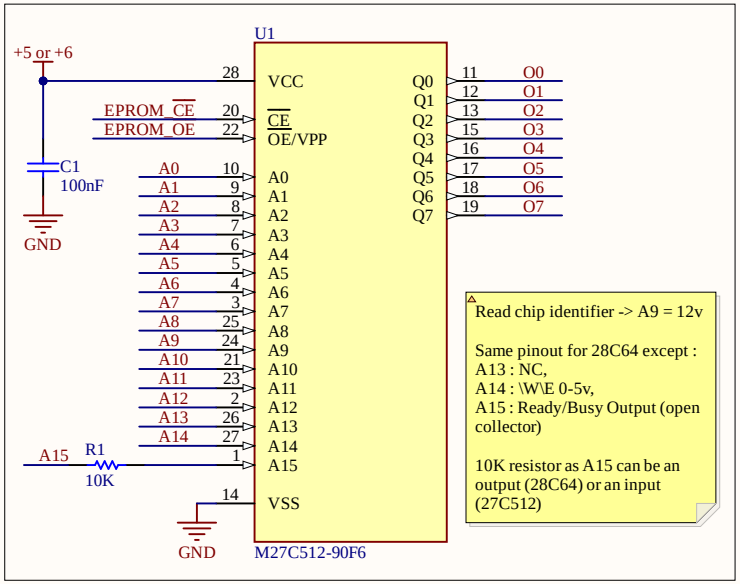

DIP SWITCHS EPROM's ADDRESS BUS

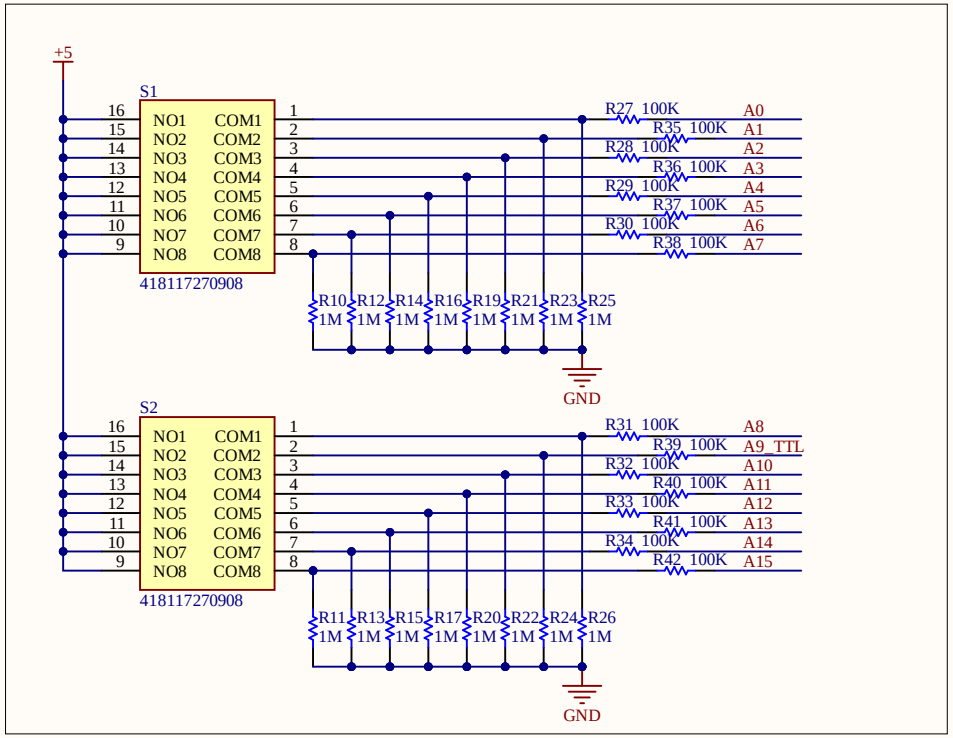

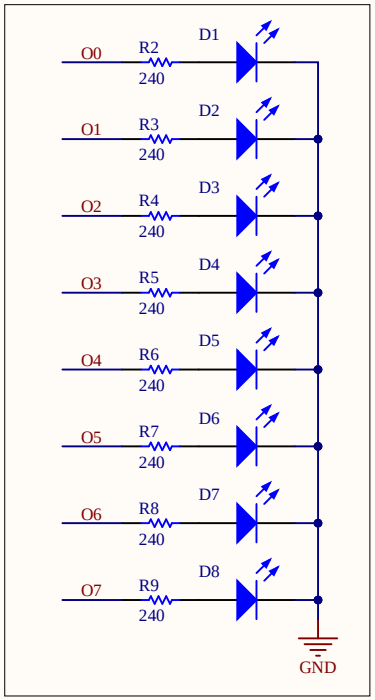

LINEAR LDO (LOW DROPOUT REGULATOR) 5V FROM 12V SOURCE

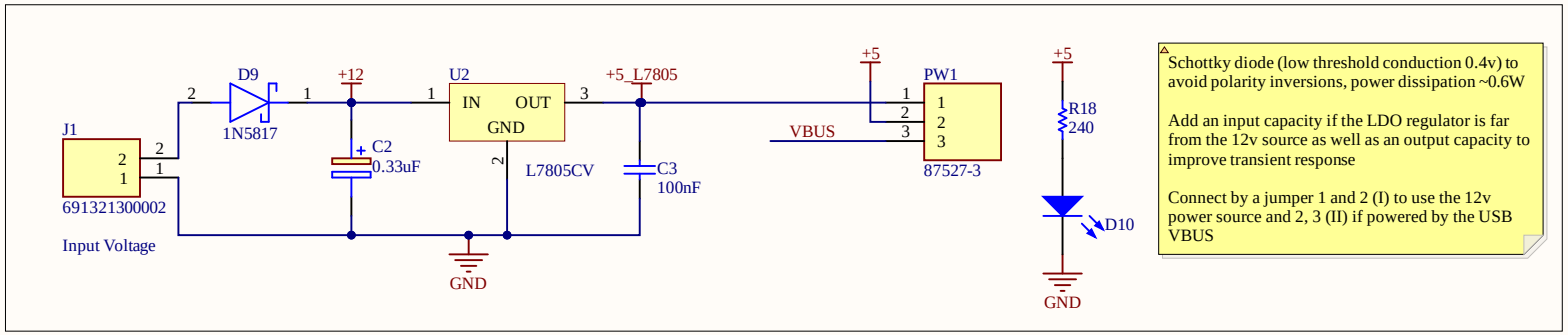

Title	EPROM PROGRAMMER P.1	
Size A4	Number v1.6	Revision v1.6
Date: 9/30/2025	Sheet of 1	
File: C:\Users\..\EPROM_Programmer.SchDoc	Drawn By: L.JAOUANNE	

LOW PULSE \CE 1ms PROGRAMMING (WRITING) MODE (FOR D27C512)

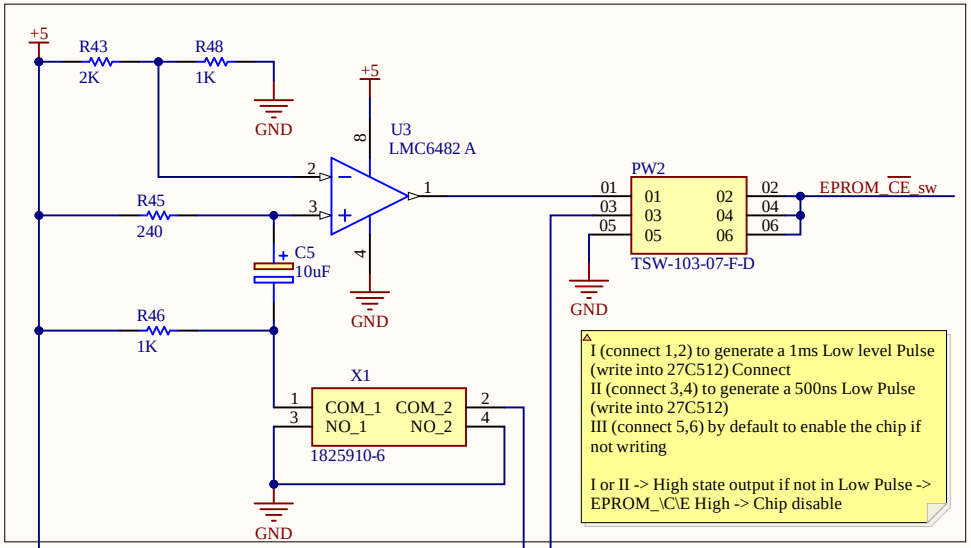

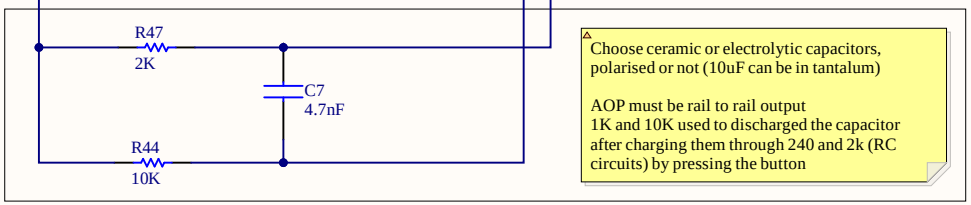

LOW PULSE \CE 500ns PROGRAMMING MODE (FOR 28C64)

+12V, 120mA PROGRAMMING SUPPLY

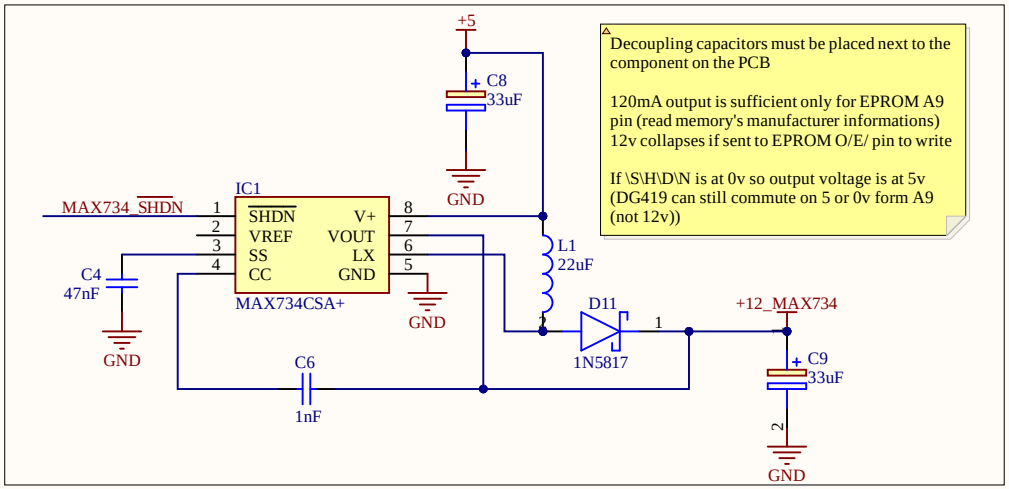

12V CONVERSION TO 5 OR 6V FOR EPROM POWER SUPPLY

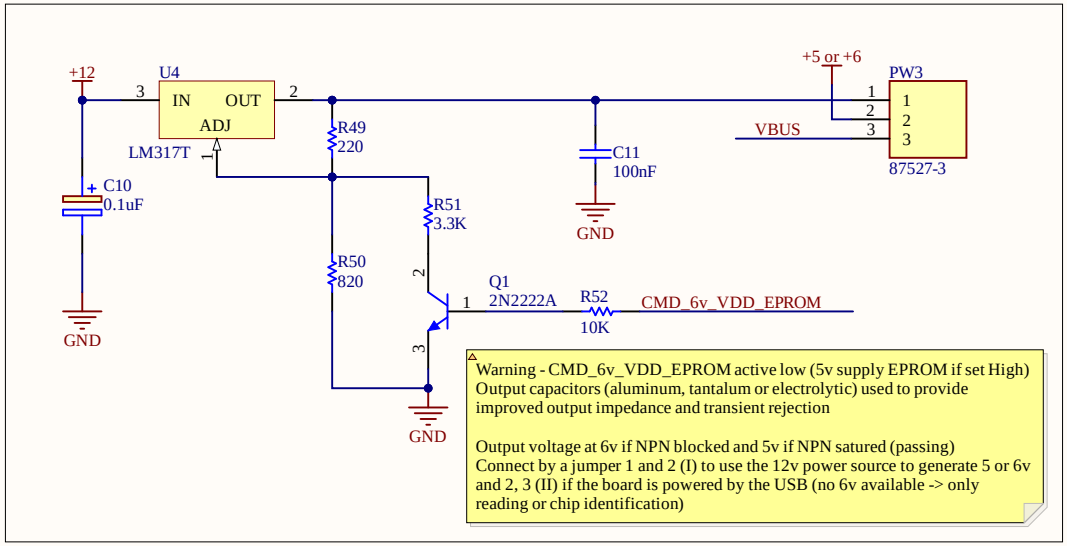

ANALOG SWITCH VOLTAGE SELECTION FOR EPROM A9 PIN

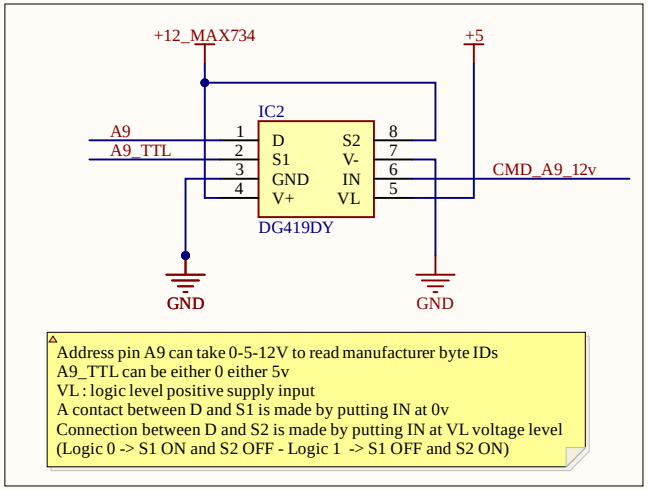

Title	EPROM PROGRAMMER P.2	
Size A4	Number v1.6	Revision v1.6
Date: 9/30/2025	Sheet of 2	
File: C:\Users\..\EPROM_Programmer_2.SchDoc	Drawn By: L.JAOUANNE	

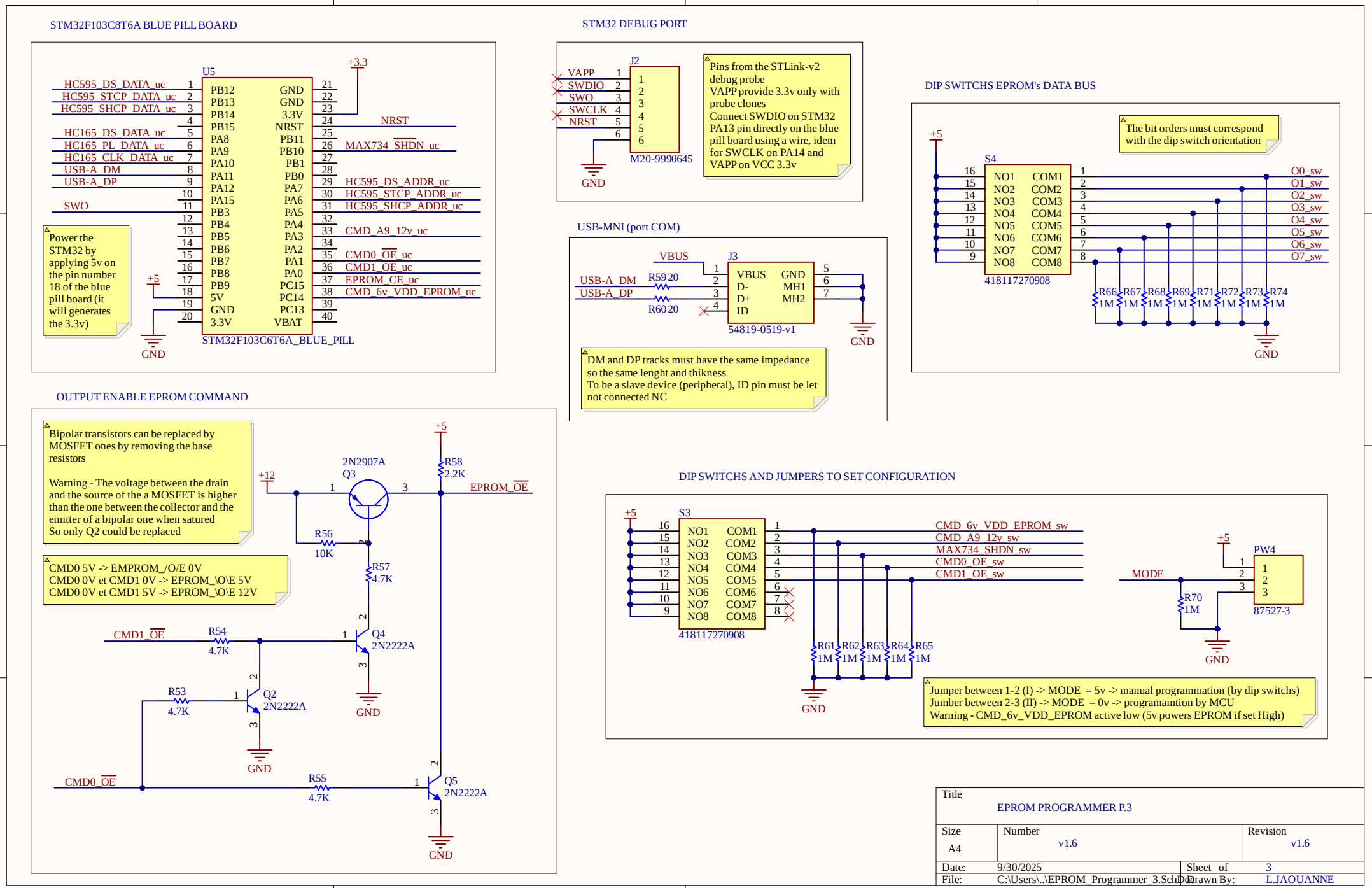
STM32F103C8T6A BLUE PILL BOARD
U5
+3.3
HC595_DS_DATA_uc
HC595_STCP_DATA_uc
HC595_SHCP_DATA_uc
HC165_DS_DATA_uc
HC165_PL_DATA_uc
HC165_CLK_DATA_uc
USB-A_DM
USB-A_DP
SWO
NRST
MAX734_SHDN_uc
HC595_DS_ADDR_uc
HC595_STCP_ADDR_uc
HC595_SHCP_ADDR_uc
CMD_A9_12v_uc
CMD0_OE_uc
CMD1_OE_uc
EPROM_CE_uc
CMD_6v_VDD_EPROM_uc
PB12 PB13 PB14 PB15 PA8 PA9 PA10 PA11 PA12 PA15 PB3 PB4 PB5 PB6 PB7 PB8 PB9 5V GND 3.3V
GND GND 3.3V NRST PB11 PB10 PB1 PB0 PA7 PA6 PA5 PA4 PA3 PA2 PA1 PA0 PC15 PC14 PC13 VBAT
STM32F103C6T6A_BLUE_PILL
Power the STM32 by applying 5v on the pin number 18 of the blue pill board (it will generates the 3.3v)
+5
GND
STM32 DEBUG PORT
J2
VAPP
SWDIO
SWO
SWCLK
NRST
M20-9990645
GND
Pins from the STLink-v2 debug probe
VAPP provide 3.3v only with probe clones
Connect SWDIO on STM32 PA13 pin directly on the blue pill board using a wire, idem for SWCLK on PA14 and VAPP on VCC 3.3v
DIP SWITCHS EPROM's DATA BUS
The bit orders must correspond with the dip switch orientation
+5
S4
NO1 NO2 NO3 NO4 NO5 NO6 NO7 NO8
COM1 COM2 COM3 COM4 COM5 COM6 COM7 COM8
418117270908
O0_sw
O1_sw
O2_sw
O3_sw
O4_sw
O5_sw
O6_sw
O7_sw
R66 R67 R68 R69 R71 R72 R73 R74
1M
GND
USB-MNI (port COM)
VBUS
J3
USB-A_DM
USB-A_DP
R59 20
R60 20
VBUS D- D+ ID
GND MH1 MH2
54819-0519-v1
GND
DM and DP tracks must have the same impedance so the same lenght and thikness
To be a slave device (peripheral), ID pin must be let not connected NC
OUTPUT ENABLE EPROM COMMAND
Bipolar transistors can be replaced by MOSFET ones by removing the base resistors
Warning - The voltage between the drain and the source of the a MOSFET is higher than the one between the collector and the emitter of a bipolar one when satured
So only Q2 could be replaced
CMD0 5V -> EMPROM_/O/E 0V
CMD0 0V et CMD1 0V -> EPROM_\O\E 5V
CMD0 0V et CMD1 5V -> EPROM_\O\E 12V
+5
+12
2N2907A
Q3
R58
2.2K
EPROM_OE
R56
10K
R57
4.7K
CMD1_OE
R54
4.7K
Q4
2N2222A
R53
4.7K
Q2
2N2222A
GND
CMD0_OE
R55
4.7K
Q5
2N2222A
GND
DIP SWITCHS AND JUMPERS TO SET CONFIGURATION
+5
S3
NO1 NO2 NO3 NO4 NO5 NO6 NO7 NO8
COM1 COM2 COM3 COM4 COM5 COM6 COM7 COM8
418117270908
CMD_6v_VDD_EPROM_sw
CMD_A9_12v_sw
MAX734_SHDN_sw
CMD0_OE_sw
CMD1_OE_sw
R61 R62 R63 R64 R65
1M
GND
MODE
PW4
87527-3
R70
1M
GND
Jumper between 1-2 (I) -> MODE = 5v -> manual programmation (by dip switchs)
Jumber between 2-3 (II) -> MODE = 0v -> programamtion by MCU
Warning - CMD_6v_VDD_EPROM active low (5v powers EPROM if set High)
Title
EPROM PROGRAMMER P.3
Size
A4
Number
v1.6
Revision
v1.6
Date: 9/30/2025
Sheet of 3
File: C:\Users\..\EPROM_Programmer_3.SchDoc
Drawn By: L.JAOUANNE

SHIFT REGISTERS (SERIAL INPUT-> PARALLEL OUTPUTS) FOR ADDRESS BUS WRITING

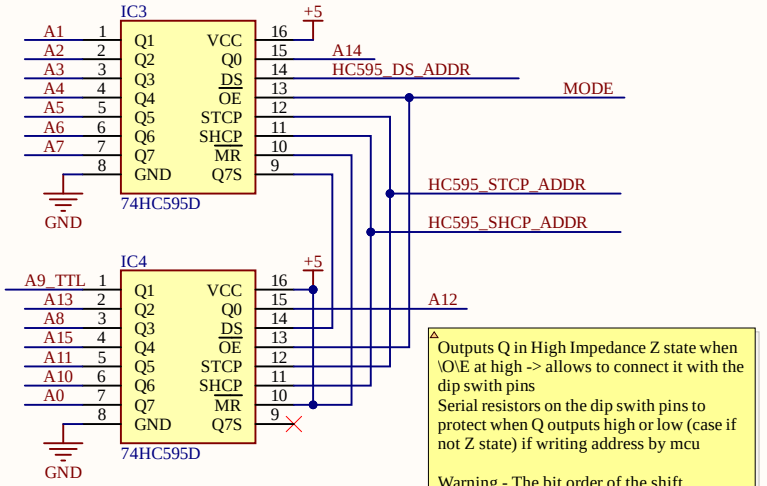

Outputs Q in High Impedance Z state when \O\E at high -> allows to connect it with the dip swith pins
Serial resistors on the dip swith pins to protect when Q outputs high or low (case if not Z state) if writing address by mcu

Warning - The bit order of the shift register's outputs has been rearranged to simplify the routing of the board

3 STATES QUAD MUX 2->1 - CONFIGURATION SETTING BY DIP SWITCHS OR MCU

74HC257 as 3 output states (Z state if \O\E High)
Here a 74HC157 (2 states) would have convinced as the output can be put to Low and not obviously to High Impedance Z state if O\E\ is at High

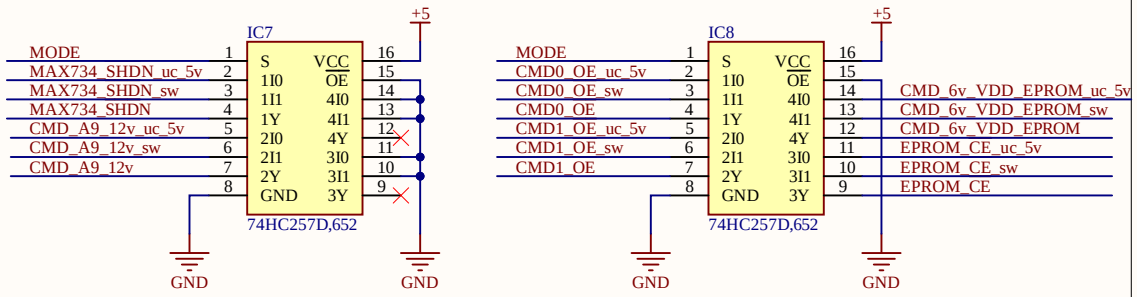

3 STATES QUAD MUX 2->1 WRITING ON DATA BUS BY DIP SWITCHS OR MCU

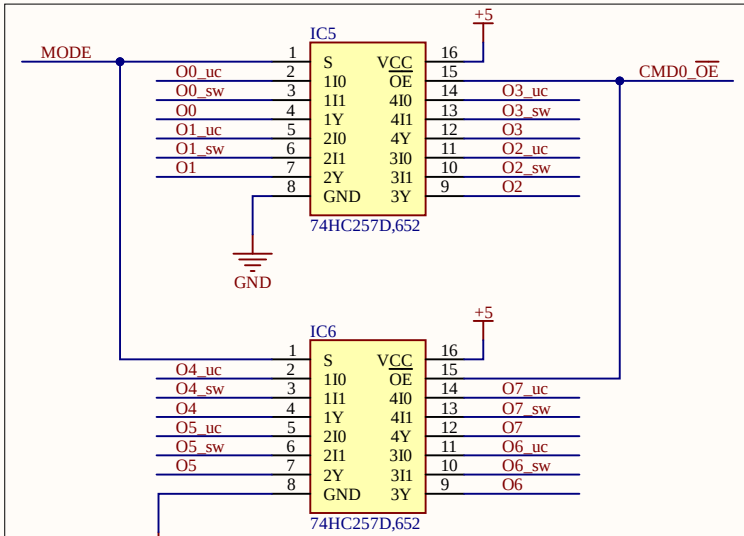

CMD0_O/E/ at Low if EPROM_\O\E\ != 0v (5 or 12v) -> writing
CMD0_\O\E/ at High if EPROM_\O\E = 0v -> reading -> all 74HC257 outputs are put at high impedance state

SHIFT REGISTERS (PARALLEL INPUTS -> SERIAL OUTPUT) FOR DATA BUS READING

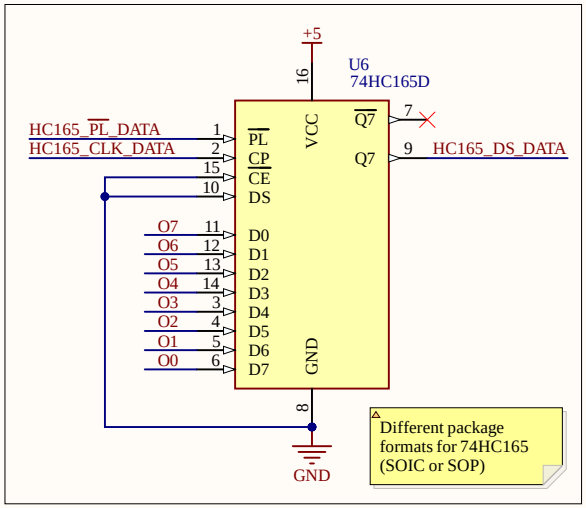

Different package formats for 74HC165 (SOIC or SOP)

SHIFT REGISTERS (SERIAL INPUT-> PARALLEL OUTPUTS) FOR DATA BUS WRITING

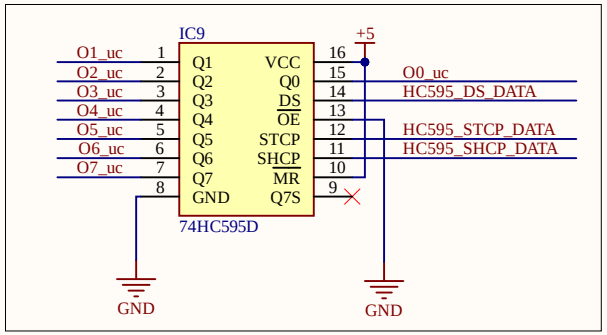

Title: EPROM PROGRAMMER P.4		
Size: A4	Number: v1.6	Revision: v1.6
Date: 9/30/2025	Sheet of 4	
File: C:\Users\..\EPROM_Programmer_4.SchDoc	Drawn By: L.JAOUANNE	

BIDIRECTIONNAL VOLTAGE TRANSLATION 3.3 <-> 5v

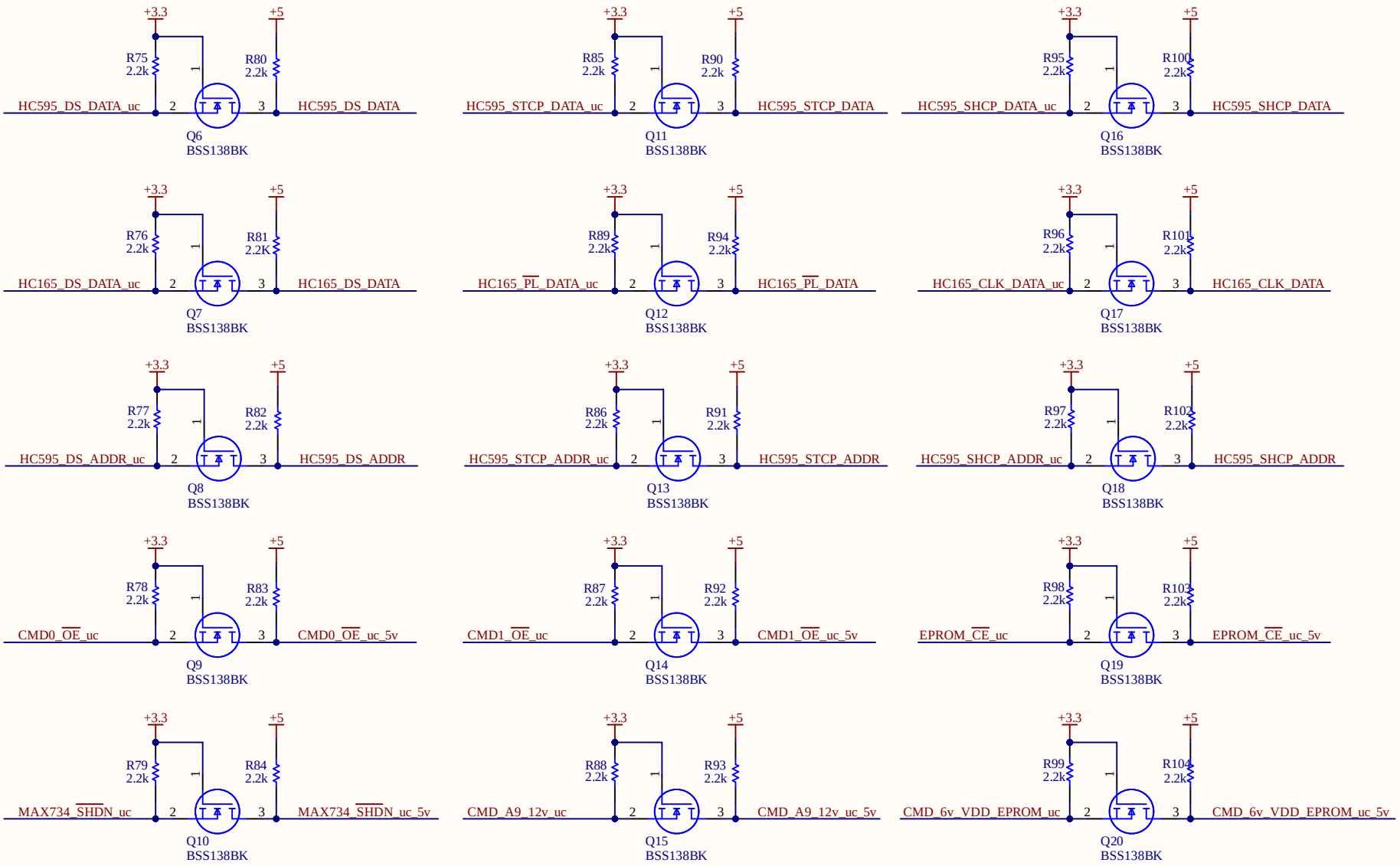

STM32 logic voltage level is 3.3v, needed of bidirectionnal volatge translattors 5 <-> 3.3 made with BSS138 N-Channel MOFET as the CMOS logic requires 5v

Title	EPROM PROGRAMMER P.5	
Size A4	Number v1.6	Revision v1.6
Date: 9/30/2025		Sheet of 5
File: C:\Users\..\EPROM_Programmer_5.SchDoc		Drawn By: L.JAOUANNE

Comment	Description	Designator	Footprint	LibRef	Quantity
100nF	Capacitor	C1, C3, C11	C0603	Cap	3
0.33uF	Capacitor Polarised	C2	CAPRD200W50D500H600	ECE-A1EKS100	1
47nF	Capacitor	C4	C0603	Cap	1
10uF	Capacitor Polarised	C5	CAPRD200W50D500H600	ECE-A1EKS100	1
1nF	Capacitor	C6	C0603	Cap	1
4.7nF	Capacitor	C7	MKS2C033301C00MI00	MKS2C033301C00MI00	1
33uF	Capacitor Polarised	C8, C9	CAPRD200W50D500H600	ECE-A1EKS100	2
0.1uF	Capacitor Polarised	C10	CAPRD200W50D500H600	ECE-A1EKS100	1
LED_SMD	LED RED CLEAR0603 SMD	D1, D2, D3, D4, D5, D6, D7, D8, D10	0603_LED	LED_SMD	9
1N5817	Schottky Diode	D9, D11	DIOAD950W60L350D150	SD103A-TR	2
MAX734CSA+	Integrated Circuit	IC1	SOIC127P600X175-8N	MAX734CSA+	1
DG419DY	Integrated Circuit	IC2	SOIC127P600X175-8N	DG419DY	1
74HC595D	Integrated Circuit	IC3, IC4, IC9	SOIC127P600X175-16N	74HC595D	3
74HC257D,652	Integrated Circuit	IC5, IC6, IC7, IC8	74HC257D652	74HC257D,652	4
691321300002	Connector	J1	SHDR2W80P0X381_1X2_871X700X940P	691321300002	1
M20-9990645	Connector	J2	HDRV6W66P0X254_1X6_1524X254X874P	M20-9990645	1
54819-0519-v1	USB - mini B USB 2.0 OTG Receptacle Connector 5 Position Through Hole, Right Angle	J3	MOLEX_54819-0519-v1	54819-0519-v1	1
22uF	Inductor RF Molded Wirewound 22uH 10% 100KHz 27Q-Factor Ferrite 0.14A2.65Ohm DCR1210 Automotive T/R	L1	INDC3225X210N	B82422A1223K100	1
87527-3	Conn Unshrouded Header HDR 3 POS 2.54mm Solder ST Thru-Hole Carton	PW1, PW3, PW4	TE_87527-3	87527-3	3
TSW-103-07-F-D		PW2	SAMTEC_TSW-103-07-F-D	TSW-103-07-F-D	1
2N2222A	High Speed Switch, 0.6 A IC, -65 to 175 degC, 3 Pin TO-18, RoHS, Bulk	Q1, Q2, Q4, Q5	STM-TO-18-3	CMP-2000-05381-1	4
2N2907A	Transistor BJT PNP	Q3	CENTRAL_TO18	2N2907A	1
BSS138BK	MOSFET (N-Channel)	Q6, Q7, Q8, Q9, Q10, Q11, Q12, Q13, Q14, Q15, Q16, Q17, Q18, Q19, Q20	TL431CDBZR215	BSS138BK	15
Res1	Resistor	R1, R2, R3, R4, R5, R6, R7, R8, R9, R10, R11, R12, R13, R14, R15, R16, R17, R18, R19, R20, R21, R22, R23, R24, R25, R26, R27, R28, R29, R30, R31, R32, R33, R34, R35, R36, R37, R38, R39, R40, R41, R42, R43, R44, R45, R46, R47, R48, R49, R50, R51, R52, R53, R54, R55, R56, R57, R58, R59, R60, R61, R62, R63, R64, R65, R66, R67, R68, R69, R70, R71, R72, R73, R74, R75, R76, R77, R78, R79, R80, R81, R82, R83, R84, R85, R86, R87, R88, R89, R90, R91, R92, R93, R94, R95, R96, R97, R98, R99, R100, R101, R102, R103, R104	R0805	Res1	104
418117270908	Switch	S1, S2, S3, S4	DIPS762W60P254L2132H695Q16N	418117270908	4
M27C512-90F6	EPROM - UV Memory IC 512Kb (64Kx8) Parallel 90 ns 28-CDIP Frit Seal with Window	U1	DIP254P1524X572-28	M27C512-90F6	1
L7805CV	Positive Voltage Regulator, 5V, 3-Pin TO-220	U2	TO220	CMP-0244-00483-1	1
LMC6482IN	Operational Amplifiers - Op Amps CMOS Dual Rail-to-Rail Input and Output Operational Amplifier 8-PDIP -40 to 85	U3	DIP254P762X508-8	LMC6482IN	1
LM317T	1.5A, 1.2V to 37V Adjustable Voltage Regulator, 3-Pin TO-220	U4	TO-220	CMP-0244-00444-1	1
STM32F103C6T6A_BLUE_PILL		U5	TE_1-5535541-8	STM32F103_BLUE_PILL	1
74HC165D	Ð ÐµÐ°Ð¸ÑÑ‚Ñ€ Ð°Ð¸Ð° shift 1 Ð-ÐºÐµÐ´Ð½Ð¼Ñ, 8 Ð°Ð¸Ñ 16-SOIC	U6	SOIC127P600X175-16N	74HC165D	1
1825910-6	Body Features: Product Orientation Vertical	X1	18259106	1825910-6	1