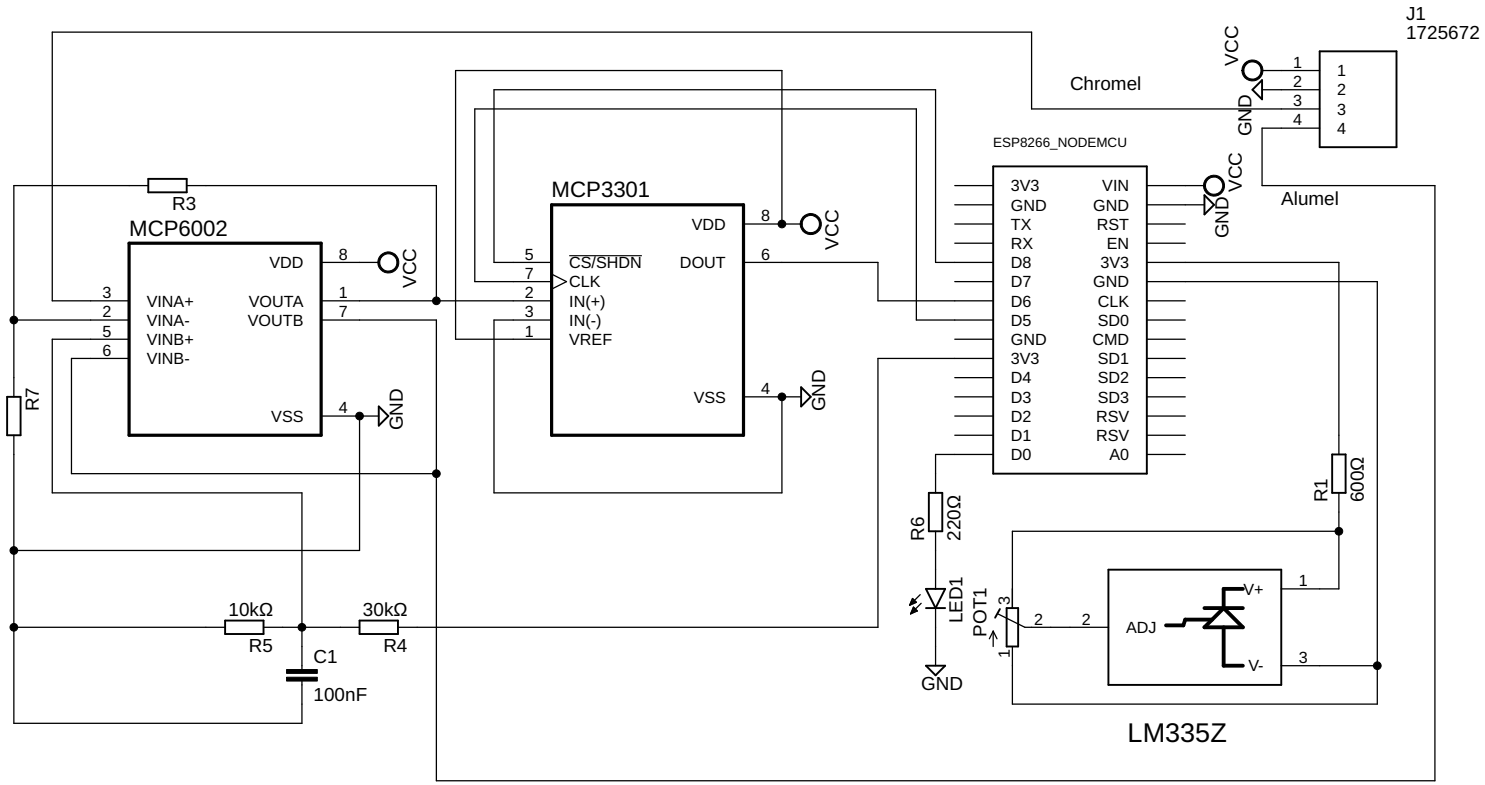

Thermocouple_pcb	
25/03/2023 23:55	
Sheet: 1/1	