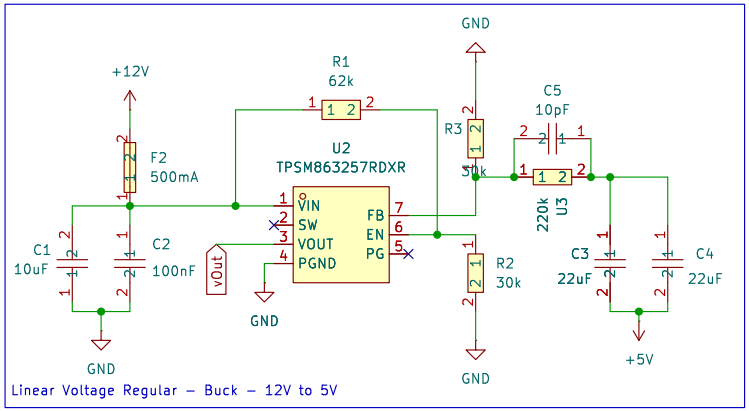

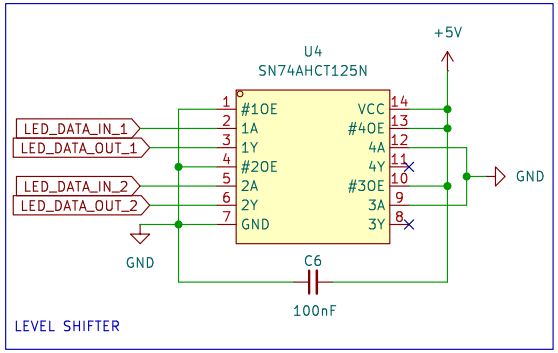

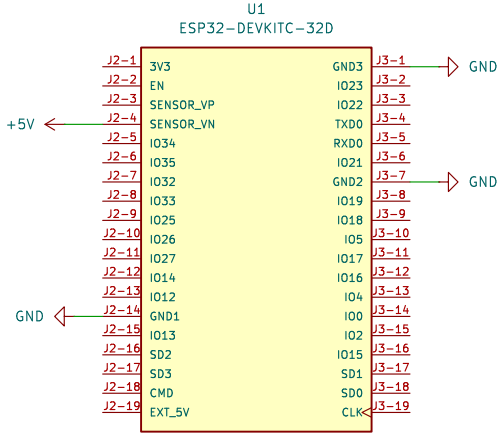

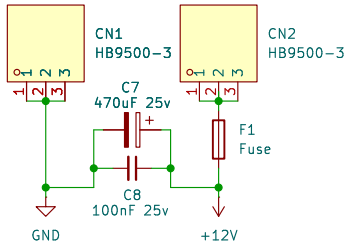

Ryan Di Lorenzo

Sheet: /

File: LimeLED.kicad_sch

Title:

Size: A4	Date:	Rev:
KiCad E.D.A. 8.0.4		Id: 1/1