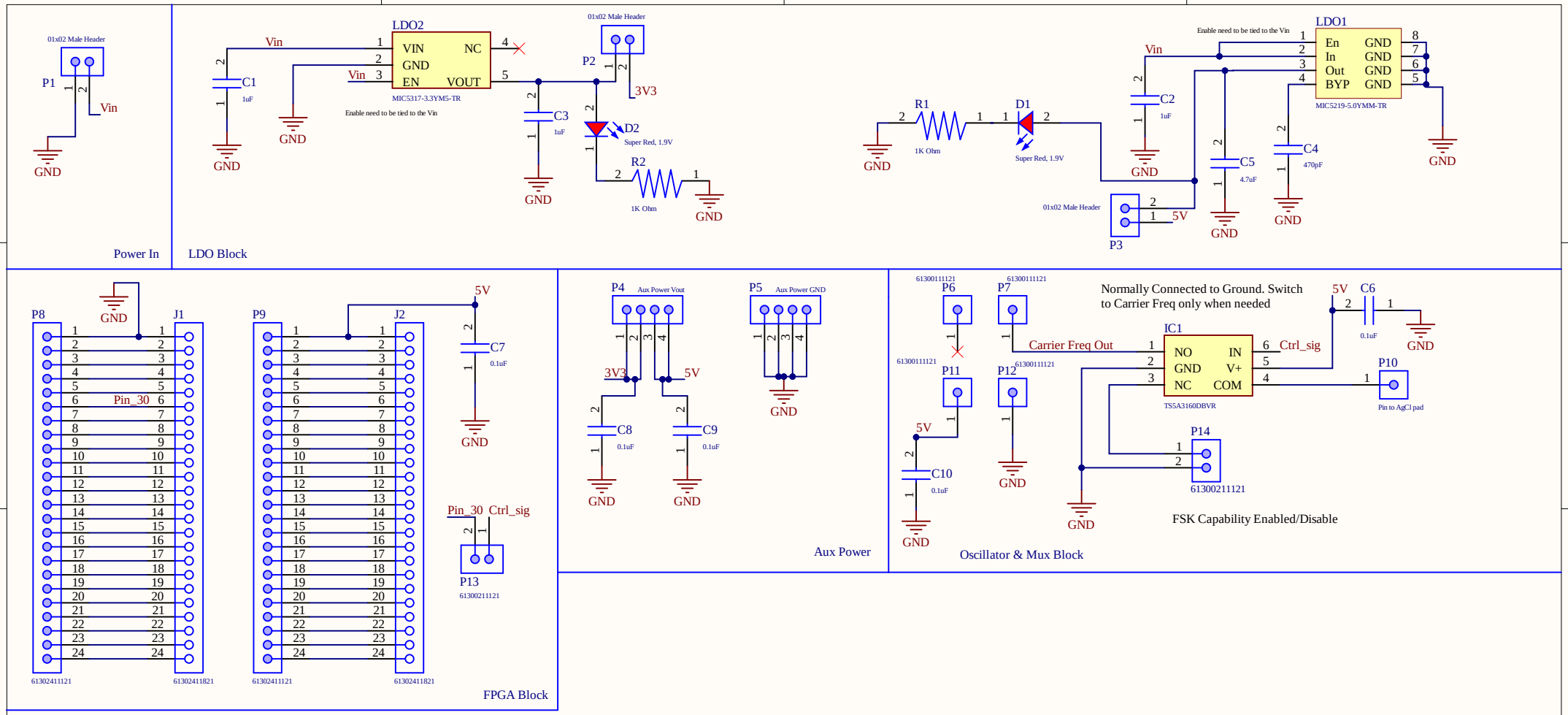

NUS Yoo Group	OPEN SOURCE. FREE to DISTRIBUTE.
Project: BCC Round 1 TX	Variant: [No Variations]
Page Contents: Schematics.SchDoc	Checked By: Jonathan
Size: A4	DWG No: *
Revision 1.1	
Date: 17/8/2021	Drawn By: Lingke
Sheet *	of *