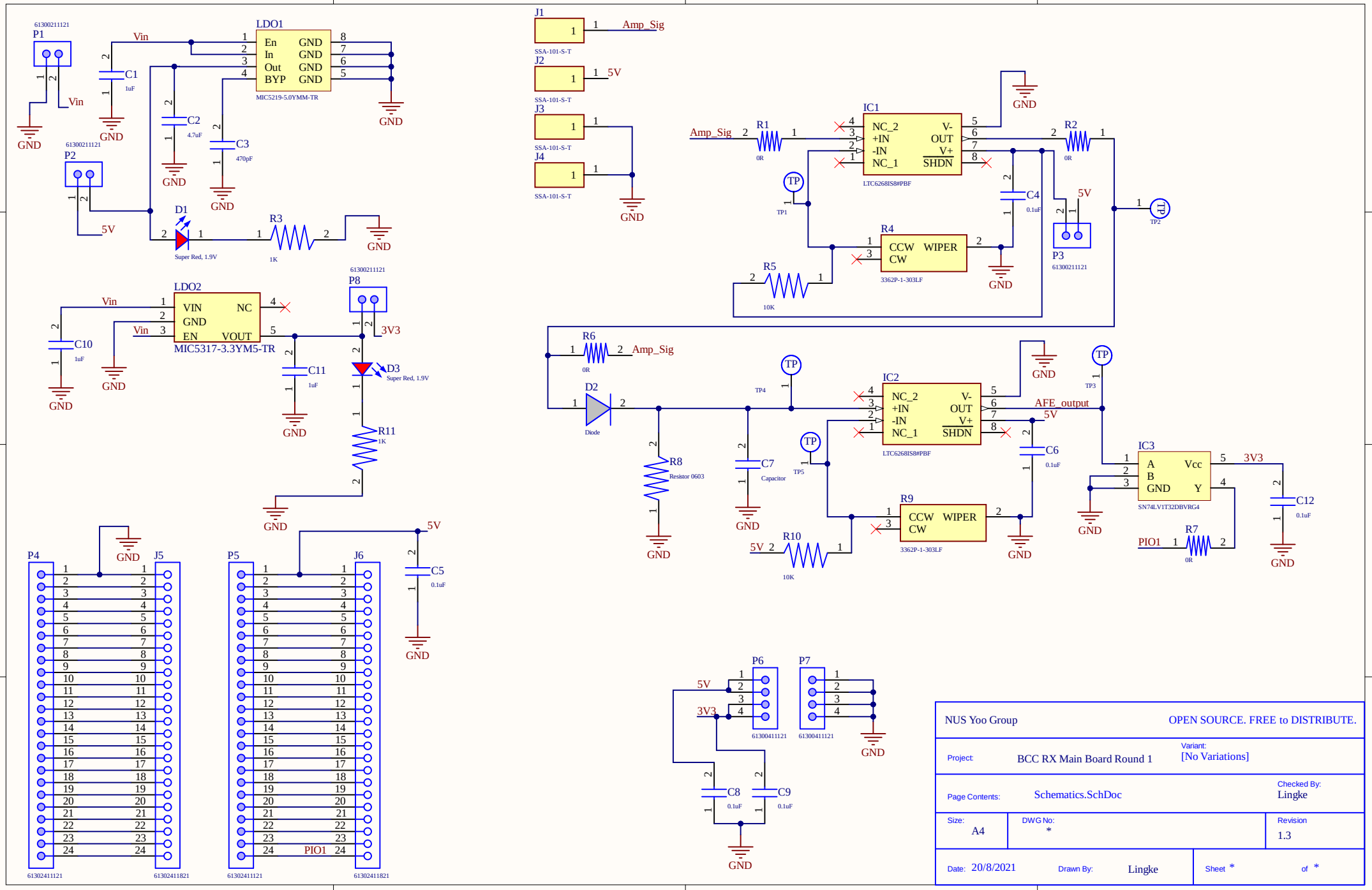
LDO1
MIC5219-5.0YMM-TR
P1
P2
P3
P8
C1 1uF
C2 4.7uF
C3 470pF
D1 Super Red, 1.9V
R3 1K
LDO2
MIC5317-3.3YM5-TR
C10 1uF
C11 1uF
D3 Super Red, 1.9V
R11 1K
J1
J2
J3
J4
SSA-101-S-T
Amp_Sig
IC1
LTC6268IS8#PBF
R1 0R
R2 0R
R4
3362P-1-303LF
R5 10K
C4 0.1uF
R6 0R
D2 Diode
R8 Resistor 0603
C7 Capacitor
IC2
C6 0.1uF
R9
R10 10K
AFE_output
IC3
SN74LV1T32DBVRG4
R7 0R
C12 0.1uF
PIO1
P4
P5
J5
J6
C5 0.1uF
P6
P7
C8 0.1uF
C9 0.1uF
GND
Vin
5V
3V3
TP
NUS Yoo Group
OPEN SOURCE. FREE to DISTRIBUTE.
Project: BCC RX Main Board Round 1
Variant: [No Variations]
Page Contents: Schematics.SchDoc
Checked By: Lingke
Size: A4
DWG No: *
Revision 1.3
Date: 20/8/2021
Drawn By: Lingke
Sheet * of *