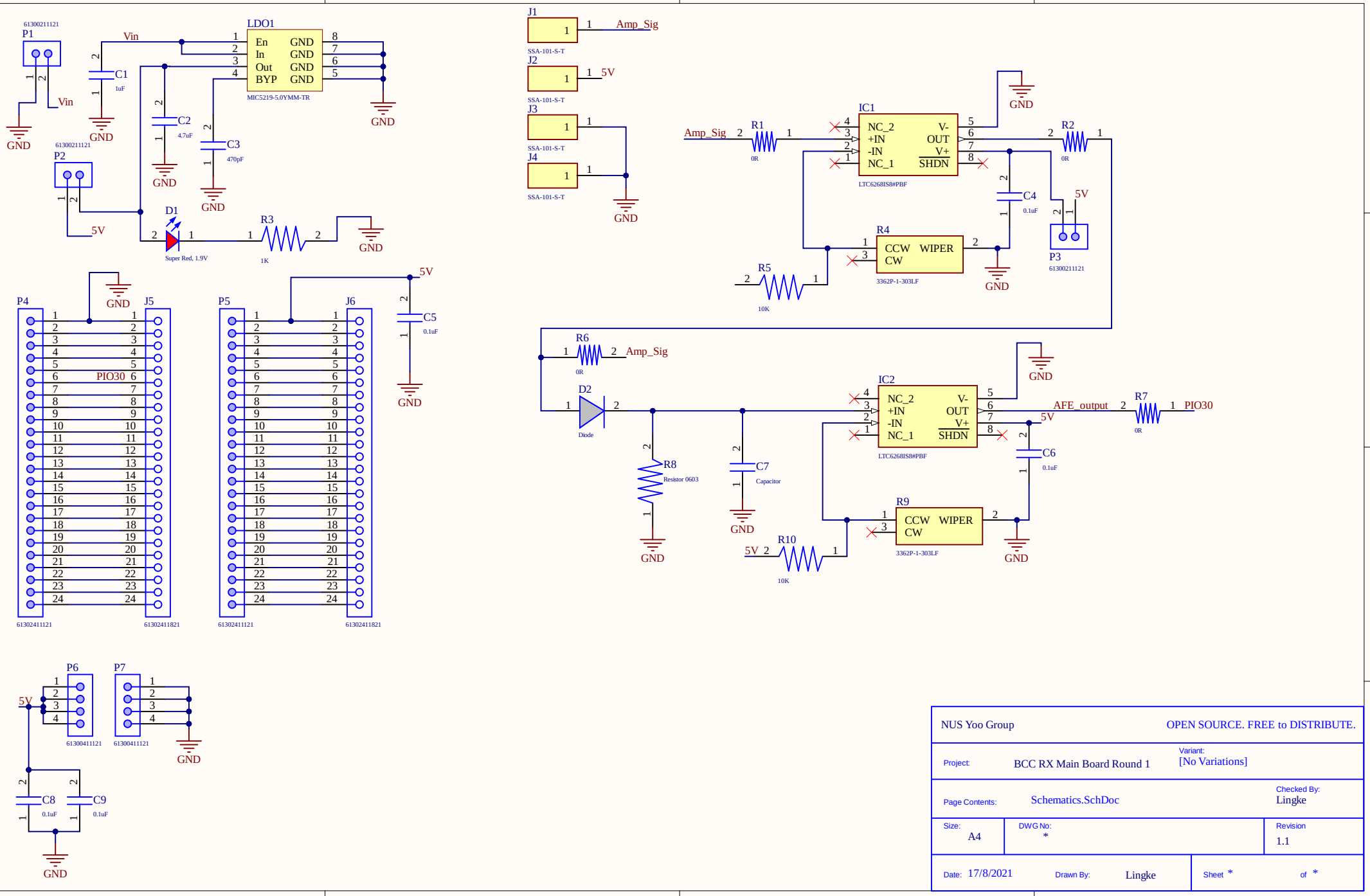
LDO1
MIC5219-5.0YMM-TR
P1
P2
P3
P4
P5
P6
P7
J1
J2
J3
J4
J5
J6
IC1
IC2
LTC6268IS8#PBF
3362P-1-303LF
SSA-101-S-T
Super Red, 1.9V
Diode
Resistor 0603
Capacitor
Vin
5V
GND
Amp_Sig
PIO30
AFE_output
R1
R2
R3
R4
R5
R6
R7
R8
R9
R10
C1
C2
C3
C4
C5
C6
C7
C8
C9
D1
D2
NUS Yoo Group
OPEN SOURCE. FREE to DISTRIBUTE.
Project:
BCC RX Main Board Round 1
Variant:
[No Variations]
Page Contents:
Schematics.SchDoc
Checked By:
Lingke
Size:
A4
DWG No:
*
Revision
1.1
Date:
17/8/2021
Drawn By:
Lingke
Sheet
*
of
*