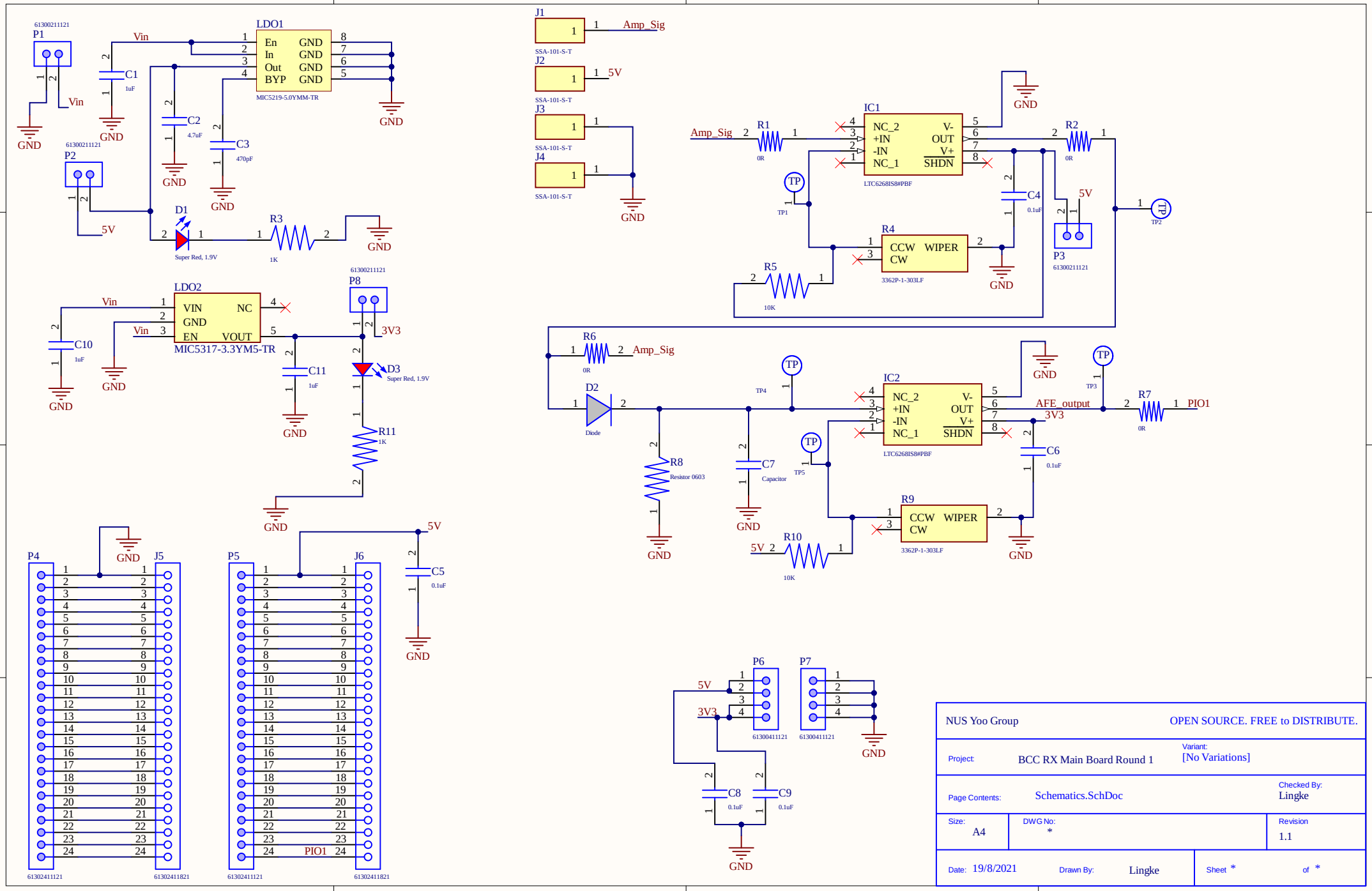
LDO1
MIC5219-5.0YMM-TR
P1
P2
C1
C2
C3
D1
Super Red, 1.9V
R3
LDO2
MIC5317-3.3YM5-TR
C10
C11
P8
D3
R11
J1
J2
J3
J4
SSA-101-S-T
Amp_Sig
5V
IC1
LTC6268IS8#PBF
R1
R2
R4
R5
3362P-1-303LF
P3
C4
R6
D2
Diode
R8
Resistor 0603
C7
Capacitor
IC2
AFE_output
3V3
R7
PIO1
R9
R10
C6
P4
P5
J5
J6
C5
P6
P7
C8
C9
GND
NUS Yoo Group
OPEN SOURCE. FREE to DISTRIBUTE.
Project:
BCC RX Main Board Round 1
Variant:
[No Variations]
Page Contents:
Schematics.SchDoc
Checked By:
Lingke
Size:
A4
DWG No:
*
Revision
1.1
Date:
19/8/2021
Drawn By:
Lingke
Sheet
of