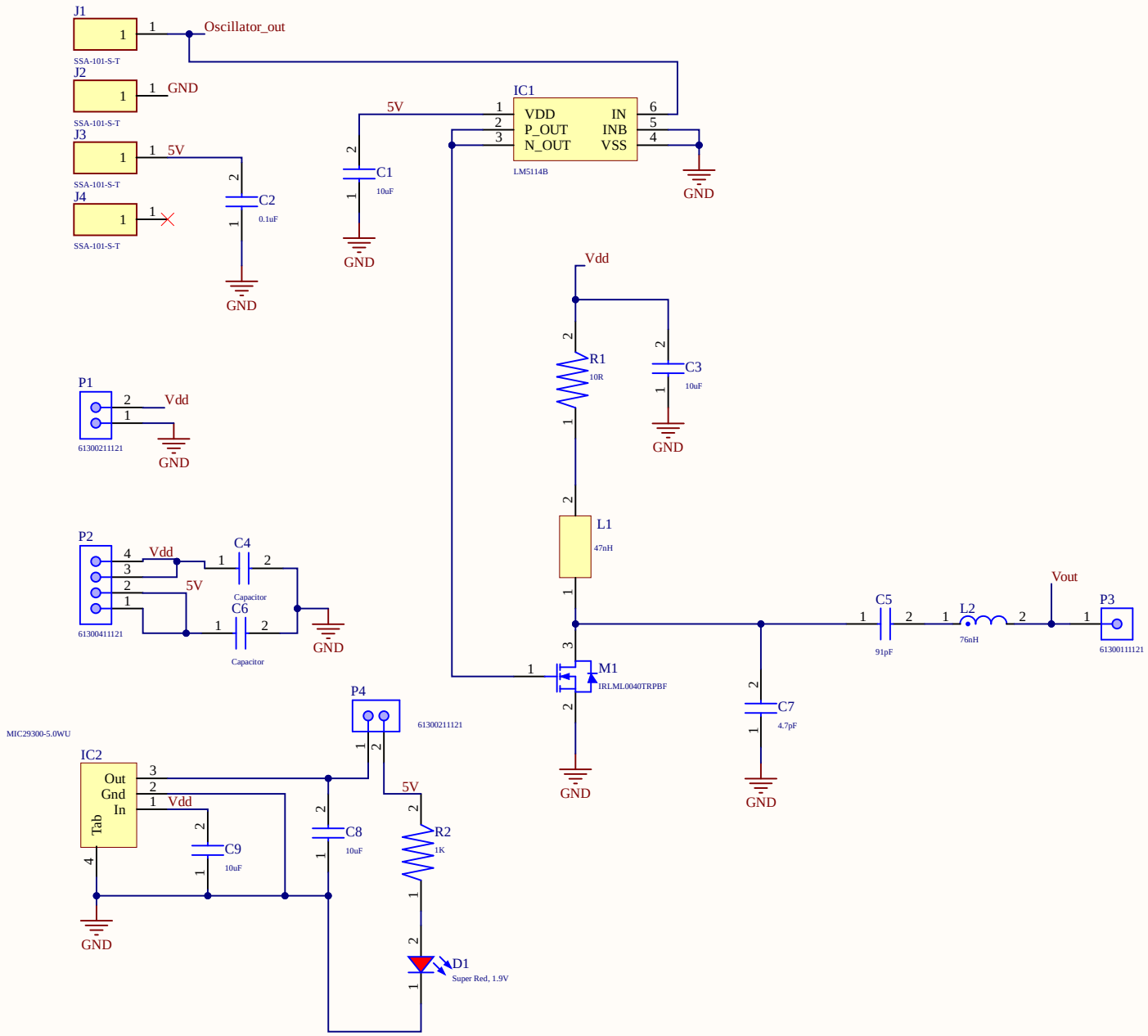

NUS Yoo Group		OPEN SOURCE. FREE to DISTRIBUTE.
Project: BCP TX Round 1		Variant: [No Variations]
Page Contents: schematics.SchDoc		Checked By: Jonathan
Size: A4	DWG No: *	Revision 1.0
Date: 18/10/2021	Drawn By: Lingke	Sheet 1 of 1