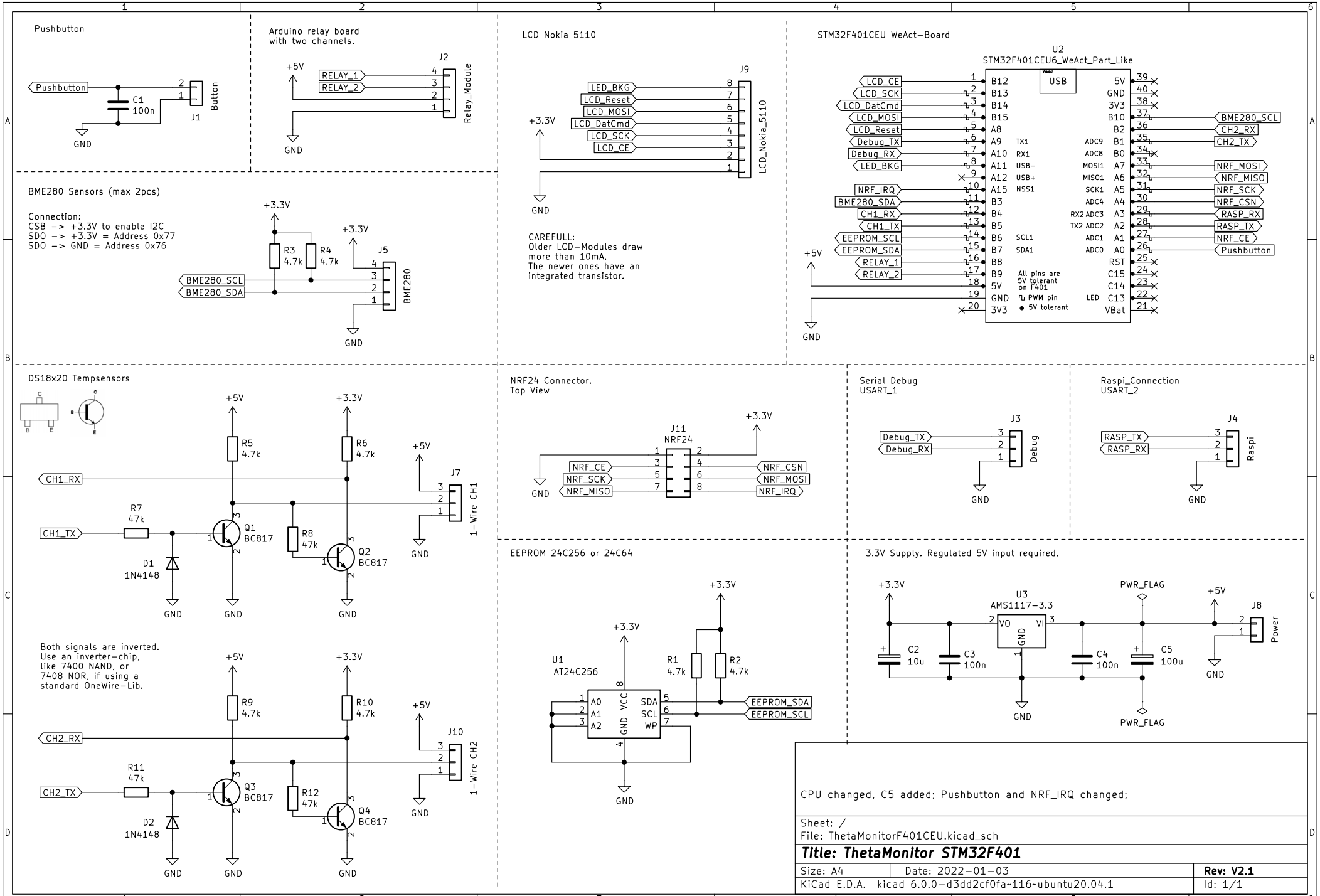

CPU changed, C5 added; Pushbutton and NRF_IRQ changed;

Sheet: /
File: ThetaMonitorF401CEU.kicad_sch

Title: ThetaMonitor STM32F401

Size: A4	Date: 2022-01-03	**Rev: V2.1**
KiCad E.D.A. kicad 6.0.0-d3dd2cf0fa~116~ubuntu20.04.1		Id: 1/1