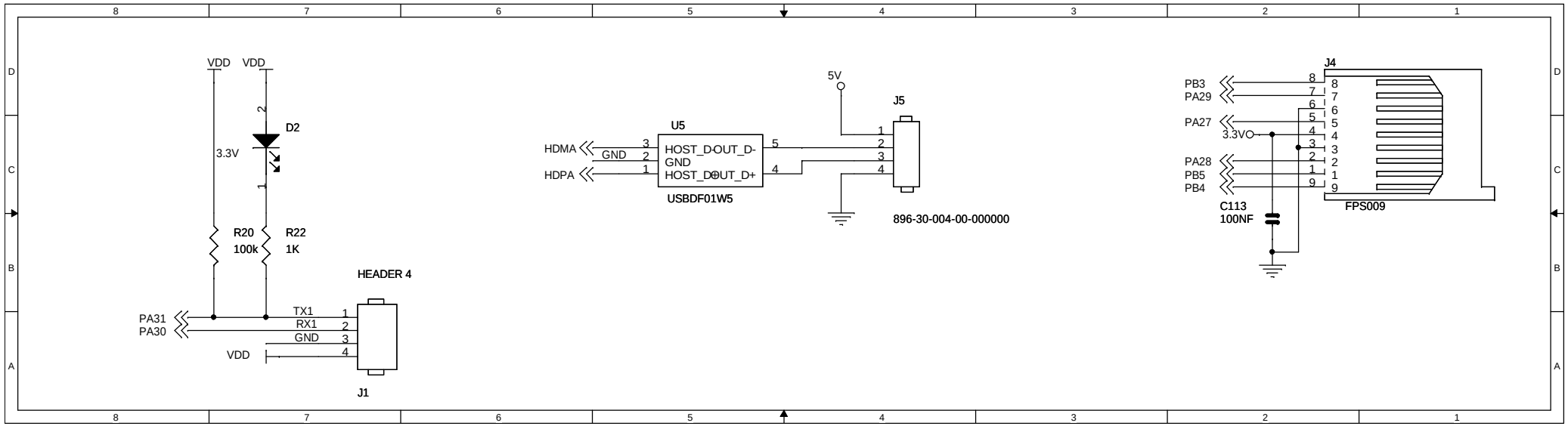
VDD
VDD
D2
3.3V
R20
100k
R22
1K
HEADER 4
PA31
PA30
TX1
RX1
GND
VDD
J1
HDMA
GND
HDPA
U5
HOST_D-
OUT_D-
GND
HOST_D+
OUT_D+
USBDF01W5
5V
J5
896-30-004-00-000000
PB3
PA29
PA27
3.3V
PA28
PB5
PB4
C113
100NF
J4
FPS009

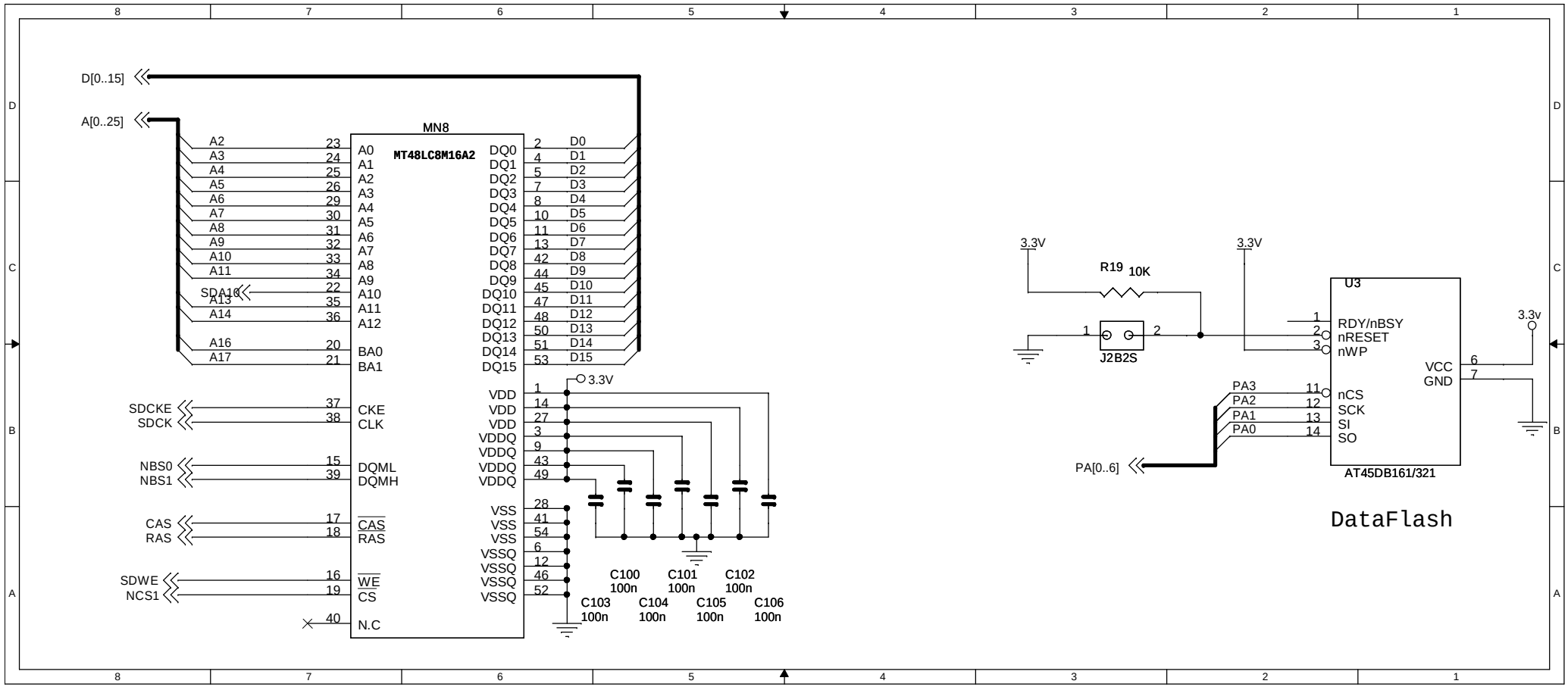
D[0..15]
A[0..25]
MN8
MT48LC8M16A2
A2 23 A0
A3 24 A1
A4 25 A2
A5 26 A3
A6 29 A4
A7 30 A5
A8 31 A6
A9 32 A7
A10 33 A8
A11 34 A9
SDA10 22 A10
A13 35 A11
A14 36 A12
A16 20 BA0
A17 21 BA1
SDCKE 37 CKE
SDCK 38 CLK
NBS0 15 DQML
NBS1 39 DQMH
CAS 17 CAS
RAS 18 RAS
SDWE 16 WE
NCS1 19 CS
40 N.C
DQ0 2 D0
DQ1 4 D1
DQ2 5 D2
DQ3 7 D3
DQ4 8 D4
DQ5 10 D5
DQ6 11 D6
DQ7 13 D7
DQ8 42 D8
DQ9 44 D9
DQ10 45 D10
DQ11 47 D11
DQ12 48 D12
DQ13 50 D13
DQ14 51 D14
DQ15 53 D15
3.3V
VDD 1
VDD 14
VDD 27
VDDQ 3
VDDQ 9
VDDQ 43
VDDQ 49
VSS 28
VSS 41
VSS 54
VSSQ 6
VSSQ 12
VSSQ 46
VSSQ 52
C100 100n
C101 100n
C102 100n
C103 100n
C104 100n
C105 100n
C106 100n
3.3V
R19 10K
J2B2S
1
2
3.3V
U3
RDY/nBSY 1
nRESET 2
nWP 3
VCC 6
GND 7
3.3v
PA3 11 nCS
PA2 12 SCK
PA1 13 SI
PA0 14 SO
PA[0..6]
AT45DB161/321
DataFlash

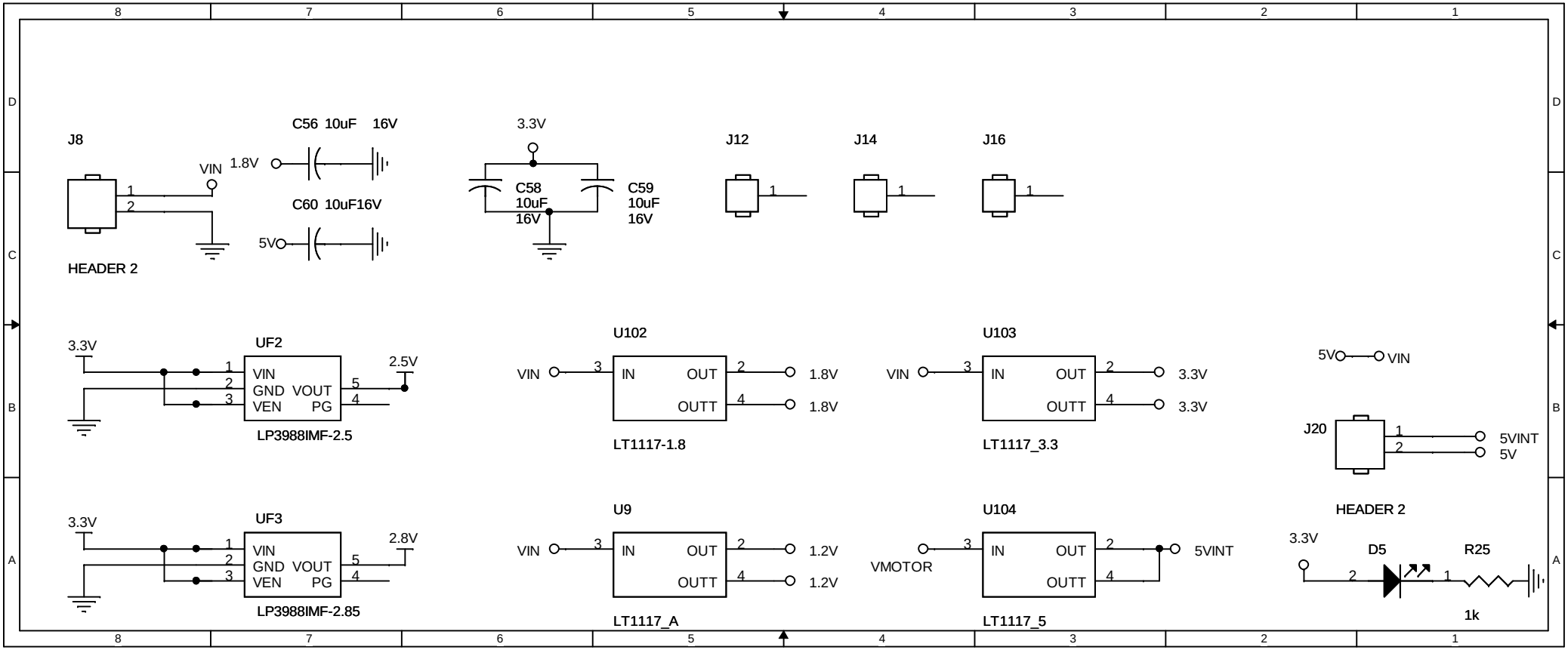
J8
VIN
1.8V
C56 10uF 16V
C60 10uF16V
5V
HEADER 2
3.3V
C58
10uF
16V
C59
10uF
16V
J12
J14
J16
3.3V
UF2
VIN
GND VOUT
VEN PG
2.5V
LP3988IMF-2.5
U102
VIN
IN OUT
OUTT
1.8V
1.8V
LT1117-1.8
U103
VIN
IN OUT
OUTT
3.3V
3.3V
LT1117_3.3
5V
VIN
J20
5VINT
5V
HEADER 2
3.3V
UF3
VIN
GND VOUT
VEN PG
2.8V
LP3988IMF-2.85
U9
VIN
IN OUT
OUTT
1.2V
1.2V
LT1117_A
U104
VMOTOR
IN OUT
OUTT
5VINT
LT1117_5
3.3V
D5
R25
1k

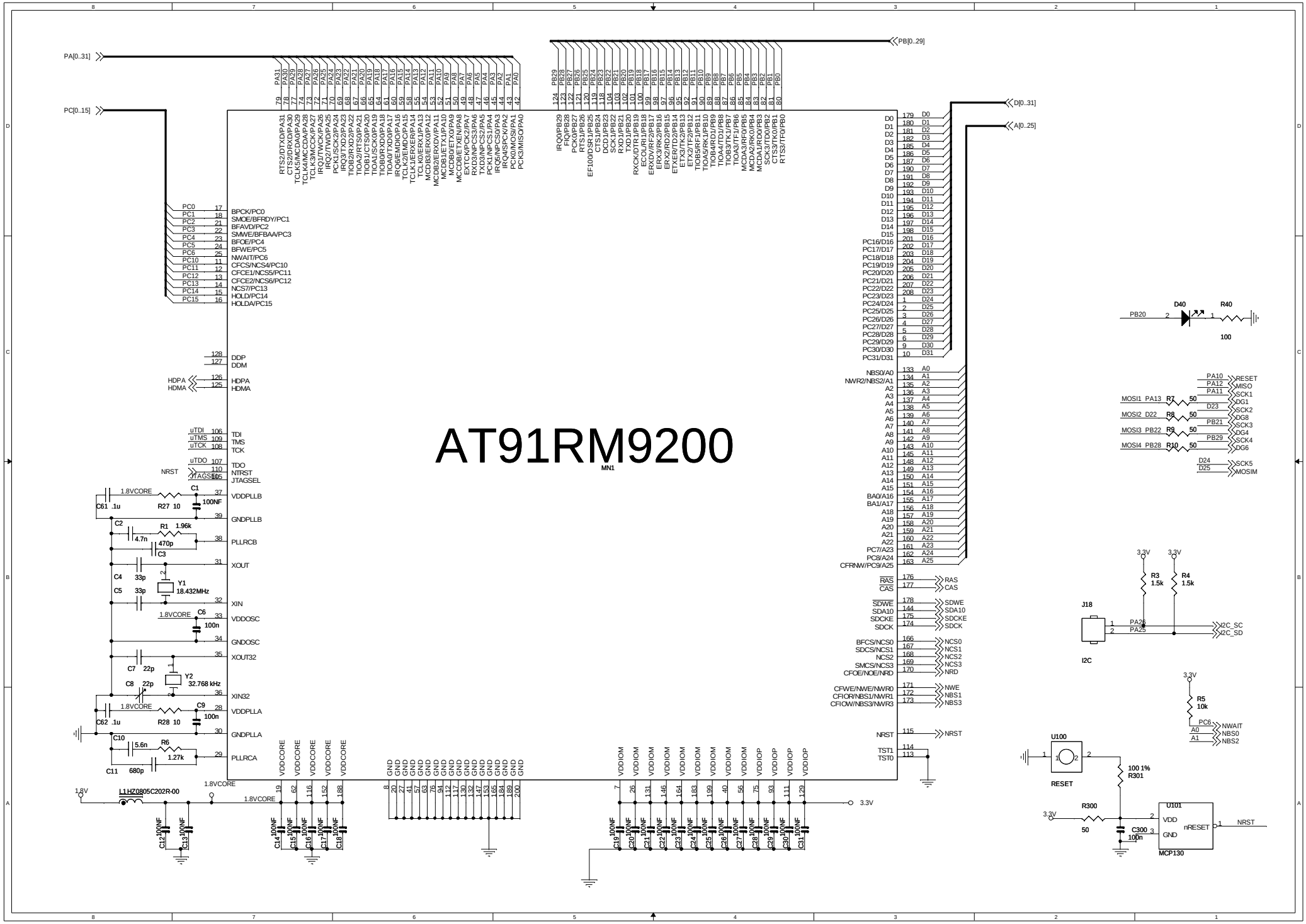
AT91RM9200
MN1
PA[0..31]
PB[0..29]
PC[0..15]
D[0..31]
A[0..25]
BPCK/PC0
SMOE/BFRDY/PC1
BFAVD/PC2
SMWE/BFBAA/PC3
BFOE/PC4
BFWE/PC5
NWAIT/PC6
CFCS/NCS4/PC10
CFCE1/NCS5/PC11
CFCE2/NCS6/PC12
NCS7/PC13
HOLD/PC14
HOLDA/PC15
DDP
DDM
HDPA
HDMA
TDI
TMS
TCK
TDO
NTRST
JTAGSEL
VDDPLLB
GNDPLLB
PLLRCB
XOUT
XIN
VDDOSC
GNDOSC
XOUT32
XIN32
VDDPLLA
GNDPLLA
PLLRCA
1.8VCORE
1.8V
3.3V
L1 HZ0805C202R-00
Y1 18.432MHz
Y2 32.768 kHz
NRST
RAS
CAS
SDWE
SDA10
SDCKE
SDCK
NCS0
NCS1
NCS2
NCS3
NRD
NWE
NBS1
NBS3
TST1
TST0
D40
R40
100
MOSI1 PA13
MOSI2 D22
MOSI3 PB22
MOSI4 PB28
RESET
MISO
SCK1
DG1
SCK2
DG8
SCK3
DG4
SCK4
DG6
SCK5
MOSIM
J18
I2C
I2C_SC
I2C_SD
R3 1.5k
R4 1.5k
R5 10k
NWAIT
NBS0
NBS2
U100
RESET
R301 100 1%
R300 50
C300 100n
U101
MCP130
VDD
nRESET
GND

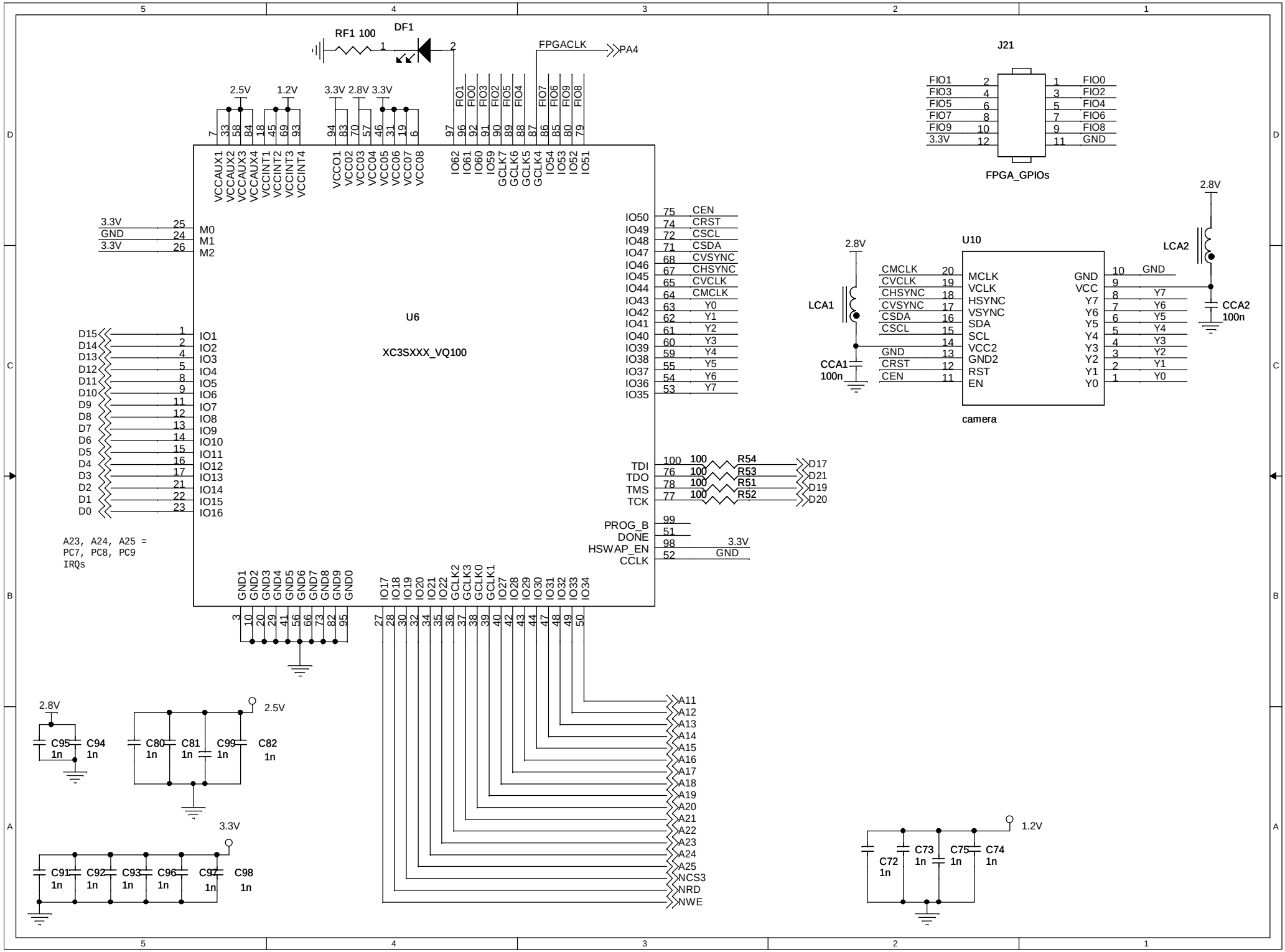
RF1 100
DF1
FPGACLK
PA4
J21
FIO1 2 1 FIO0
FIO3 4 3 FIO2
FIO5 6 5 FIO4
FIO7 8 7 FIO6
FIO9 10 9 FIO8
3.3V 12 11 GND
FPGA_GPIOs
2.5V
1.2V
3.3V 2.8V 3.3V
VCCAUX1 VCCAUX2 VCCAUX3 VCCAUX4 VCCINT1 VCCINT2 VCCINT3 VCCINT4
VCCO1 VCCO2 VCCO3 VCCO4 VCCO5 VCCO6 VCCO7 VCCO8
IO62 IO61 IO60 IO59 GCLK7 GCLK6 GCLK5 GCLK4 IO54 IO53 IO52 IO51
FIO1 FIO0 FIO3 FIO2 FIO5 FIO4 FIO7 FIO6 FIO9 FIO8
3.3V 25 M0
GND 24 M1
3.3V 26 M2
U6
XC3SXXX_VQ100
IO50 75 CEN
IO49 74 CRST
IO48 72 CSCL
IO47 71 CSDA
IO46 68 CVSYNC
IO45 67 CHSYNC
IO44 65 CVCLK
IO43 64 CMCLK
IO42 63 Y0
IO41 62 Y1
IO40 61 Y2
IO39 60 Y3
IO38 59 Y4
IO37 55 Y5
IO36 54 Y6
IO35 53 Y7
D15 1 IO1
D14 2 IO2
D13 4 IO3
D12 5 IO4
D11 8 IO5
D10 9 IO6
D9 11 IO7
D8 12 IO8
D7 13 IO9
D6 14 IO10
D5 15 IO11
D4 16 IO12
D3 17 IO13
D2 21 IO14
D1 22 IO15
D0 23 IO16
TDI 100 100 R54 D17
TDO 76 100 R53 D21
TMS 78 100 R51 D19
TCK 77 100 R52 D20
PROG_B 99
DONE 51
HSWAP_EN 98 3.3V
CCLK 52 GND
A23, A24, A25 =
PC7, PC8, PC9
IRQs
GND1 GND2 GND3 GND4 GND5 GND6 GND7 GND8 GND9 GND0
3 10 20 29 41 56 66 73 82 95
IO17 IO18 IO19 IO20 IO21 IO22 GCLK2 GCLK3 GCLK0 GCLK1 IO27 IO28 IO29 IO30 IO31 IO32 IO33 IO34
27 28 30 32 34 35 36 37 38 39 40 42 43 44 47 48 49 50
A11 A12 A13 A14 A15 A16 A17 A18 A19 A20 A21 A22 A23 A24 A25 NCS3 NRD NWE
2.8V
LCA1
CCA1
100n
U10
camera
CMCLK 20 MCLK
CVCLK 19 VCLK
CHSYNC 18 HSYNC
CVSYNC 17 VSYNC
CSDA 16 SDA
CSCL 15 SCL
14 VCC2
GND 13 GND2
CRST 12 RST
CEN 11 EN
GND 10 GND
9 VCC
8 Y7 Y7
7 Y6 Y6
6 Y5 Y5
5 Y4 Y4
4 Y3 Y3
3 Y2 Y2
2 Y1 Y1
1 Y0 Y0
LCA2
CCA2
100n
2.8V
C95 1n
C94 1n
2.5V
C80 1n
C81 1n
C99 1n
C82 1n
3.3V
C91 1n
C92 1n
C93 1n
C96 1n
C97 1n
C98 1n
1.2V
C72 1n
C73 1n
C75 1n
C74 1n

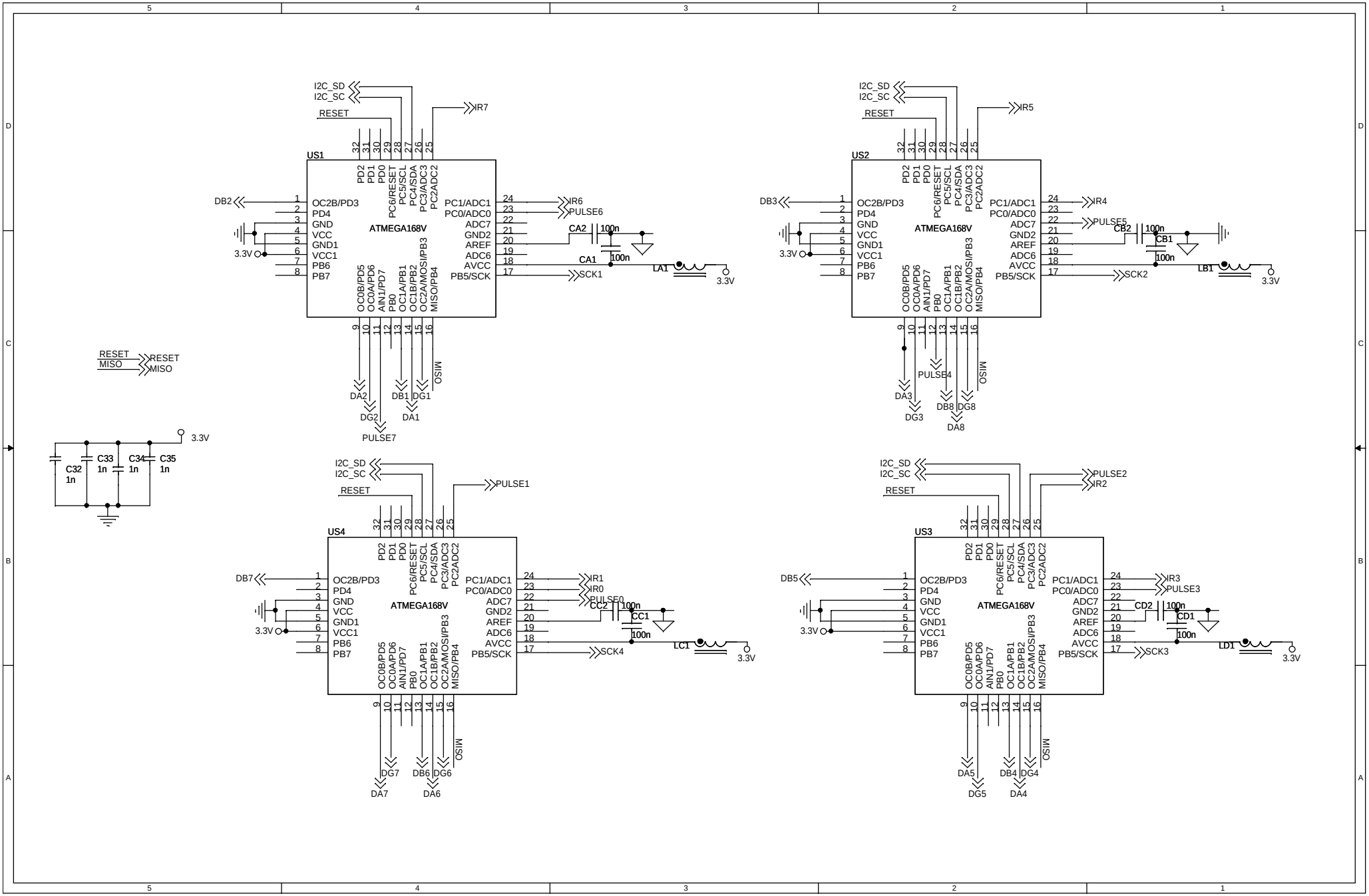
US1
ATMEGA168V
I2C_SD
I2C_SC
RESET
IR7
IR6
PULSE6
SCK1
DB2
DA2
DG2
PULSE7
DB1
DG1
DA1
MISO
CA1
CA2
100n
LA1
3.3V
US2
ATMEGA168V
IR5
IR4
PULSE5
SCK2
DB3
DA3
DG3
PULSE4
DB8
DG8
DA8
CB1
CB2
LB1
US3
ATMEGA168V
PULSE2
IR2
IR3
PULSE3
SCK3
DB5
DA5
DG5
DB4
DG4
DA4
CD1
CD2
LD1
US4
ATMEGA168V
PULSE1
IR1
IR0
PULSE0
SCK4
DB7
DA7
DG7
DB6
DG6
DA6
CC1
CC2
LC1
C32 1n
C33 1n
C34 1n
C35 1n

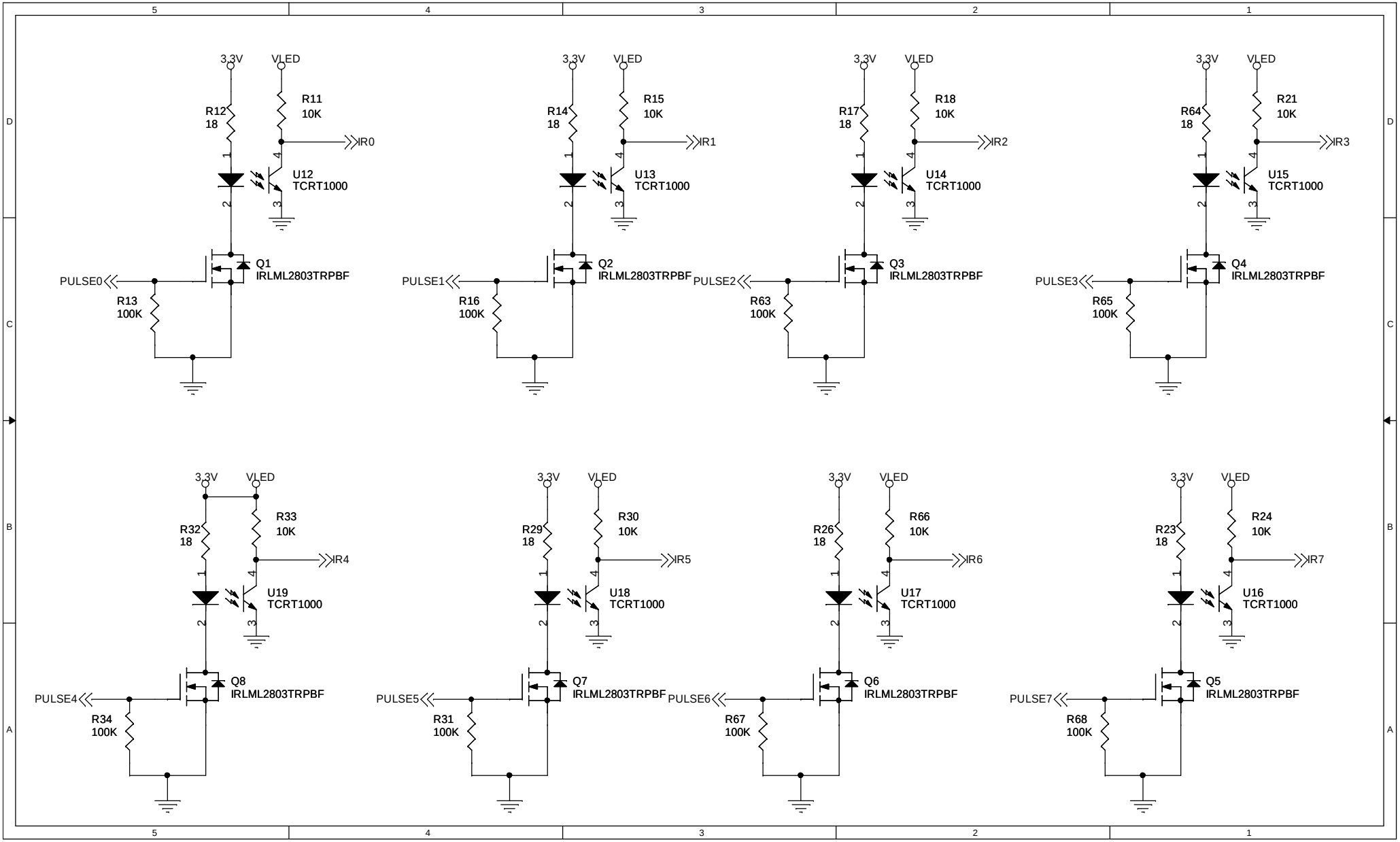
3.3V
VLED
R12
18
R11
10K
IR0
U12
TCRT1000
Q1
IRLML2803TRPBF
PULSE0
R13
100K
R14
18
R15
10K
IR1
U13
TCRT1000
Q2
IRLML2803TRPBF
PULSE1
R16
100K
R17
18
R18
10K
IR2
U14
TCRT1000
Q3
IRLML2803TRPBF
PULSE2
R63
100K
R64
18
R21
10K
IR3
U15
TCRT1000
Q4
IRLML2803TRPBF
PULSE3
R65
100K
R32
18
R33
10K
IR4
U19
TCRT1000
Q8
IRLML2803TRPBF
PULSE4
R34
100K
R29
18
R30
10K
IR5
U18
TCRT1000
Q7
IRLML2803TRPBF
PULSE5
R31
100K
R26
18
R66
10K
IR6
U17
TCRT1000
Q6
IRLML2803TRPBF
PULSE6
R67
100K
R23
18
R24
10K
IR7
U16
TCRT1000
Q5
IRLML2803TRPBF
PULSE7
R68
100K

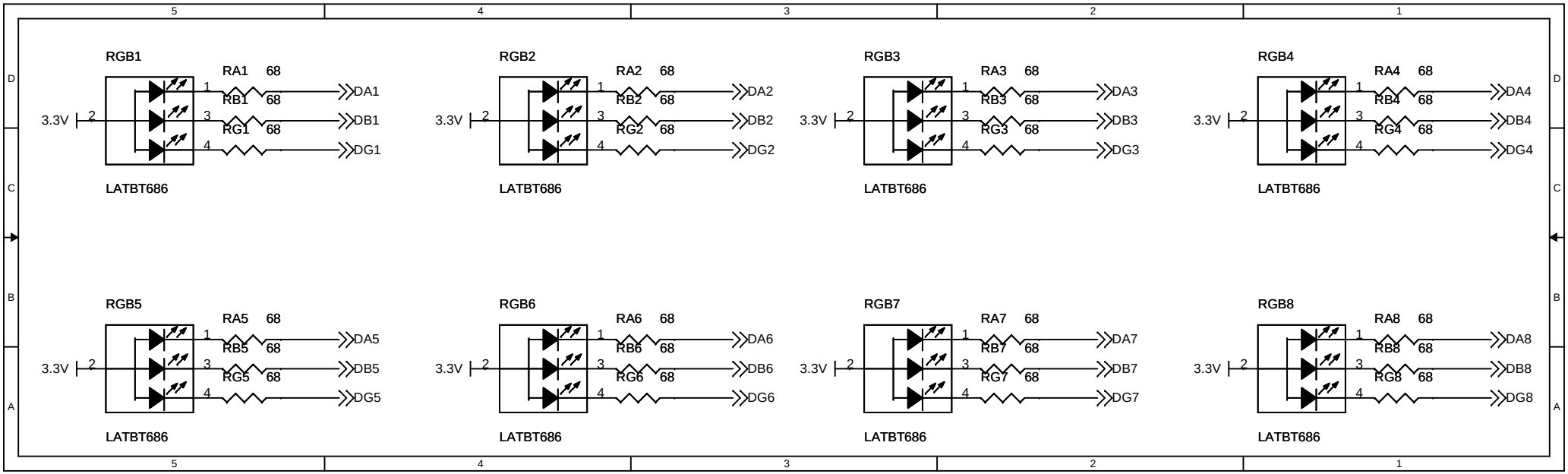
RGB1
RA1 68
RB1 68
RG1 68
3.3V
DA1
DB1
DG1
LATBT686
RGB2
RA2 68
RB2 68
RG2 68
3.3V
DA2
DB2
DG2
LATBT686
RGB3
RA3 68
RB3 68
RG3 68
3.3V
DA3
DB3
DG3
LATBT686
RGB4
RA4 68
RB4 68
RG4 68
3.3V
DA4
DB4
DG4
LATBT686
RGB5
RA5 68
RB5 68
RG5 68
3.3V
DA5
DB5
DG5
LATBT686
RGB6
RA6 68
RB6 68
RG6 68
3.3V
DA6
DB6
DG6
LATBT686
RGB7
RA7 68
RB7 68
RG7 68
3.3V
DA7
DB7
DG7
LATBT686
RGB8
RA8 68
RB8 68
RG8 68
3.3V
DA8
DB8
DG8
LATBT686

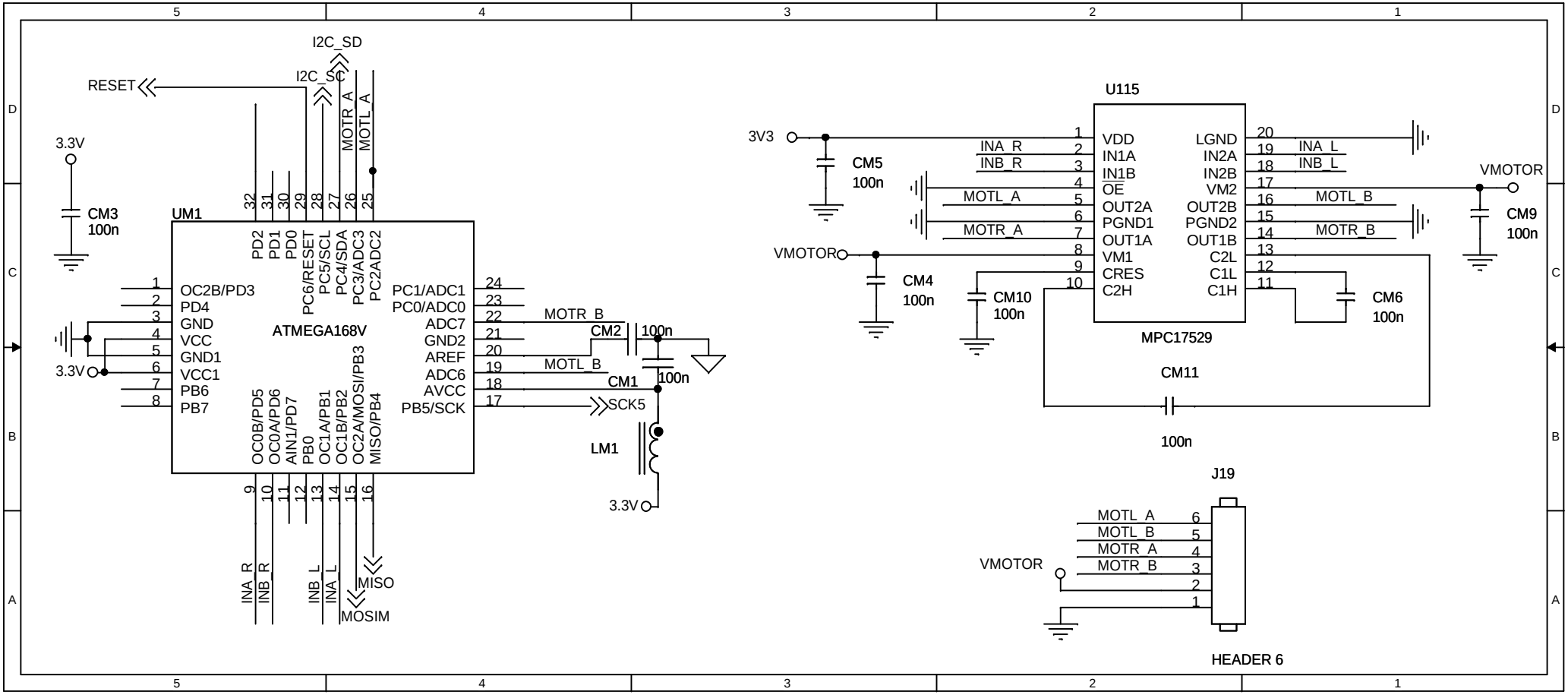
I2C_SD
RESET
I2C_SC
MOTR_A
MOTL_A
3.3V
CM3
100n
UM1
ATMEGA168V
OC2B/PD3
PD4
GND
VCC
GND1
VCC1
PB6
PB7
PD2
PD1
PD0
PC6/RESET
PC5/SCL
PC4/SDA
PC3/ADC3
PC2ADC2
PC1/ADC1
PC0/ADC0
ADC7
GND2
AREF
ADC6
AVCC
PB5/SCK
OC0B/PD5
OC0A/PD6
AIN1/PD7
PB0
OC1A/PB1
OC1B/PB2
OC2A/MOSI/PB3
MISO/PB4
INA_R
INB_R
INB_L
INA_L
MISO
MOSIM
MOTR_B
CM2
100n
MOTL_B
CM1
100n
SCK5
LM1
3.3V
U115
MPC17529
3V3
CM5
100n
VMOTOR
CM4
100n
CM10
100n
VDD
IN1A
IN1B
OE
OUT2A
PGND1
OUT1A
VM1
CRES
C2H
LGND
IN2A
IN2B
VM2
OUT2B
PGND2
OUT1B
C2L
C1L
C1H
INA_R
INB_R
MOTL_A
MOTR_A
INA_L
INB_L
MOTL_B
MOTR_B
CM9
100n
CM6
100n
CM11
100n
J19
HEADER 6
MOTL_A
MOTL_B
MOTR_A
MOTR_B
VMOTOR

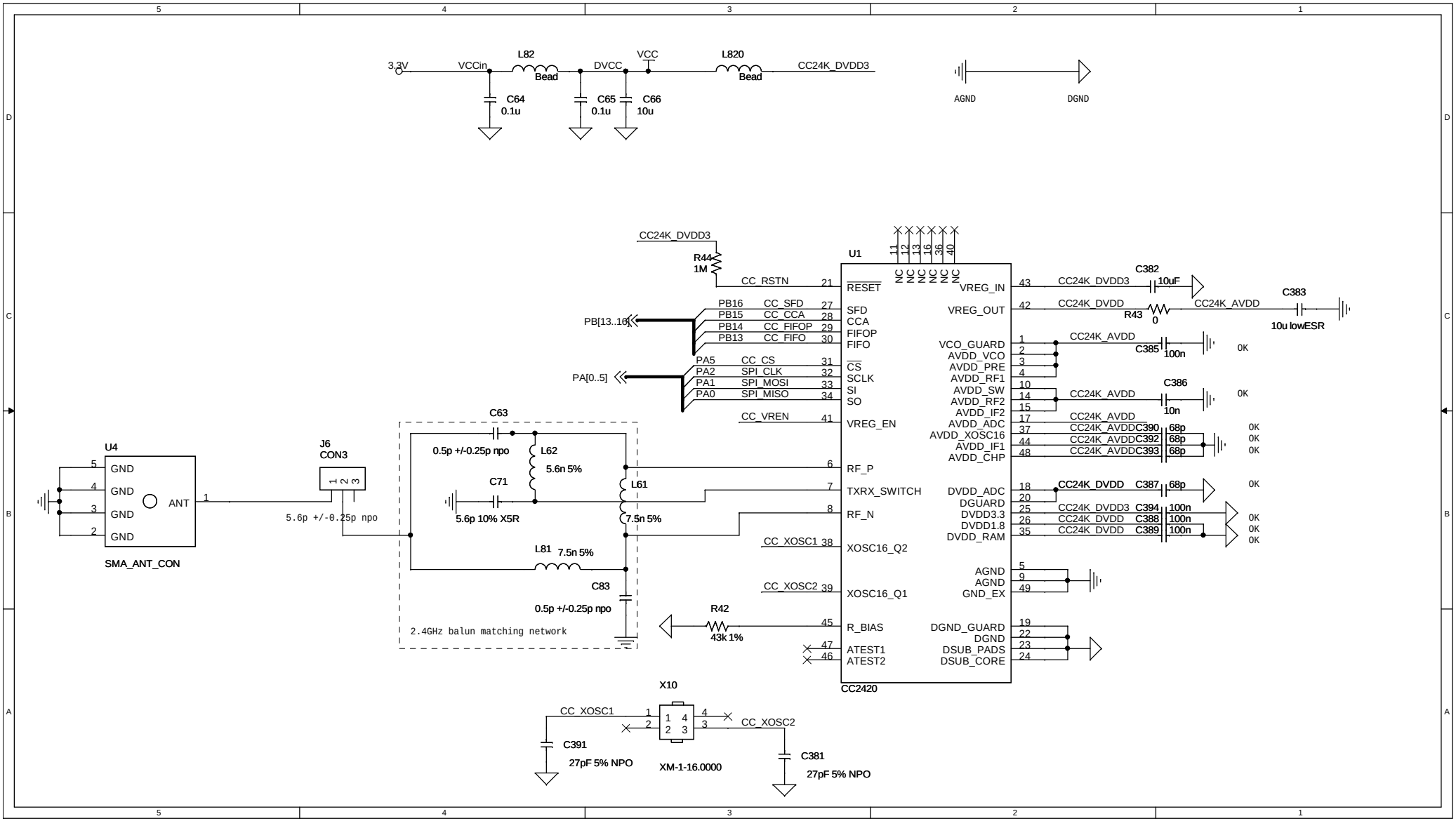
3.3V
VCCin
L82
Bead
DVCC
VCC
L820
Bead
CC24K_DVDD3
C64
0.1u
C65
0.1u
C66
10u
AGND
DGND
CC24K_DVDD3
R44
1M
U1
CC_RSTN
RESET
PB16 CC_SFD
PB15 CC_CCA
PB14 CC_FIFOP
PB13 CC_FIFO
PB[13..16]
PA5 CC_CS
PA2 SPI_CLK
PA1 SPI_MOSI
PA0 SPI_MISO
PA[0..5]
CC_VREN
VREG_EN
RF_P
TXRX_SWITCH
RF_N
CC_XOSC1
XOSC16_Q2
CC_XOSC2
XOSC16_Q1
R_BIAS
ATEST1
ATEST2
VREG_IN
VREG_OUT
VCO_GUARD
AVDD_VCO
AVDD_PRE
AVDD_RF1
AVDD_SW
AVDD_RF2
AVDD_IF2
AVDD_ADC
AVDD_XOSC16
AVDD_IF1
AVDD_CHP
DVDD_ADC
DGUARD
DVDD3.3
DVDD1.8
DVDD_RAM
AGND
GND_EX
DGND_GUARD
DGND
DSUB_PADS
DSUB_CORE
CC24K_DVDD
CC24K_AVDD
C382
10uF
C383
10u lowESR
R43
0
C385
100n
C386
10n
C390
C392
C393
68p
C387
C394
C388
C389
100n
OK
CC2420
U4
GND
ANT
SMA_ANT_CON
J6
CON3
5.6p +/-0.25p npo
C63
0.5p +/-0.25p npo
L62
5.6n 5%
C71
5.6p 10% X5R
L61
7.5n 5%
L81
7.5n 5%
C83
0.5p +/-0.25p npo
2.4GHz balun matching network
R42
43k 1%
X10
CC_XOSC1
CC_XOSC2
C391
27pF 5% NPO
XM-1-16.0000
C381
27pF 5% NPO