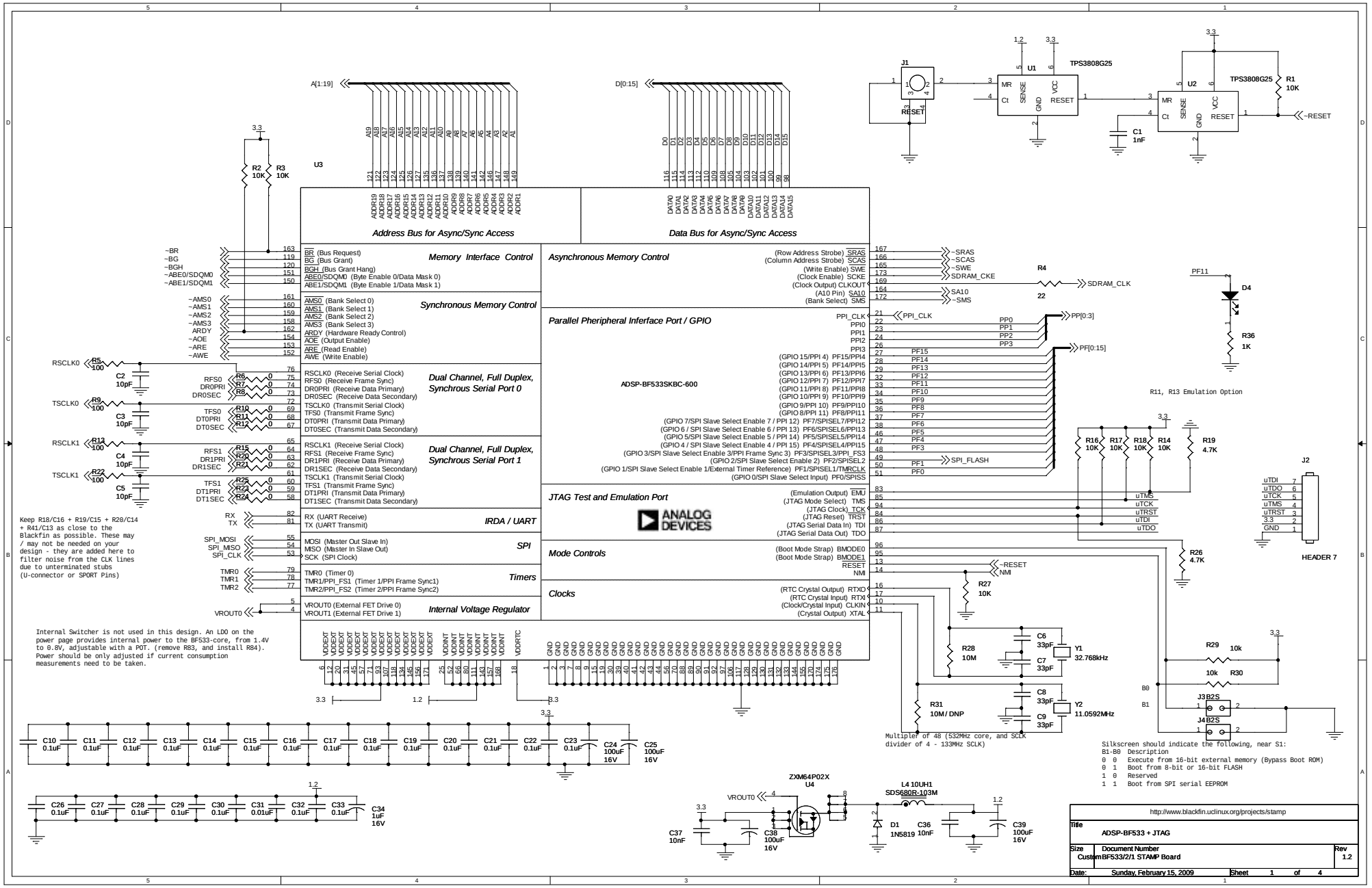
U3
ADSP-BF533SKBC-600
Address Bus for Async/Sync Access
Data Bus for Async/Sync Access
Memory Interface Control
Synchronous Memory Control
Dual Channel, Full Duplex, Synchrous Serial Port 0
Dual Channel, Full Duplex, Synchrous Serial Port 1
IRDA / UART
SPI
Timers
Internal Voltage Regulator
Asynchronous Memory Control
Parallel Pheripheral Inferface Port / GPIO
JTAG Test and Emulation Port
Mode Controls
Clocks
ANALOG DEVICES
J1
RESET
U1
TPS3808G25
U2
TPS3808G25
R1 10K
C1 1nF
R4 22
D4
R36 1K
R11, R13 Emulation Option
R16 10K
R17 10K
R18 10K
R14 10K
R19 4.7K
R26 4.7K
J2
HEADER 7
R27 10K
R28 10M
R31 10M / DNP
Multiplier of 48 (532MHz core, and SCLK divider of 4 - 133MHz SCLK)
Y1 32.768kHz
Y2 11.0592MHz
R29 10k
R30 10k
J3 B2S
J4 B2S
Silkscreen should indicate the following, near S1:
B1-B0 Description
0 0 Execute from 16-bit external memory (Bypass Boot ROM)
0 1 Boot from 8-bit or 16-bit FLASH
1 0 Reserved
1 1 Boot from SPI serial EEPROM
Keep R18/C16 + R19/C15 + R20/C14 + R41/C13 as close to the Blackfin as possible. These may / may not be needed on your design - they are added here to filter noise from the CLK lines due to unterminated stubs (U-connector or SPORT Pins)
Internal Switcher is not used in this design. An LDO on the power page provides internal power to the BF533-core, from 1.4V to 0.8V, adjustable with a POT. (remove R83, and install R84). Power should be only adjusted if current consumption measurements need to be taken.
ZXM64P02X
U4
L4 10UH1
SDS680R-103M
D1 1N5819
http://www.blackfin.uclinux.org/projects/stamp
Title
ADSP-BF533 + JTAG
Size
Custom
Document Number
BF533/2/1 STAMP Board
Rev
1.2
Date: Sunday, February 15, 2009
Sheet 1 of 4

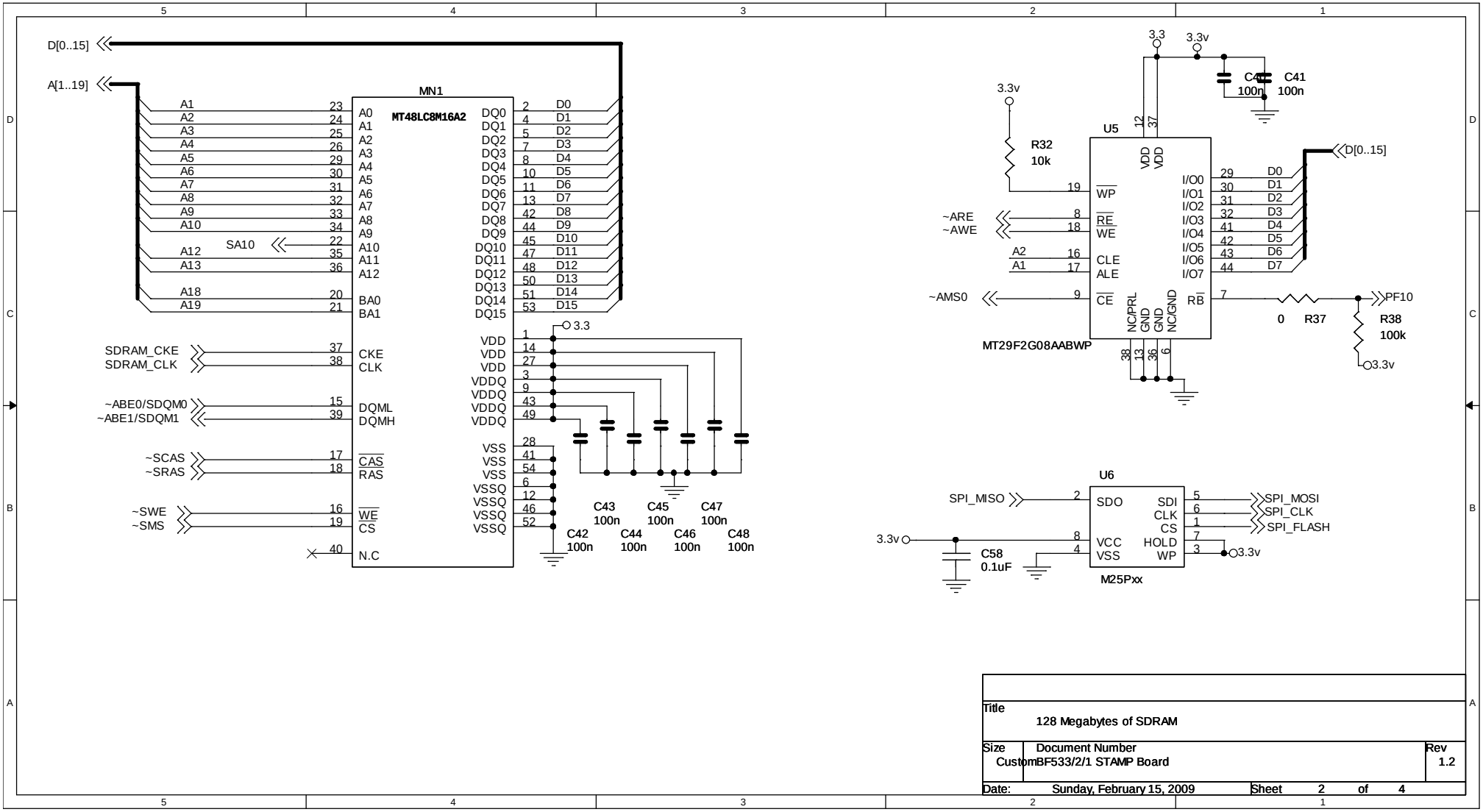


| | | |
|---|---|---|
| Title | 128 Megabytes of SDRAM | |
| Size | Document Number | Rev |
| Custom | BF533/2/1 STAMP Board | 1.2 |
| Date: Sunday, February 15, 2009 | Sheet 2 of 4 | |

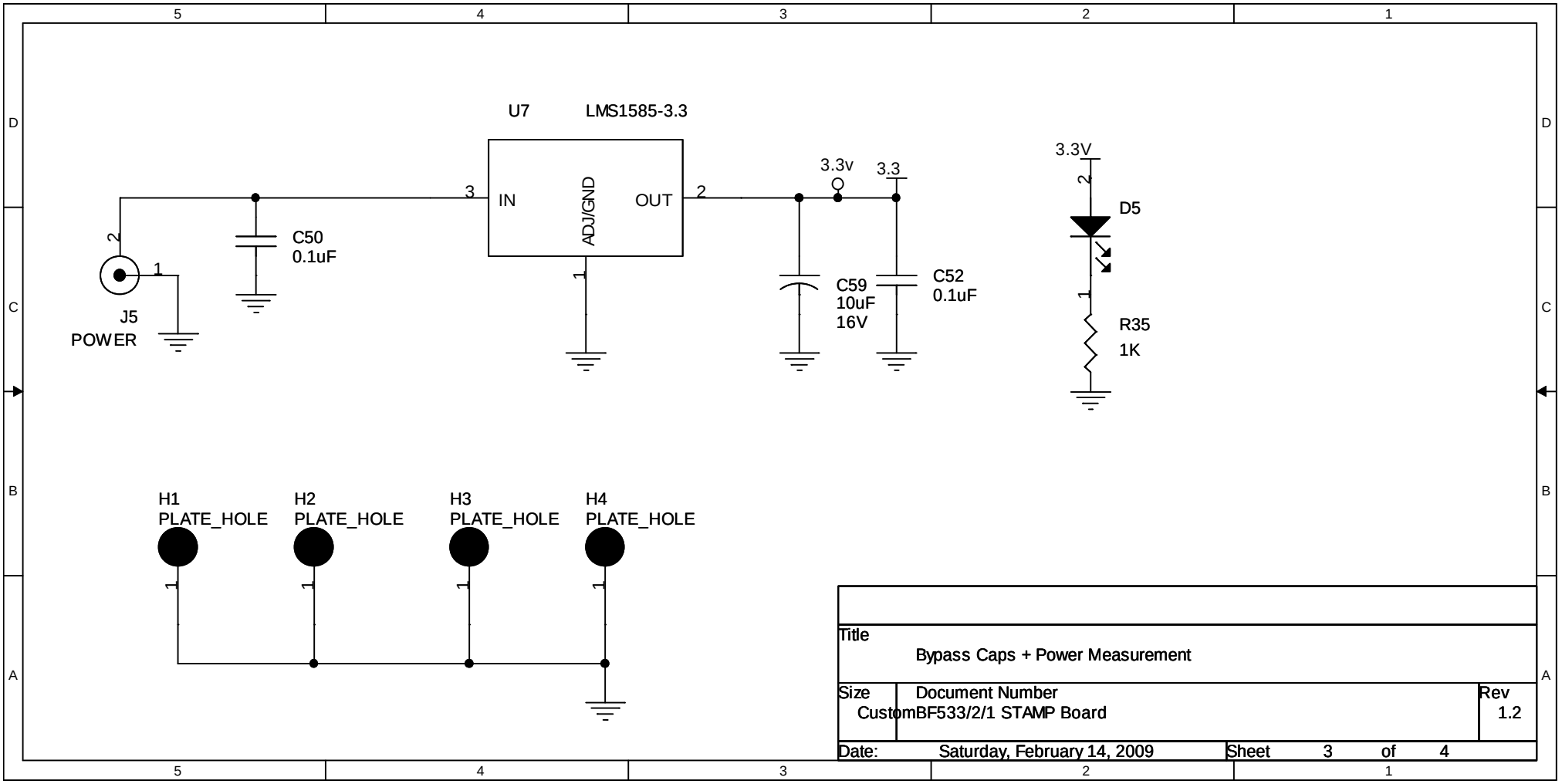
U7
LMS1585-3.3
IN
ADJ/GND
OUT
3
2
1
3.3v
3.3
3.3V
D5
R35
1K
C50
0.1uF
C59
10uF
16V
C52
0.1uF
J5
POWER
H1
PLATE_HOLE
H2
PLATE_HOLE
H3
PLATE_HOLE
H4
PLATE_HOLE
Title
Bypass Caps + Power Measurement
Size
Custom
Document Number
BF533/2/1 STAMP Board
Rev
1.2
Date:
Saturday, February 14, 2009
Sheet
3
of
4

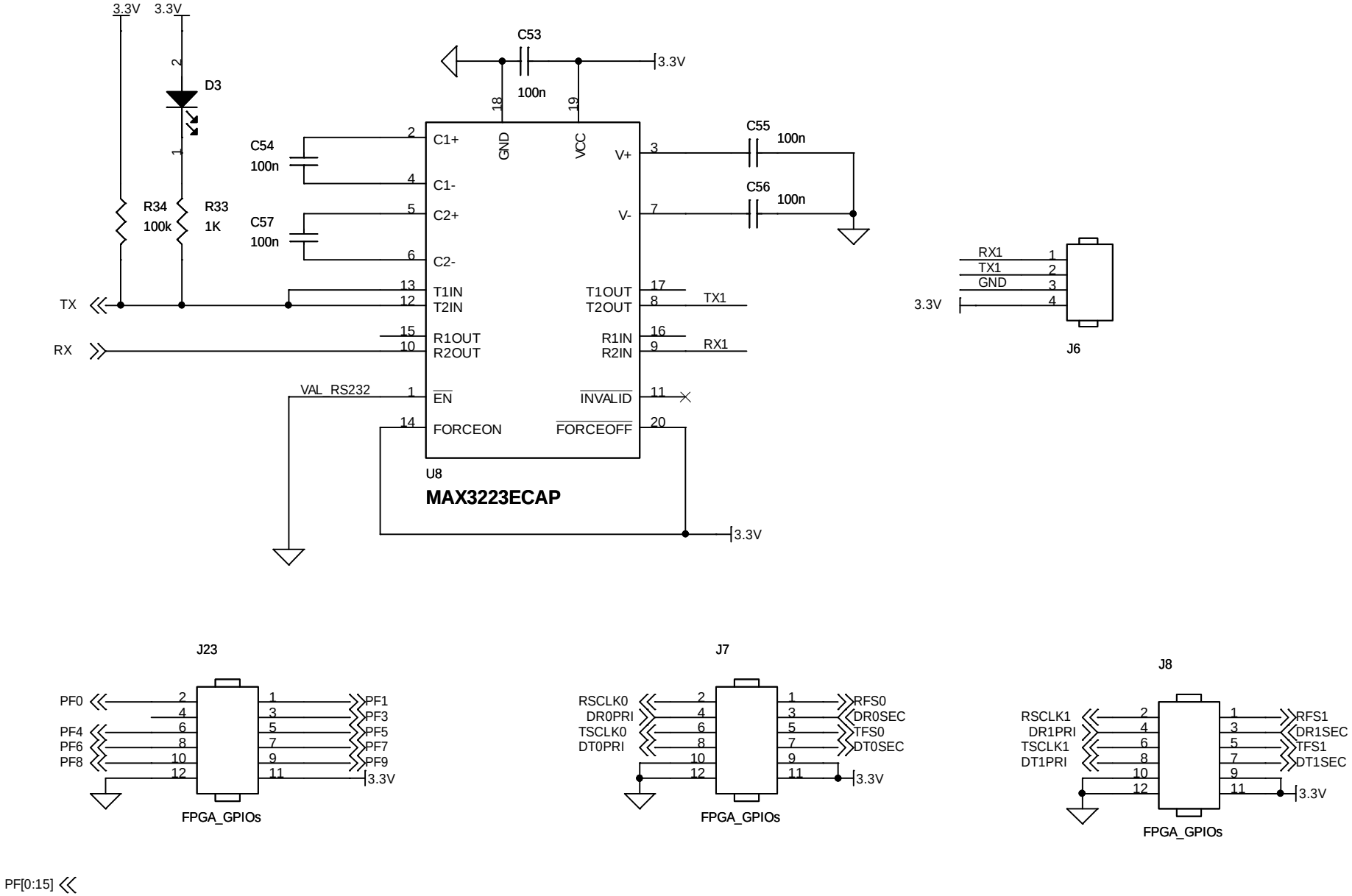


| | | |
|---|---|---|
| Title | <Title> | |
| Size A | Document Number <Doc> | Rev <RevCo |
| Date: Sunday, February 15, 2009 | Sheet 4 of 4 | |