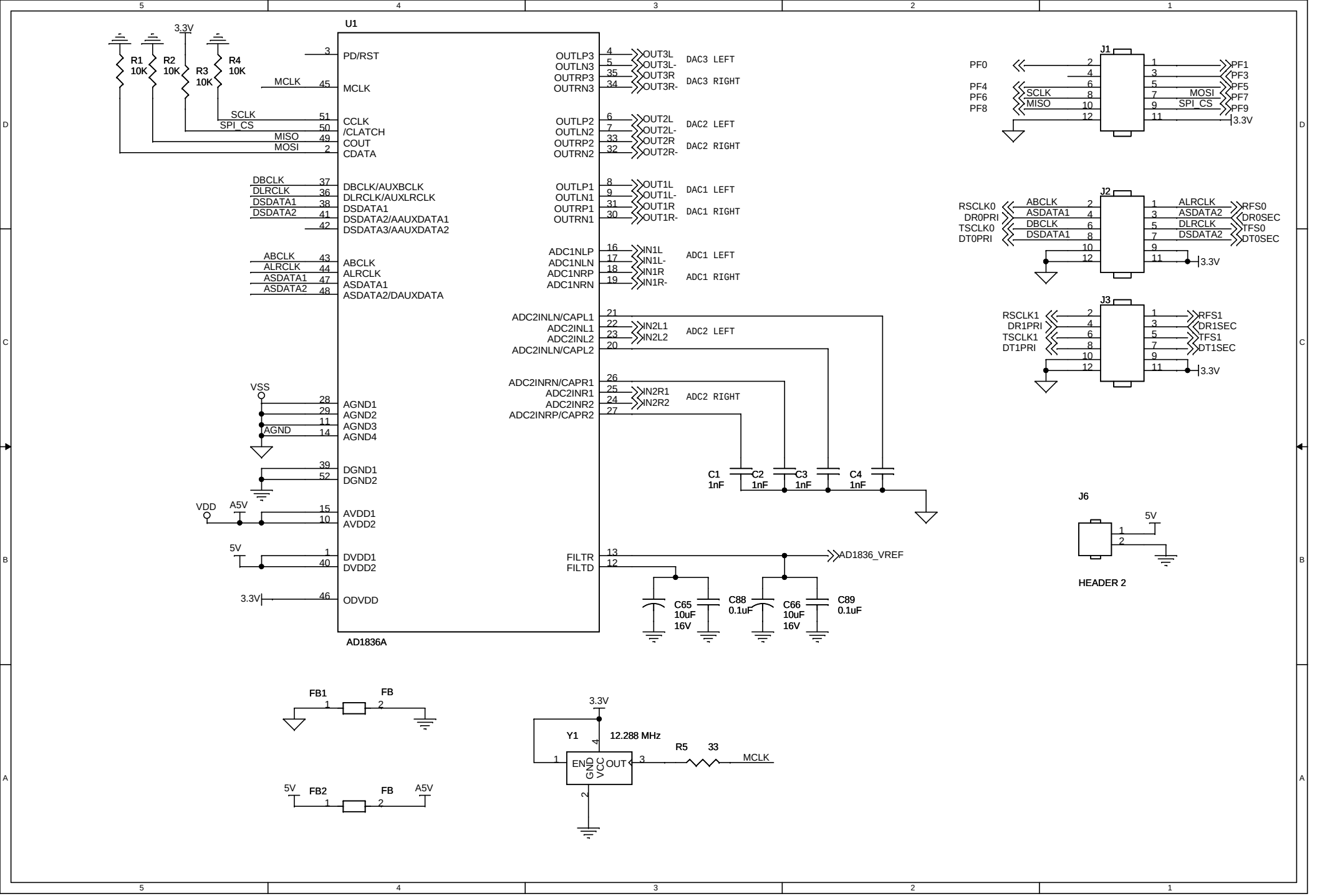
U1
AD1836A
PD/RST
MCLK
CCLK /CLATCH
COUT
CDATA
DBCLK/AUXBCLK
DLRCLK/AUXLRCLK
DSDATA1
DSDATA2/AAUXDATA1
DSDATA3/AAUXDATA2
ABCLK
ALRCLK
ASDATA1
ASDATA2/DAUXDATA
AGND1
AGND2
AGND3
AGND4
DGND1
DGND2
AVDD1
AVDD2
DVDD1
DVDD2
ODVDD
OUTLP3
OUTLN3
OUTRP3
OUTRN3
OUTLP2
OUTLN2
OUTRP2
OUTRN2
OUTLP1
OUTLN1
OUTRP1
OUTRN1
ADC1NLP
ADC1NLN
ADC1NRP
ADC1NRN
ADC2INLN/CAPL1
ADC2INL1
ADC2INL2
ADC2INLN/CAPL2
ADC2INRN/CAPR1
ADC2INR1
ADC2INR2
ADC2INRP/CAPR2
FILTR
FILTD
OUT3L
OUT3L-
OUT3R
OUT3R-
DAC3 LEFT
DAC3 RIGHT
OUT2L
OUT2L-
OUT2R
OUT2R-
DAC2 LEFT
DAC2 RIGHT
OUT1L
OUT1L-
OUT1R
OUT1R-
DAC1 LEFT
DAC1 RIGHT
IN1L
IN1L-
IN1R
IN1R-
ADC1 LEFT
ADC1 RIGHT
IN2L1
IN2L2
ADC2 LEFT
IN2R1
IN2R2
ADC2 RIGHT
AD1836_VREF
R1 10K
R2 10K
R3 10K
R4 10K
3.3V
VSS
AGND
VDD
A5V
5V
C1 1nF
C2 1nF
C3 1nF
C4 1nF
C65 10uF 16V
C88 0.1uF
C66 10uF 16V
C89 0.1uF
J1
PF0
PF4
PF6
PF8
SCLK
MISO
MOSI
SPI_CS
PF1
PF3
PF5
PF7
PF9
J2
RSCLK0
DR0PRI
TSCLK0
DT0PRI
ABCLK
ASDATA1
DBCLK
DSDATA1
ALRCLK
ASDATA2
DLRCLK
DSDATA2
RFS0
DR0SEC
TFS0
DT0SEC
J3
RSCLK1
DR1PRI
TSCLK1
DT1PRI
RFS1
DR1SEC
TFS1
DT1SEC
J6
HEADER 2
FB1
FB
FB2
Y1
12.288 MHz
EN
GND
VCC
OUT
R5
33
MCLK

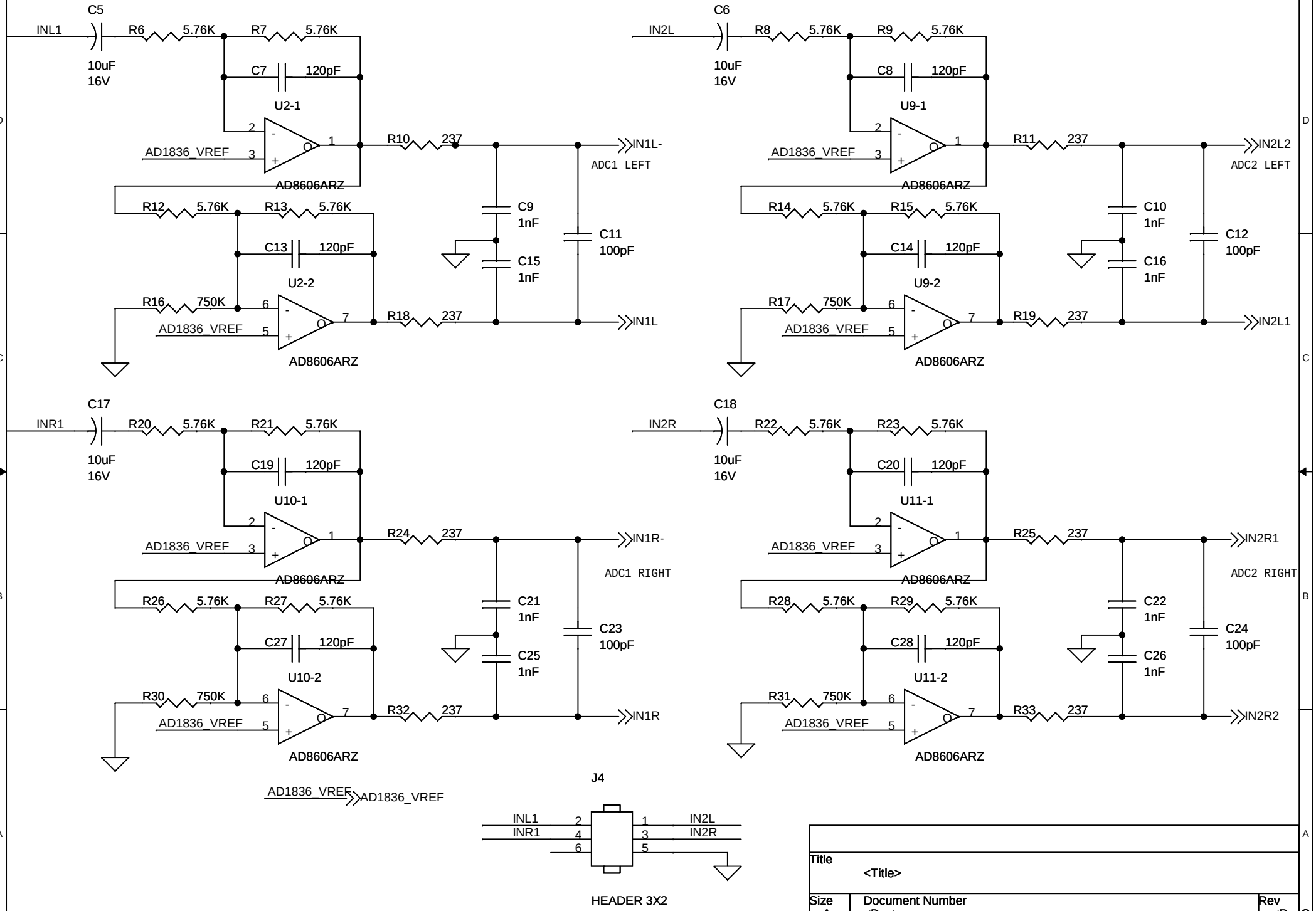

Title	<Title>	
Size A	Document Number <Doc>	Rev <RevCo
Date: Monday, April 20, 2009	Sheet 2 of 3	

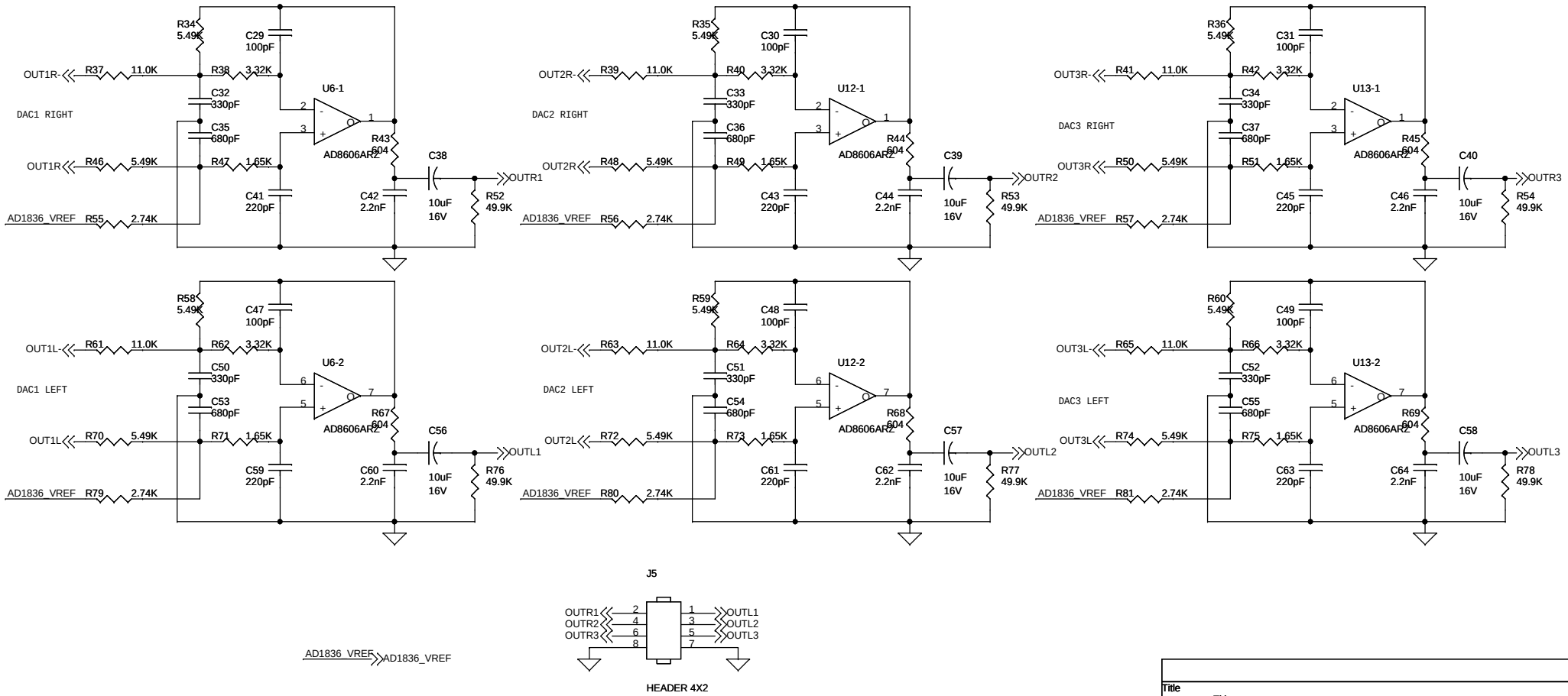

Title	<Title>	
Size Custom	Document Number <Doc>	Rev <RevCode>
Date: Monday, April 20, 2009	Sheet 3 of 3	