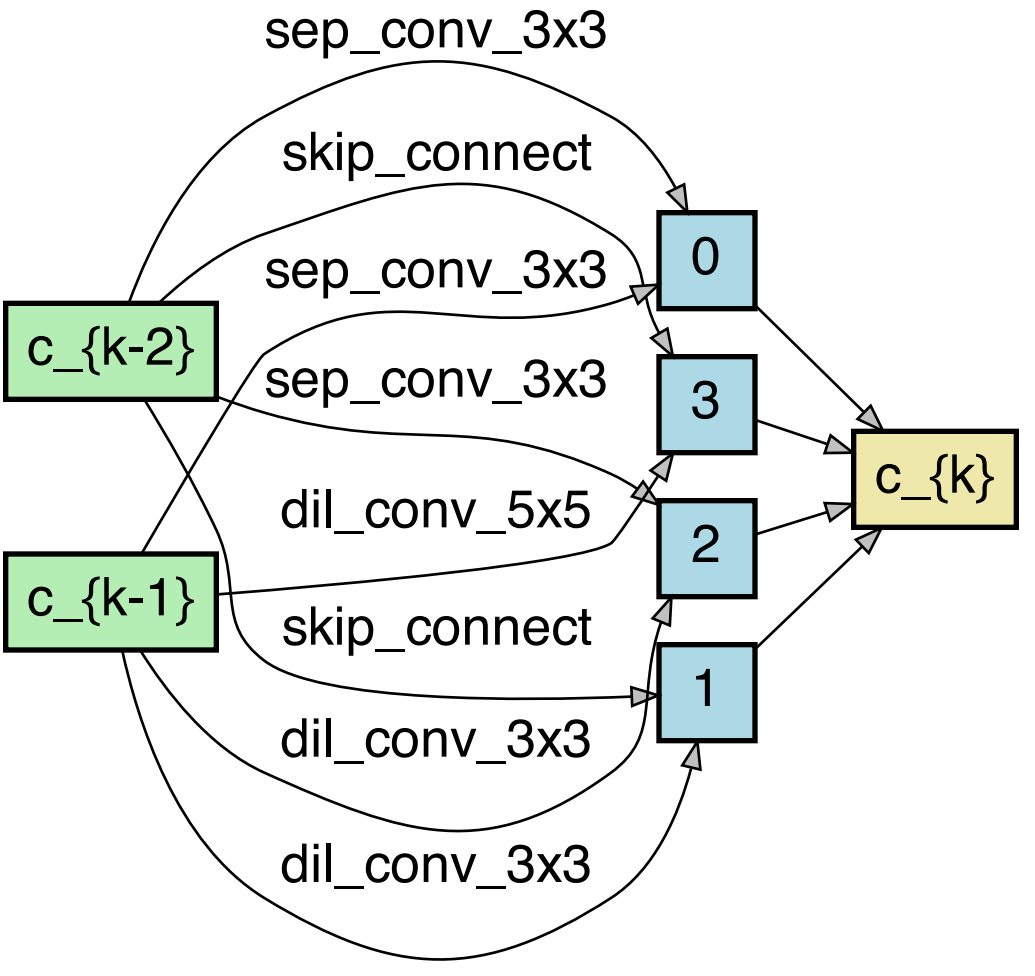
sep_conv_3x3
skip_connect
sep_conv_3x3
sep_conv_3x3
dil_conv_5x5
skip_connect
dil_conv_3x3
dil_conv_3x3
c_{k-2}
c_{k-1}
0
3
2
1
c_{k}