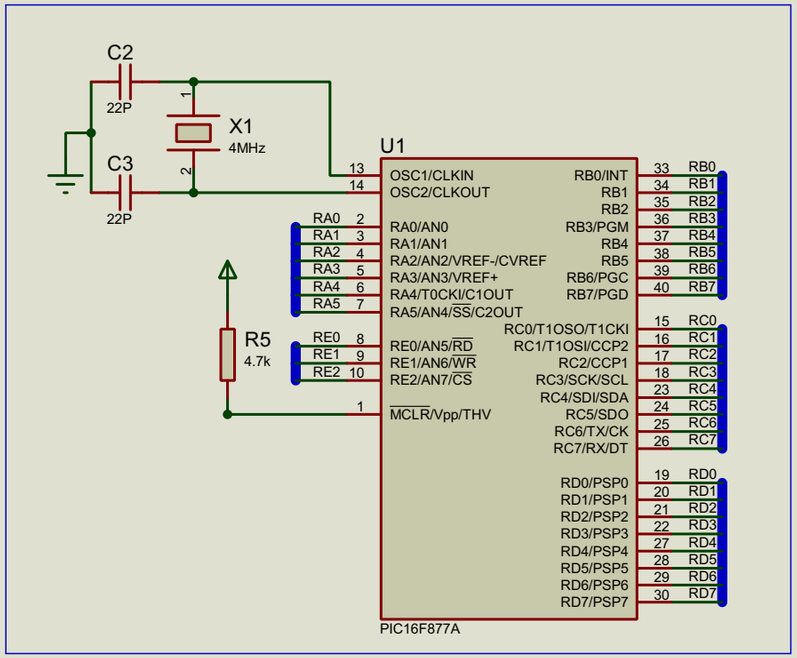
C2
22P
C3
22P
X1
4MHz
U1
OSC1/CLKIN
OSC2/CLKOUT
RA0/AN0
RA1/AN1
RA2/AN2/VREF-/CVREF
RA3/AN3/VREF+
RA4/T0CKI/C1OUT
RA5/AN4/SS/C2OUT
RE0/AN5/RD
RE1/AN6/WR
RE2/AN7/CS
MCLR/Vpp/THV
RB0/INT
RB1
RB2
RB3/PGM
RB4
RB5
RB6/PGC
RB7/PGD
RC0/T1OSO/T1CKI
RC1/T1OSI/CCP2
RC2/CCP1
RC3/SCK/SCL
RC4/SDI/SDA
RC5/SDO
RC6/TX/CK
RC7/RX/DT
RD0/PSP0
RD1/PSP1
RD2/PSP2
RD3/PSP3
RD4/PSP4
RD5/PSP5
RD6/PSP6
RD7/PSP7
R5
4.7k
PIC16F877A

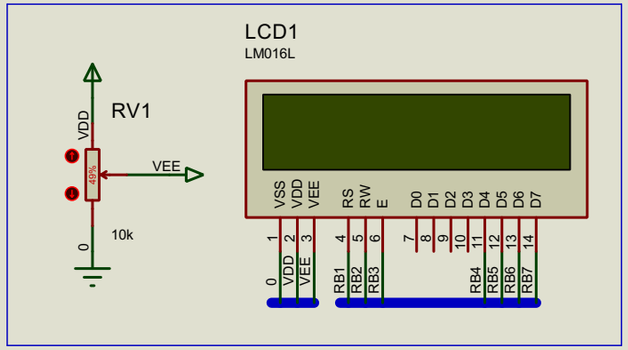
LCD1
LM016L
RV1
VDD
VEE
10k
VSS
VDD
VEE
RS
RW
E
D0
D1
D2
D3
D4
D5
D6
D7
RB1
RB2
RB3
RB4
RB5
RB6
RB7

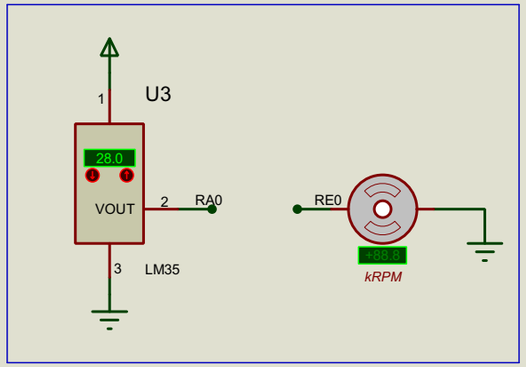
U3
28.0
VOUT
RA0
LM35
RE0
+88.8
kRPM

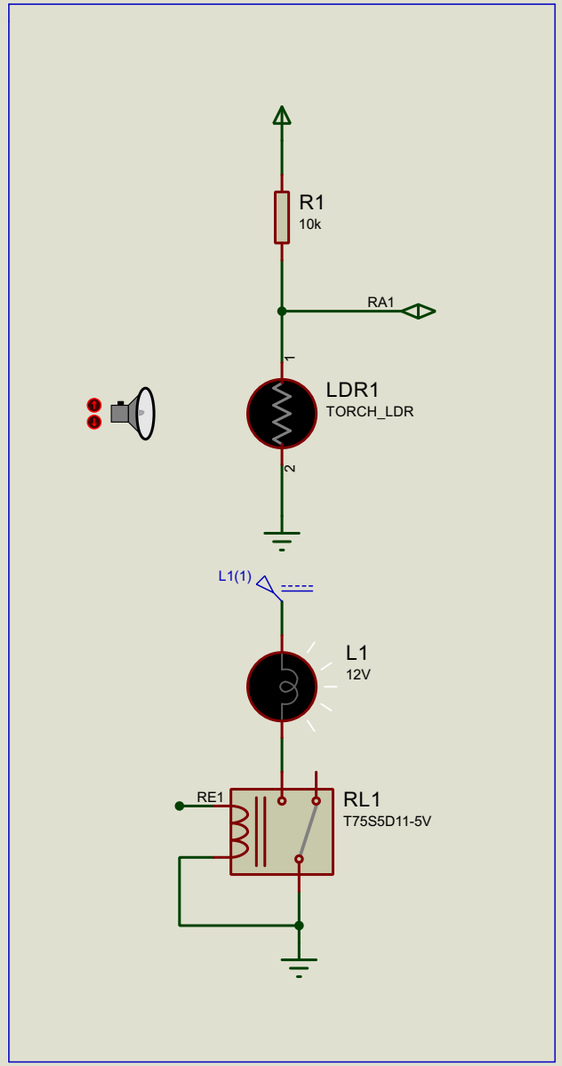
R1
10k
RA1
LDR1
TORCH_LDR
L1(1)
L1
12V
RE1
RL1
T75S5D11-5V

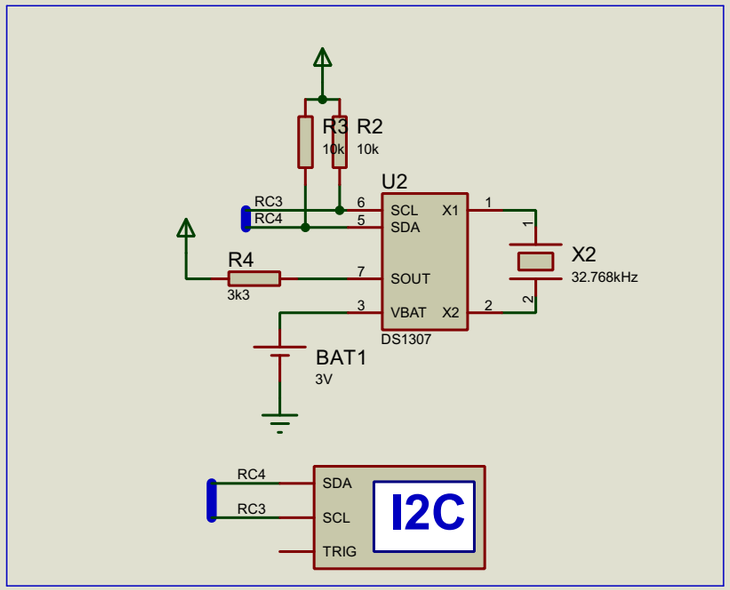
R3
10k
R2
10k
U2
RC3
RC4
SCL
SDA
X1
SOUT
VBAT
X2
DS1307
R4
3k3
X2
32.768kHz
BAT1
3V
RC4
RC3
SDA
SCL
TRIG
I2C