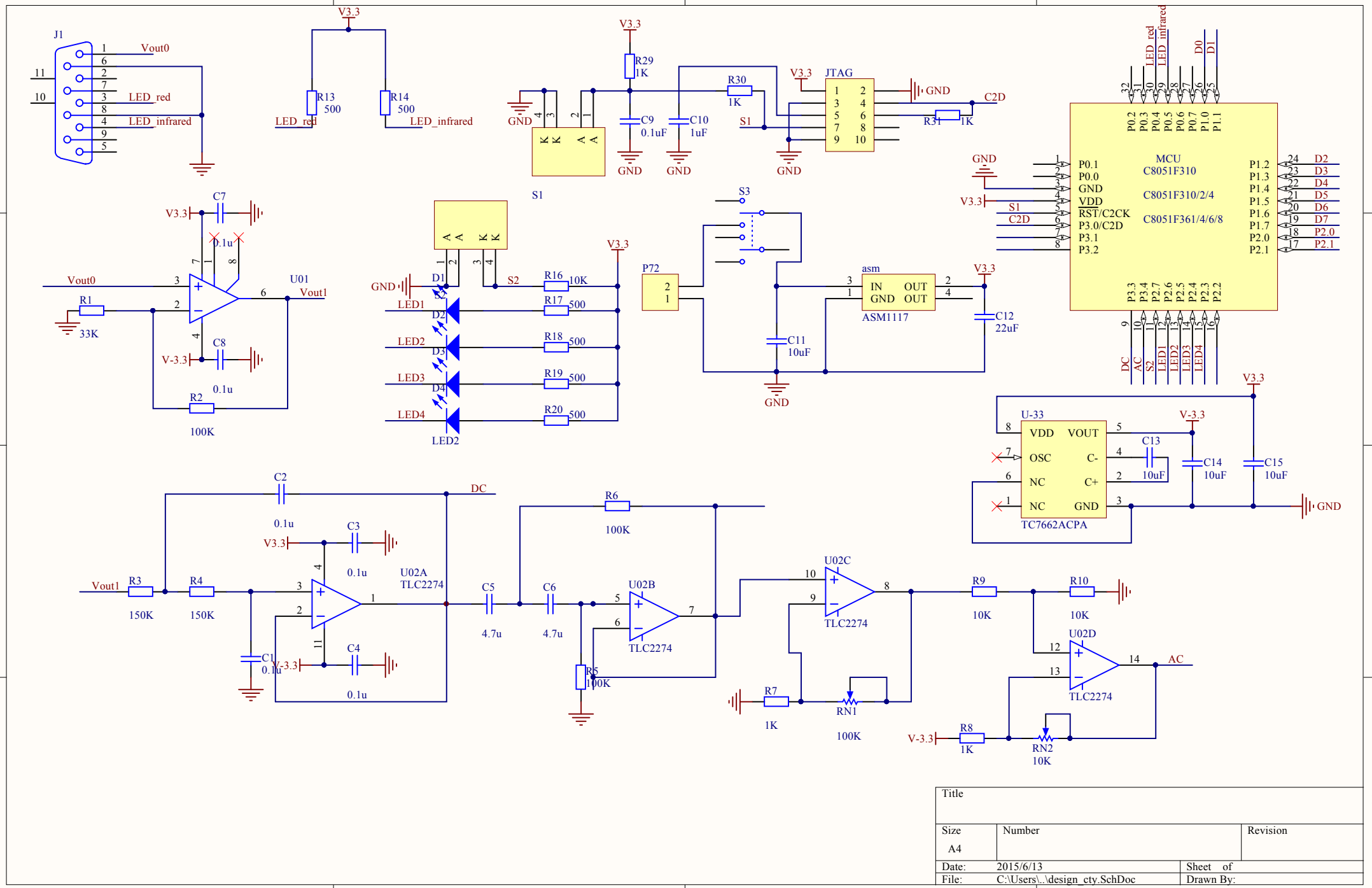

Title		
Size A4	Number	Revision
Date: 2015/6/13	Sheet of	
File: C:\Users\..\design_cty.SchDoc	Drawn By:	

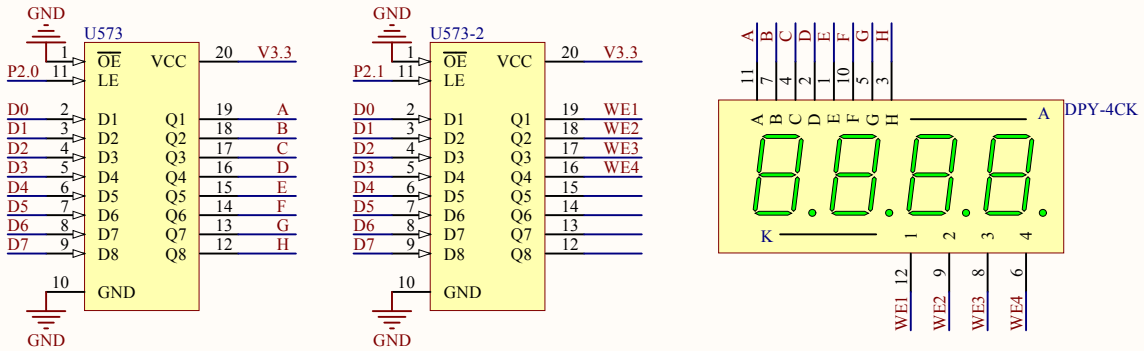

Title		
Size A4	Number	Revision
Date: 2015/6/13		Sheet of
File: C:\Users\..\Sheet2.SchDoc		Drawn By:

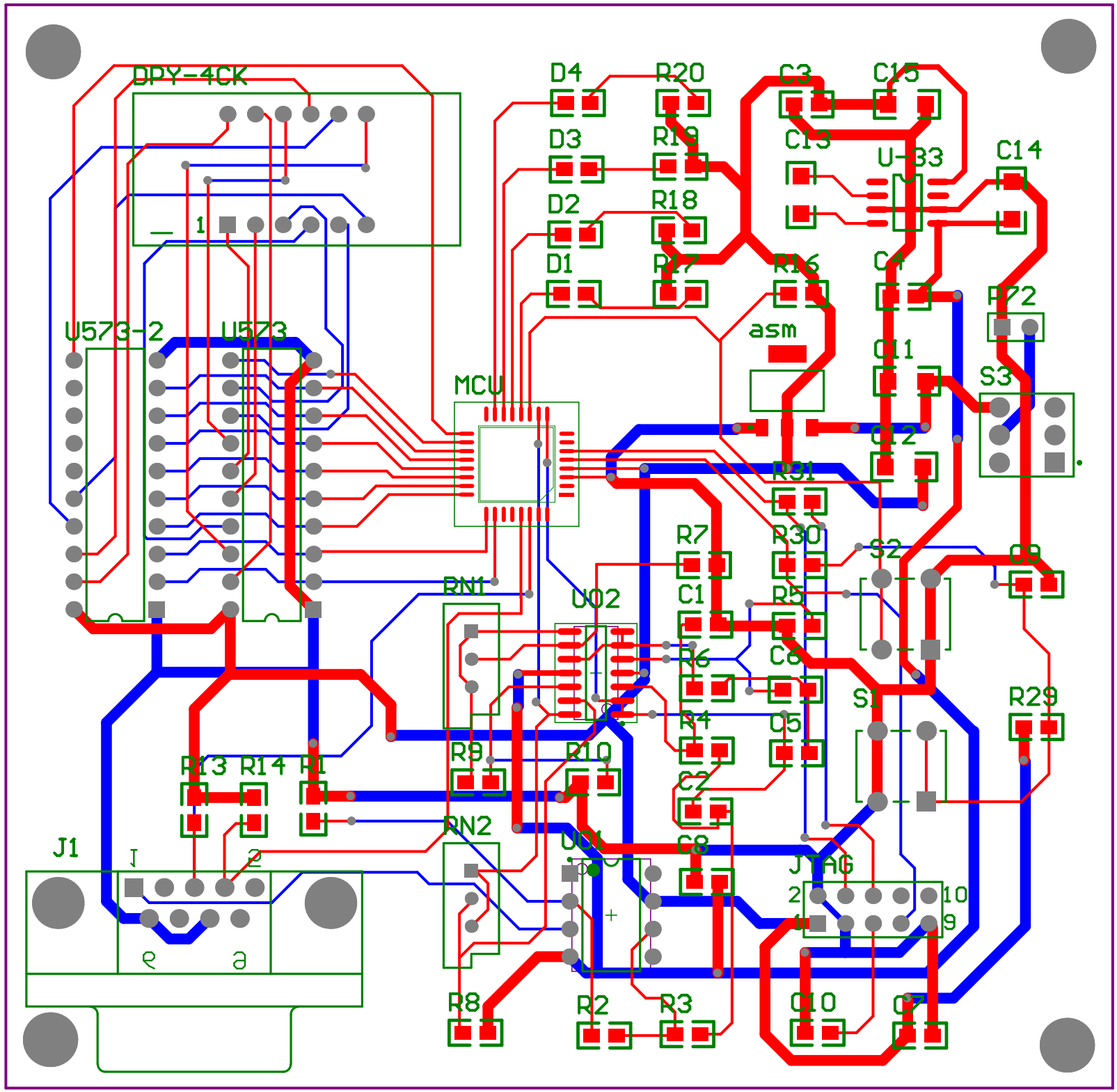
DPY-4CK
D4
R20
C3
C15
D3
R19
C13
U-33
C14
D2
R18
D1
R17
R16
C4
P72
U573-2
U573
asm
C11
S3
MCU
C12
R31
R7
R30
S2
C9
RN1
U02
C1
R5
R6
C6
S1
R29
R4
C5
R9
R10
R13
R14
R1
C2
RN2
U01
C8
J1
JTAG
R8
R2
R3
C10
C7