174

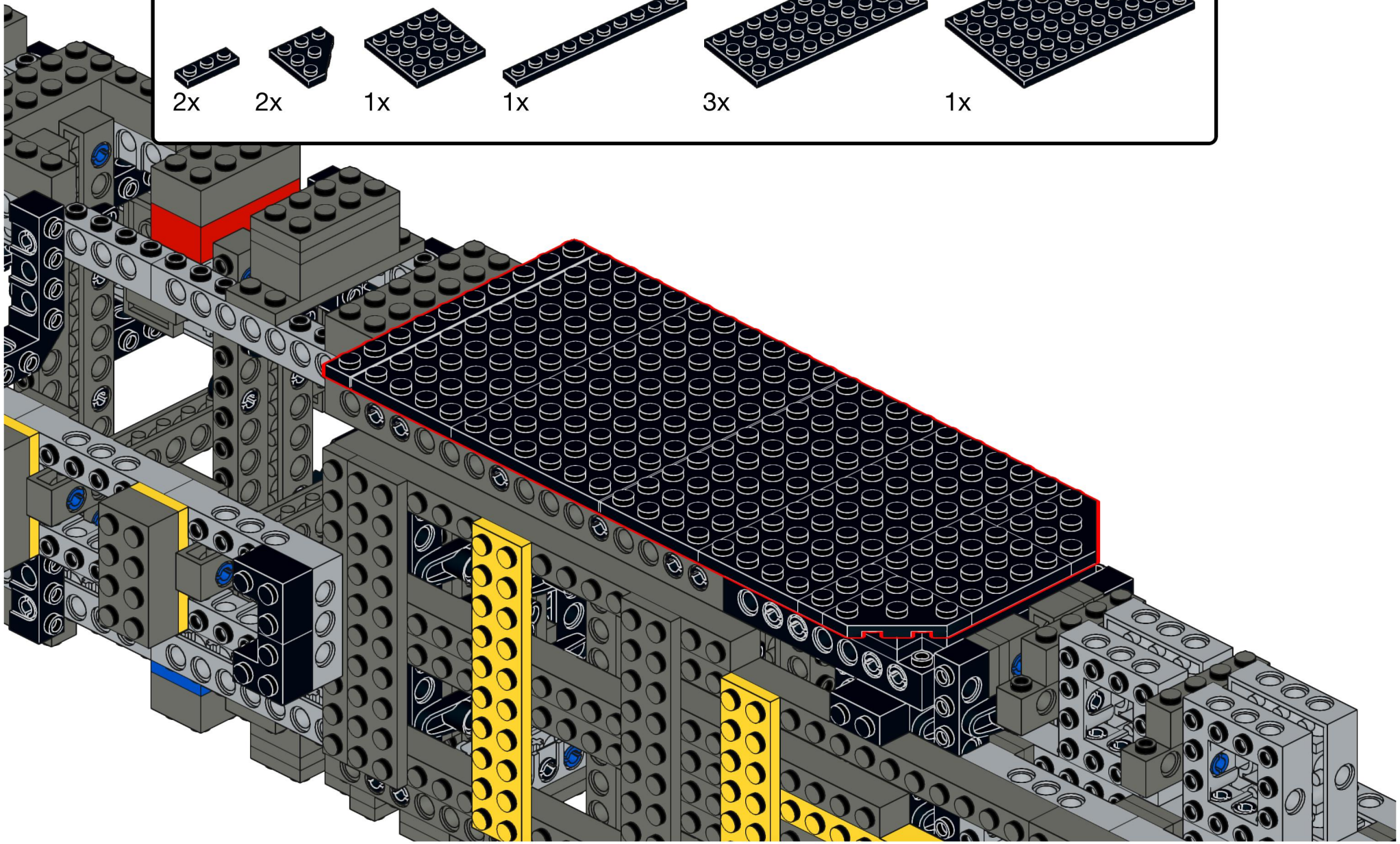

Designed by Michael Gertsch

175

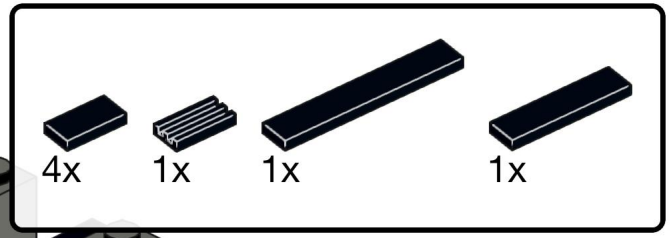

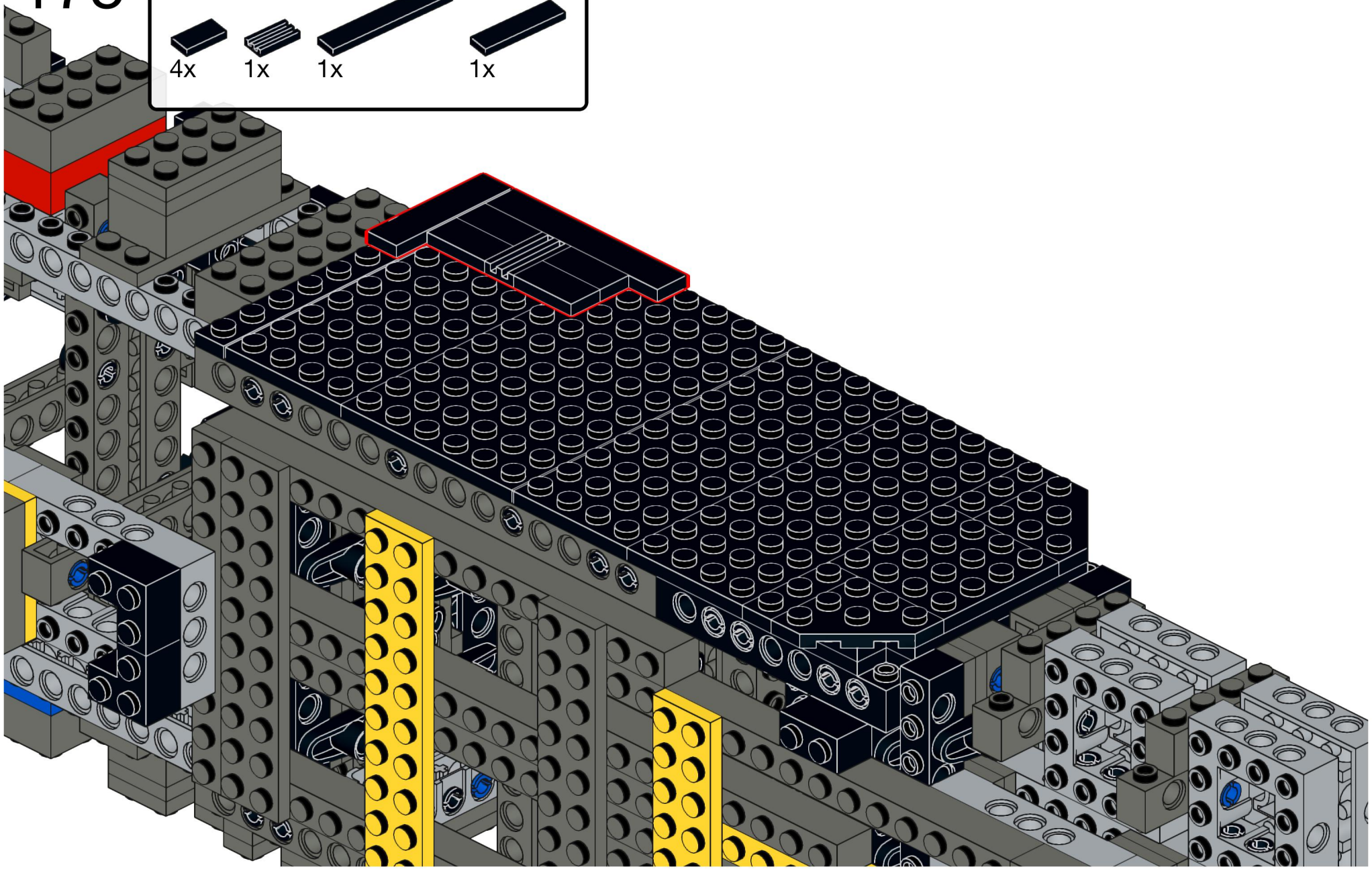

Designed by Michael Gertsch

176

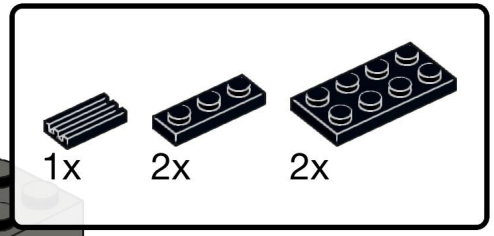

Designed by Michael Gertsch

177

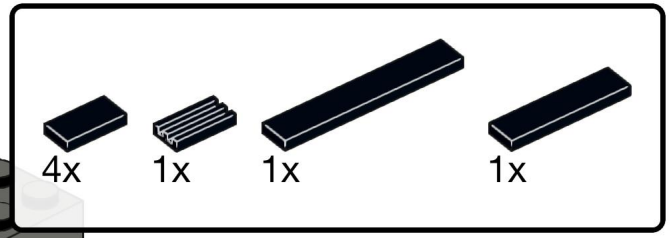

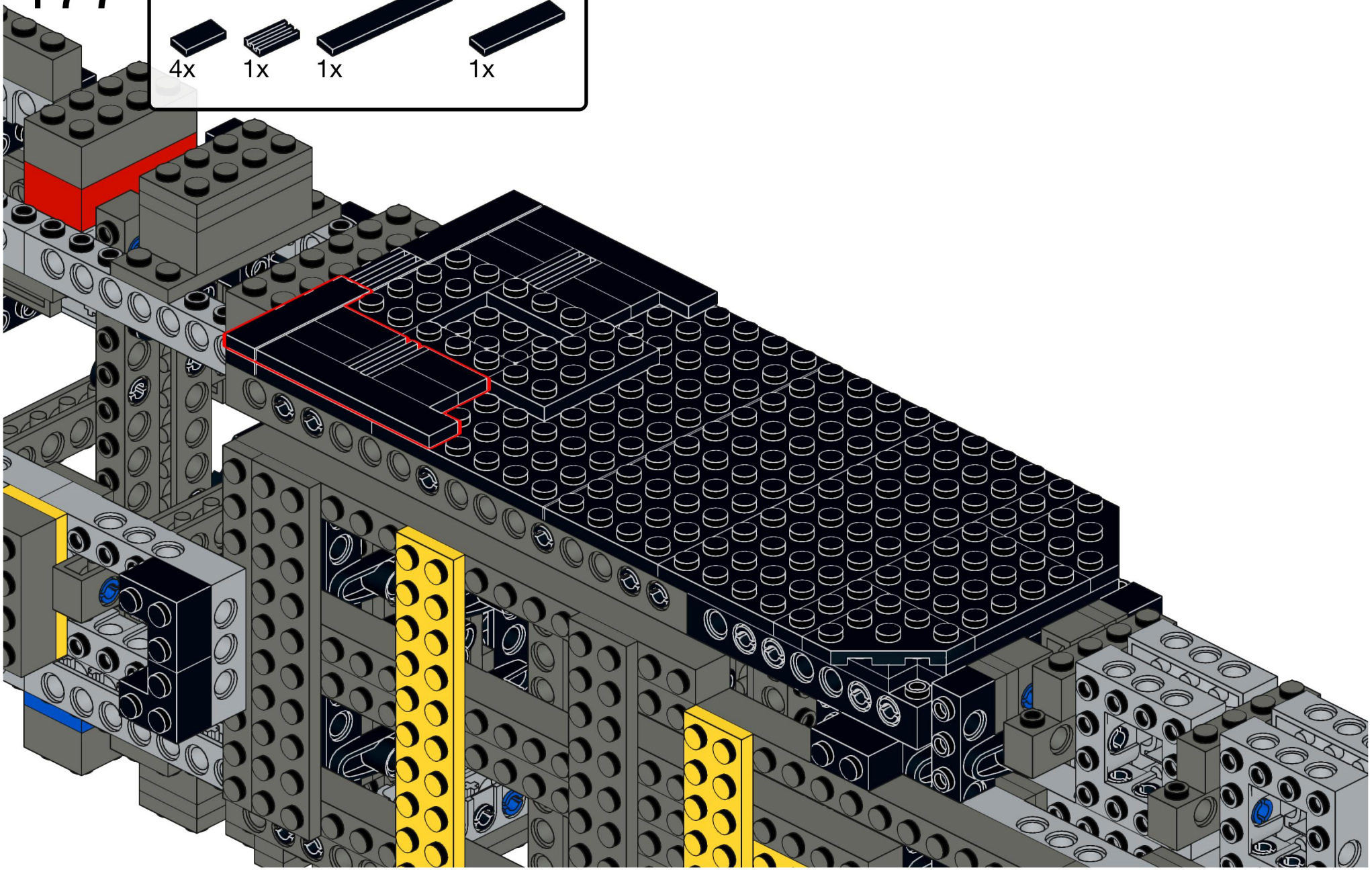

Designed by Michael Gertsch

178

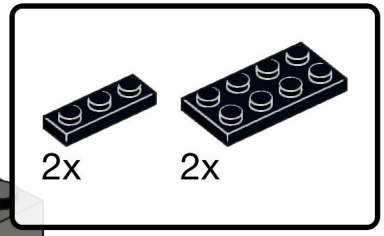

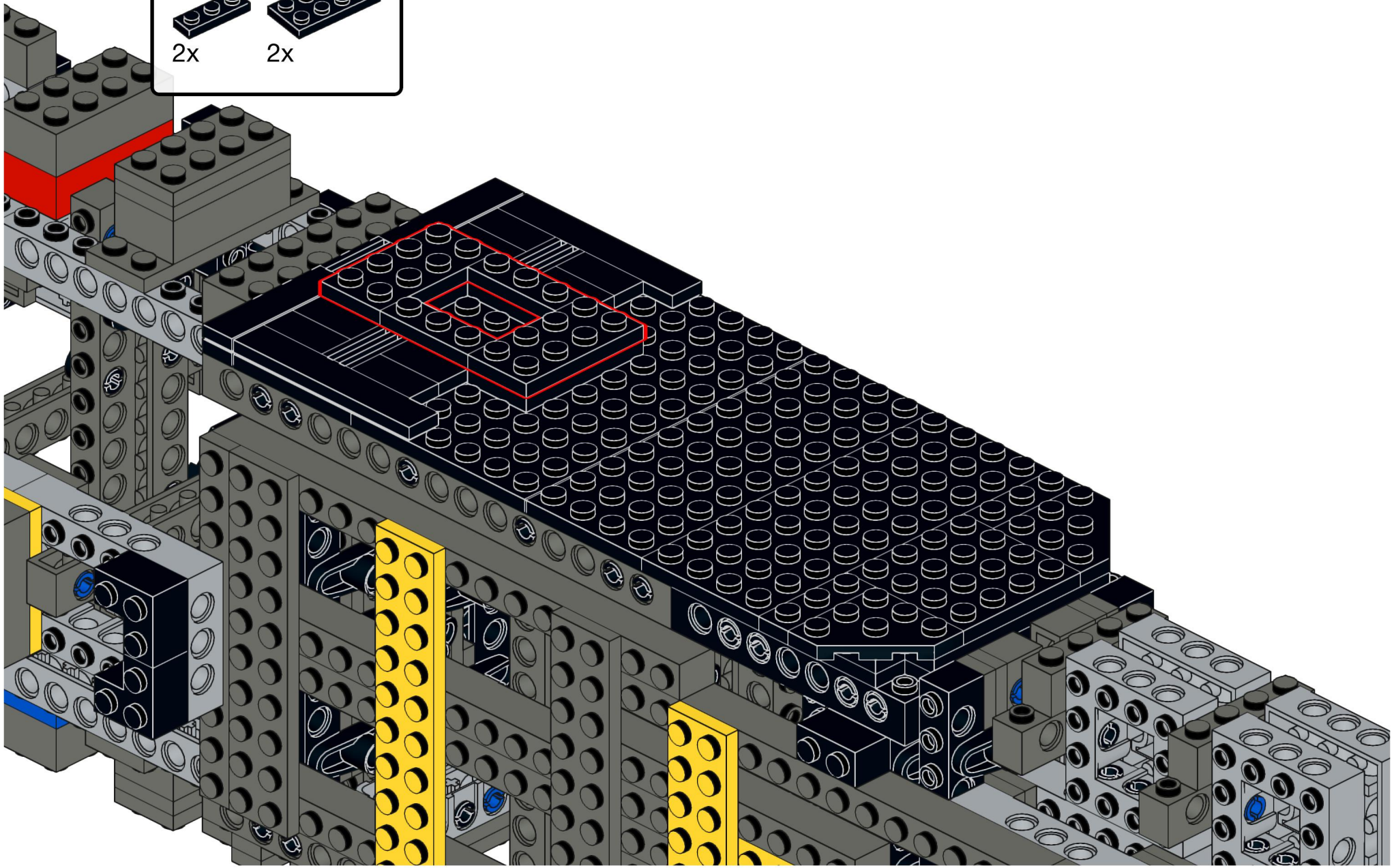

Designed by Michael Gertsch

179

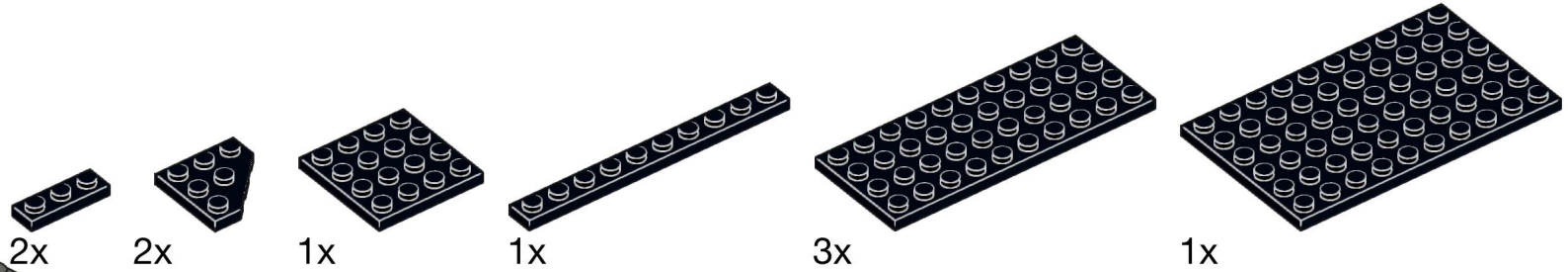

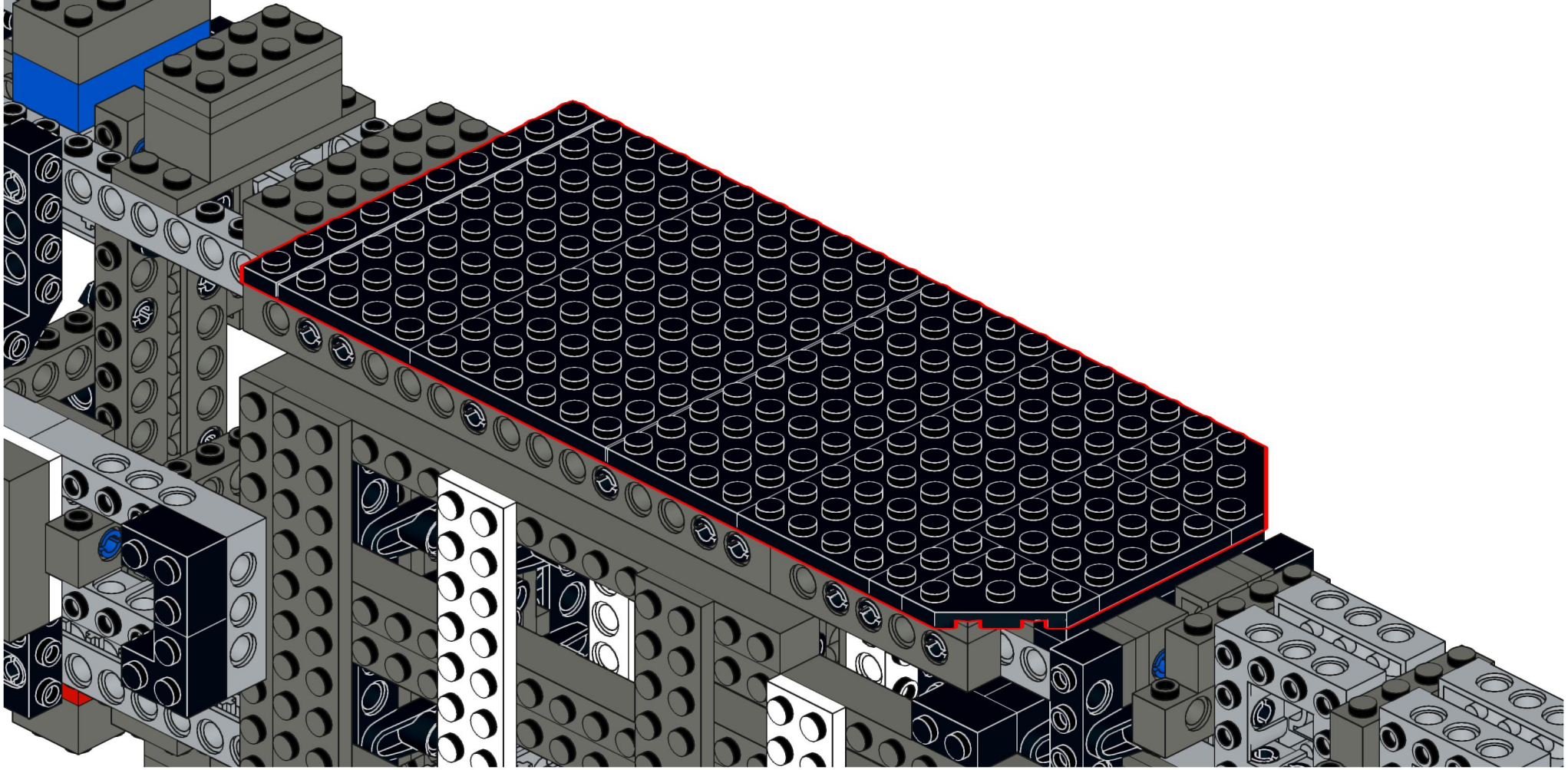

Designed by Michael Gertsch

180

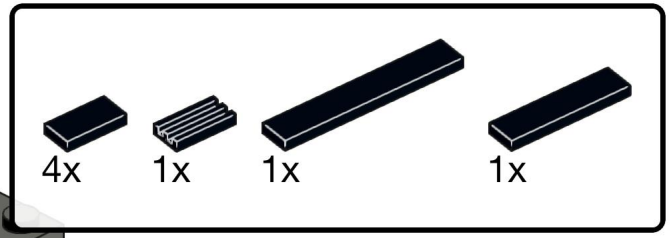

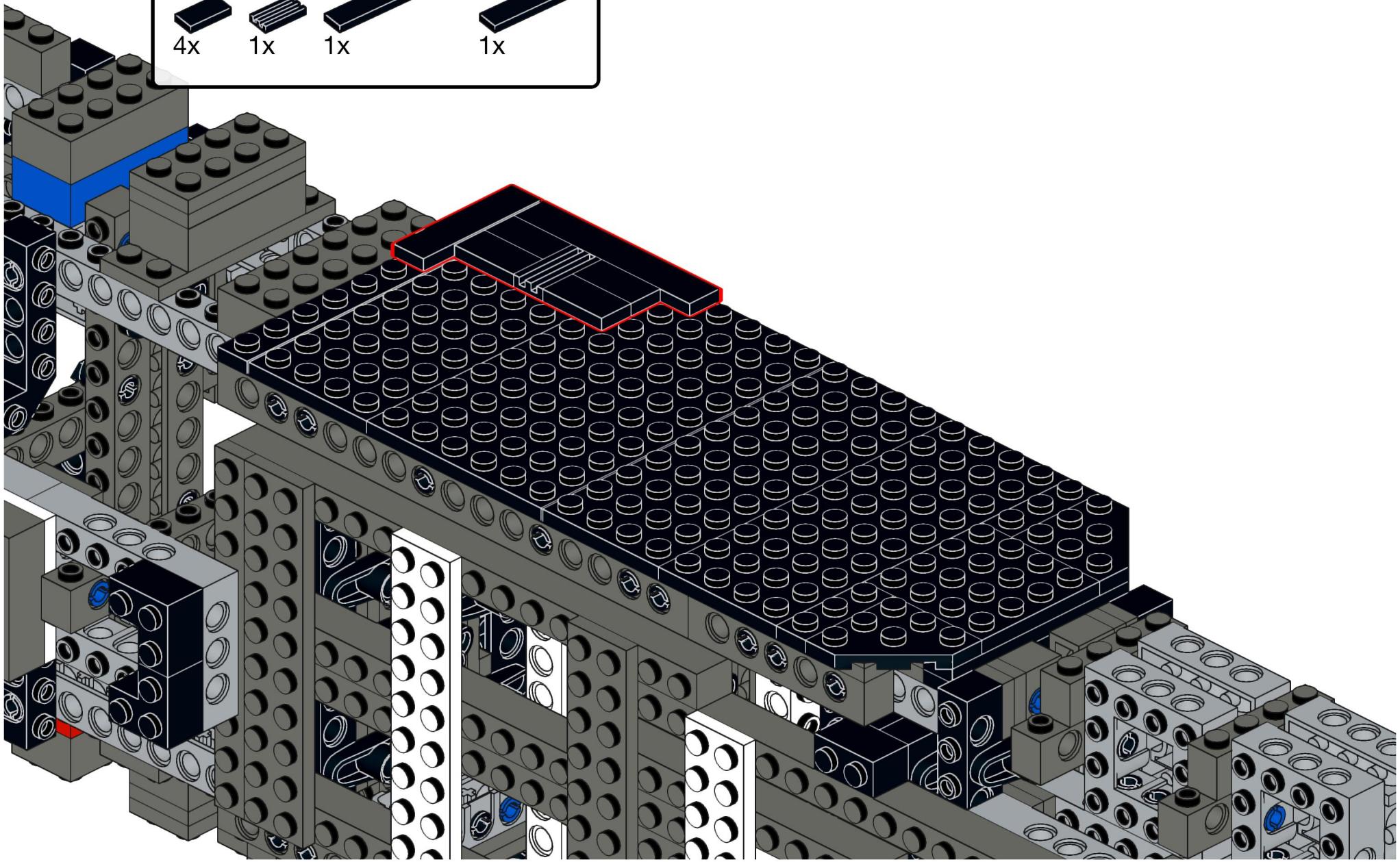

Designed by Michael Gertsch

181

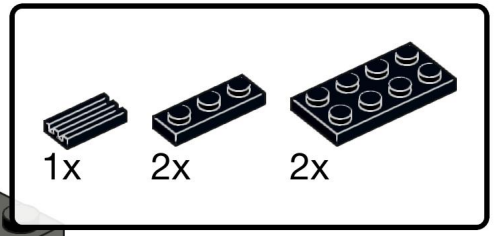

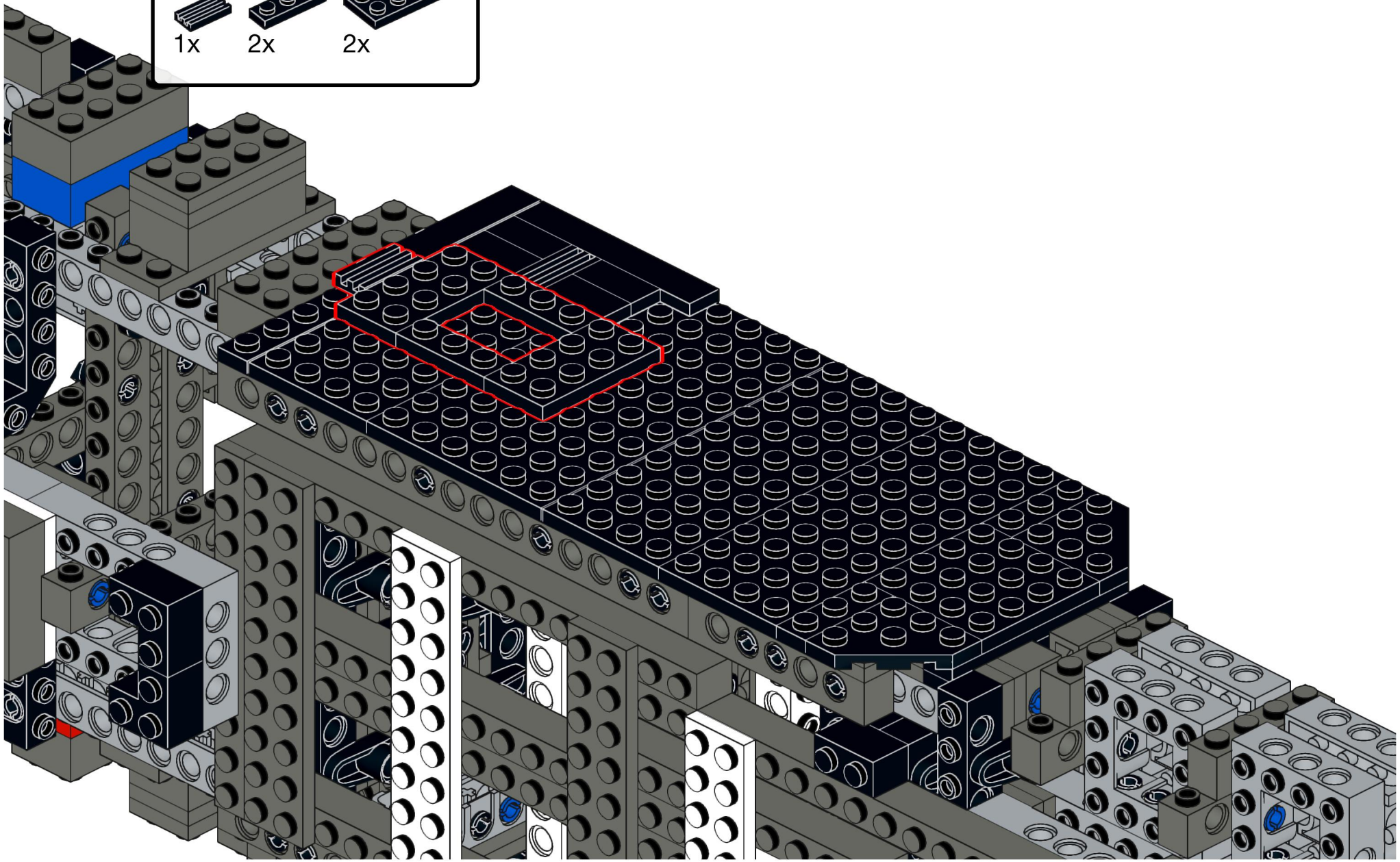

Designed by Michael Gertsch

182

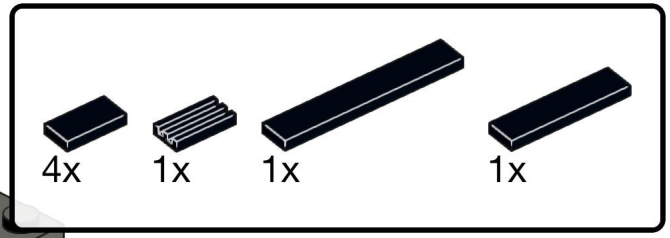

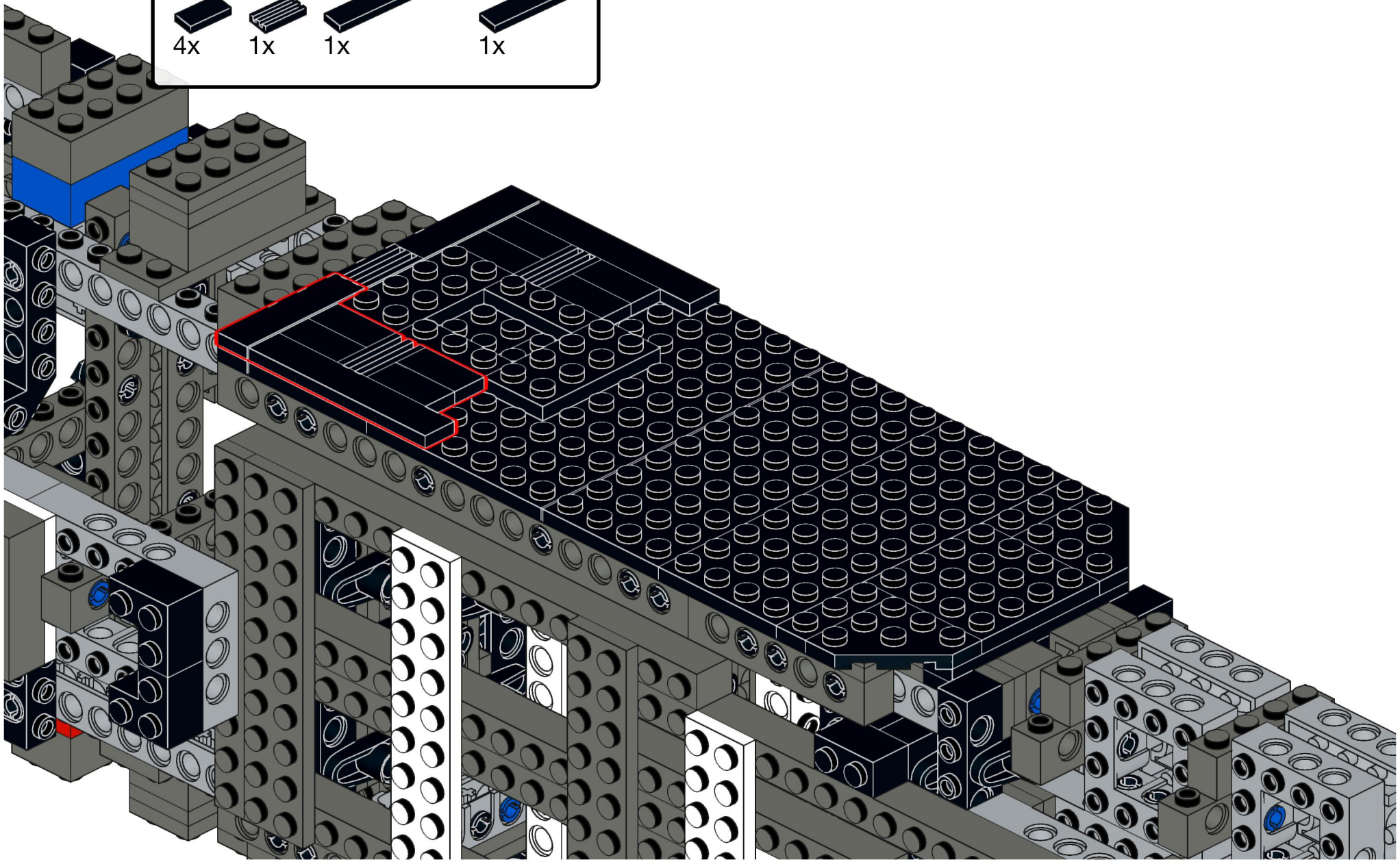

Designed by Michael Gertsch

183

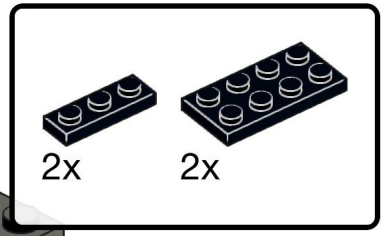

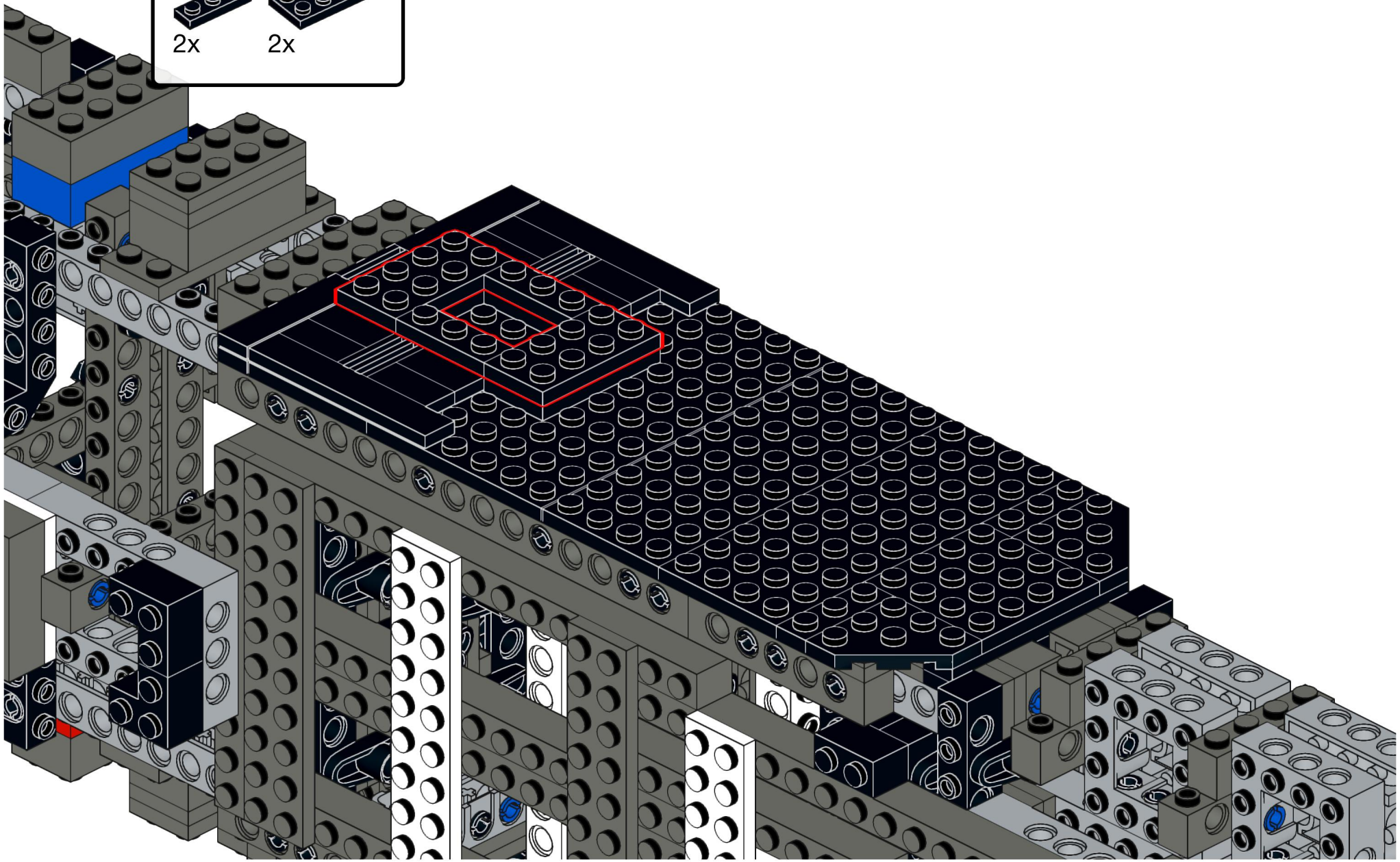

Designed by Michael Gertsch

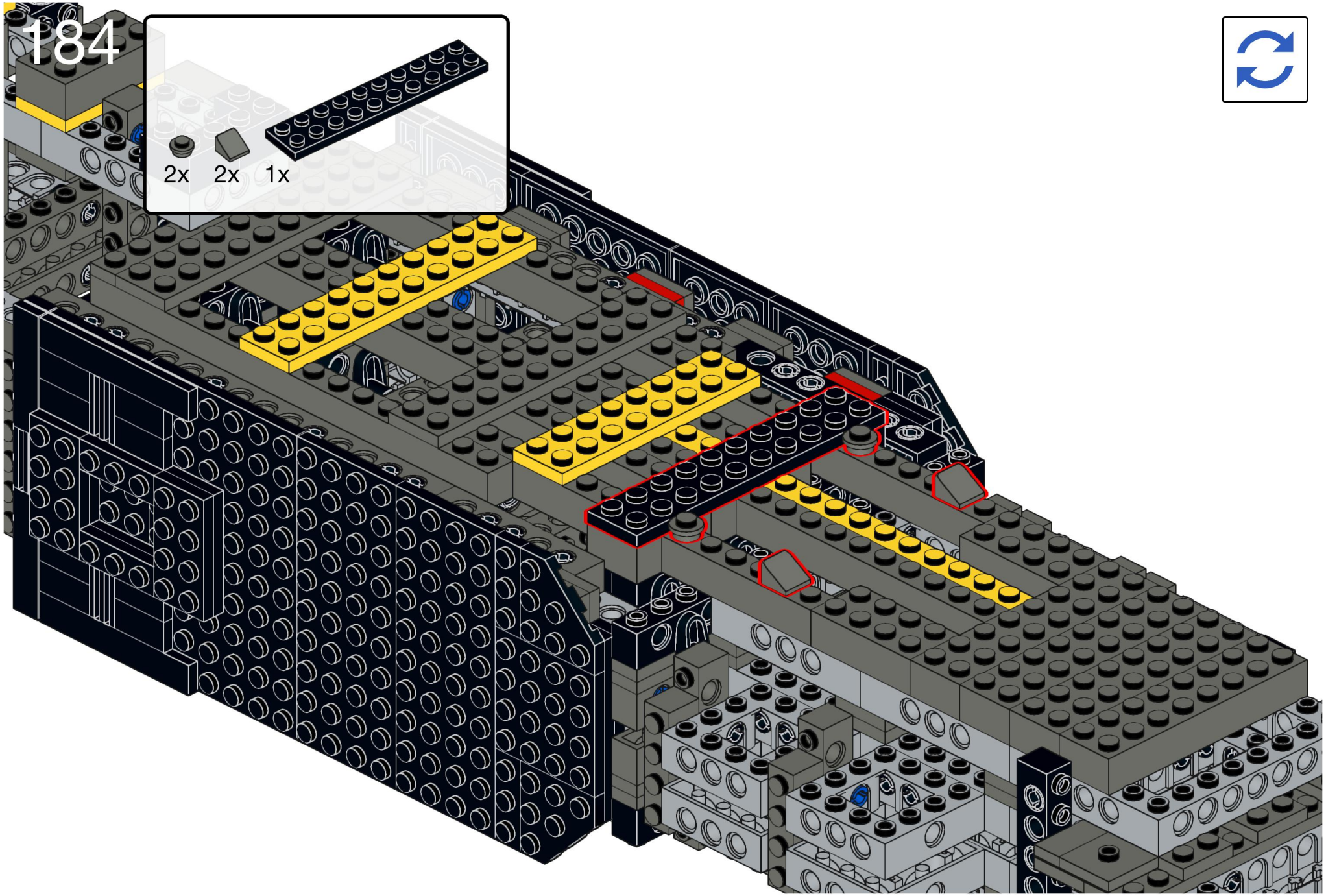

Designed by Michael Gertsch

185

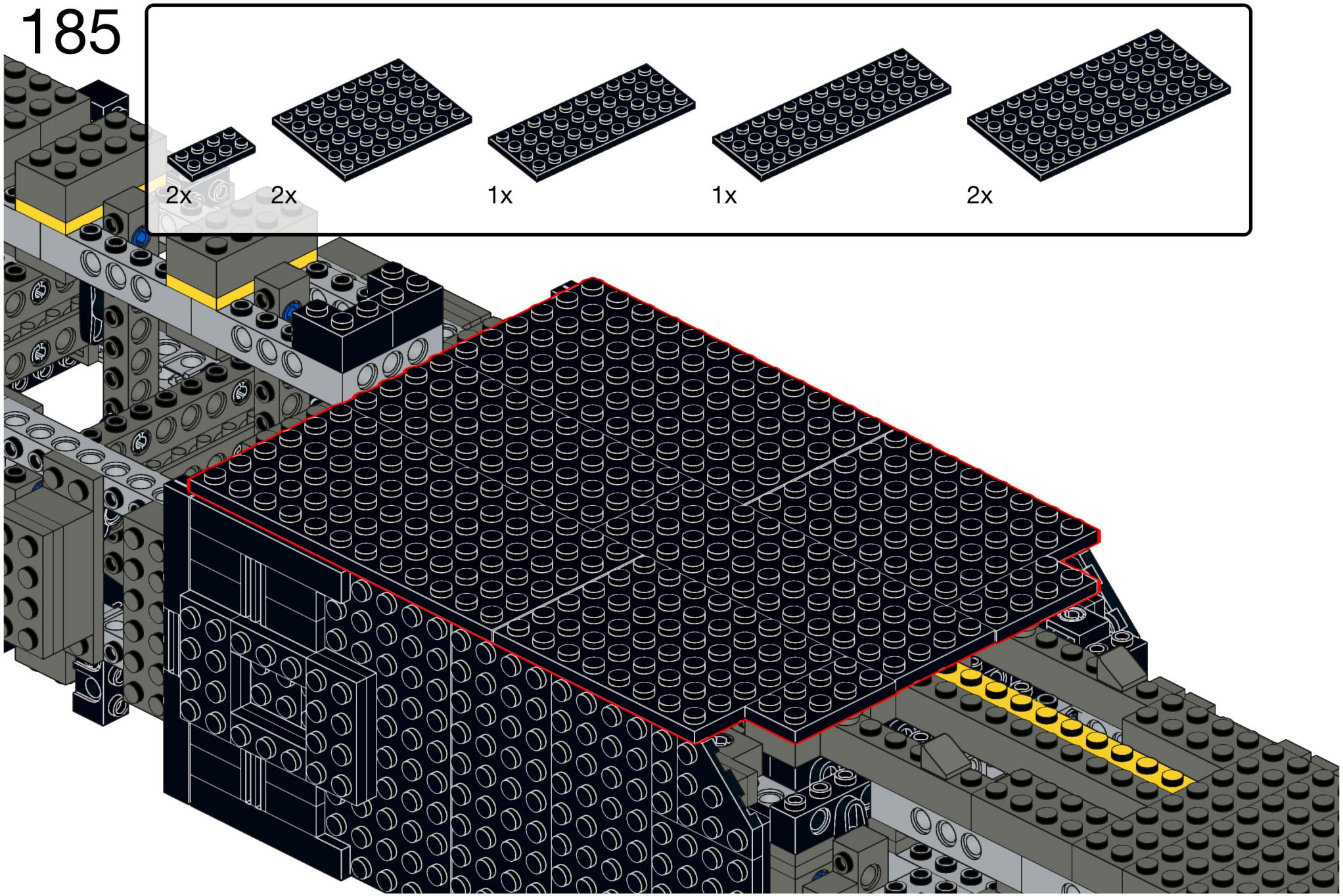

Designed by Michael Gertsch

186

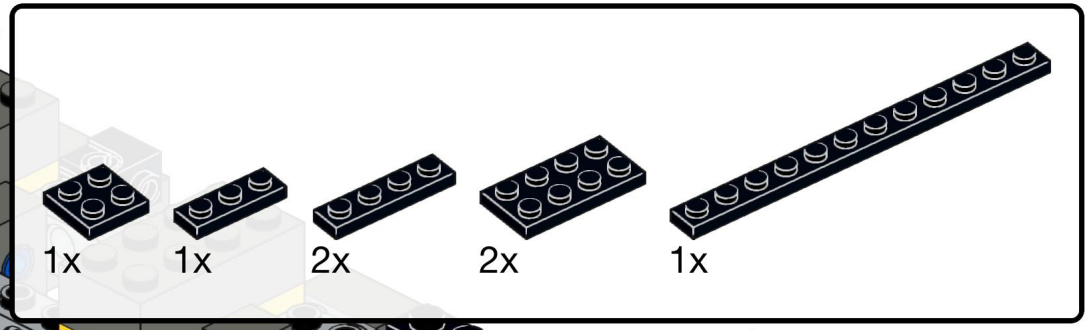

Designed by Michael Gertsch

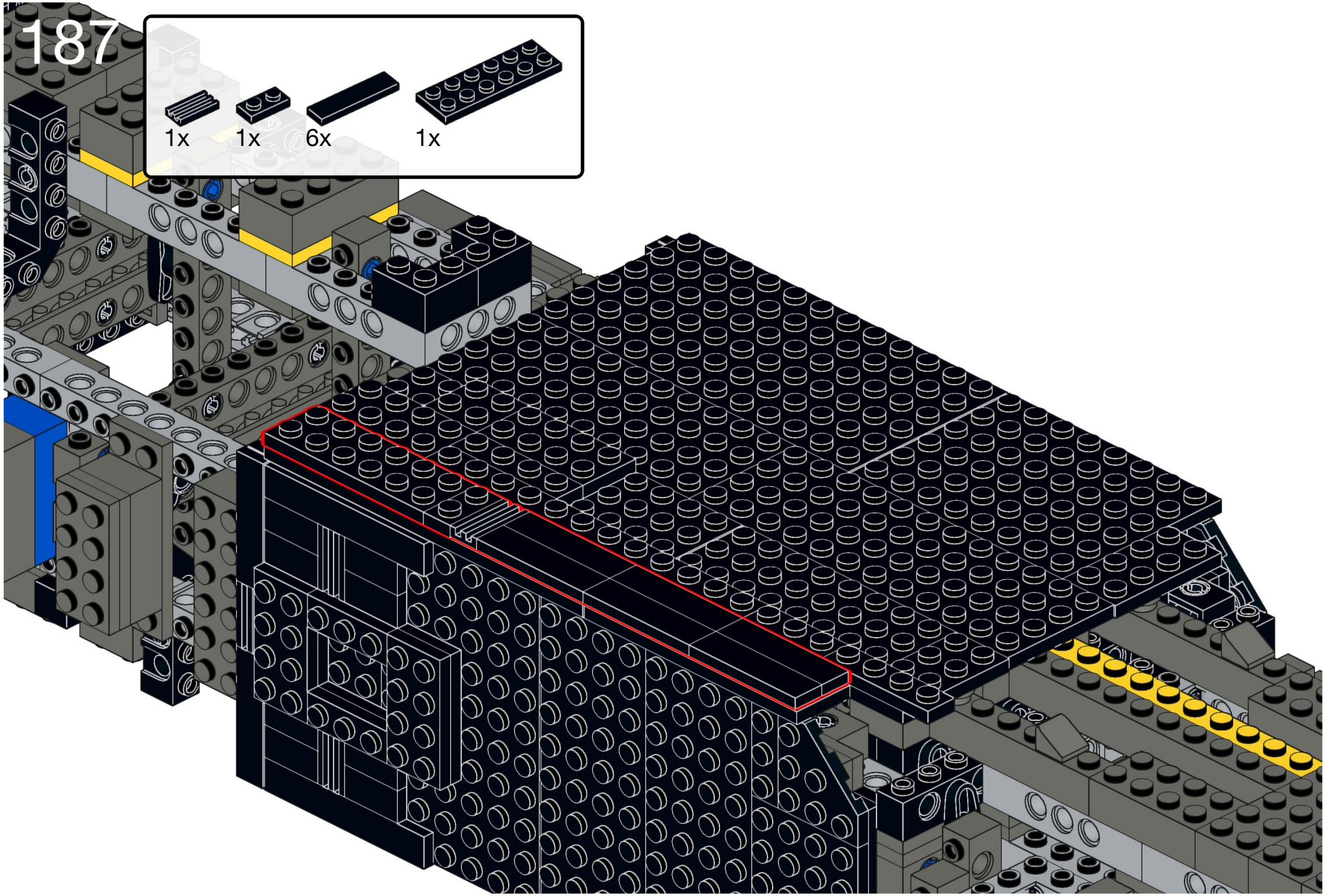

Designed by Michael Gertsch

188

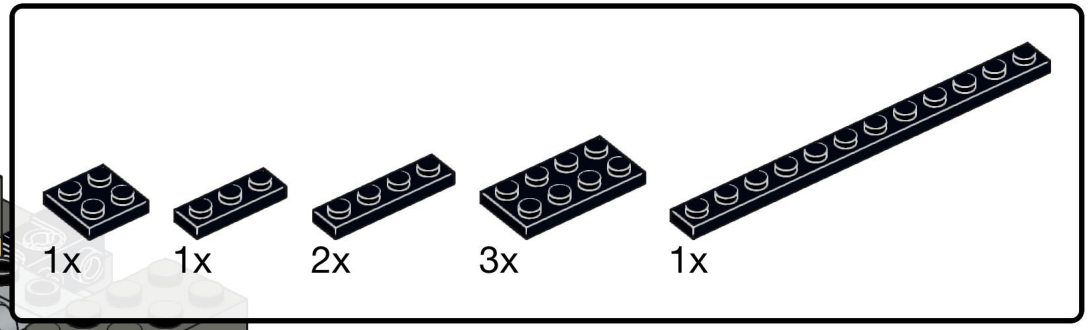

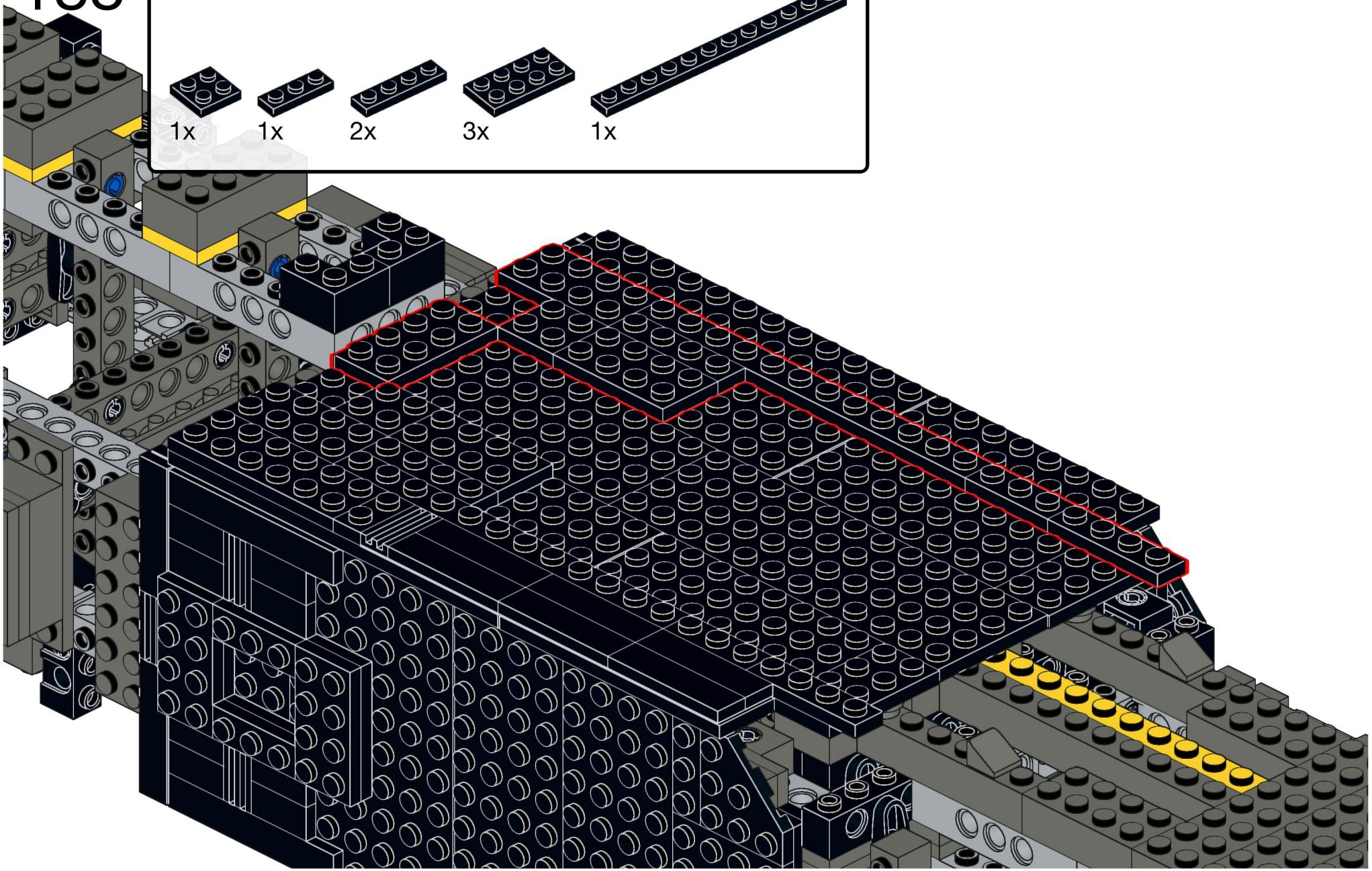

Designed by Michael Gertsch

189

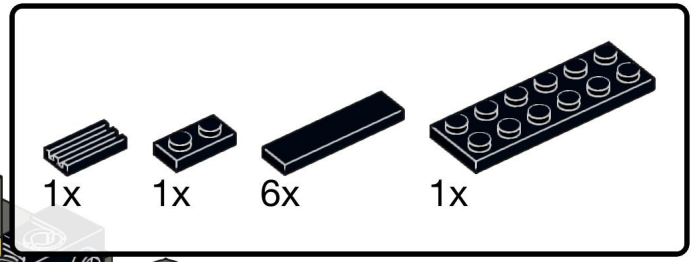

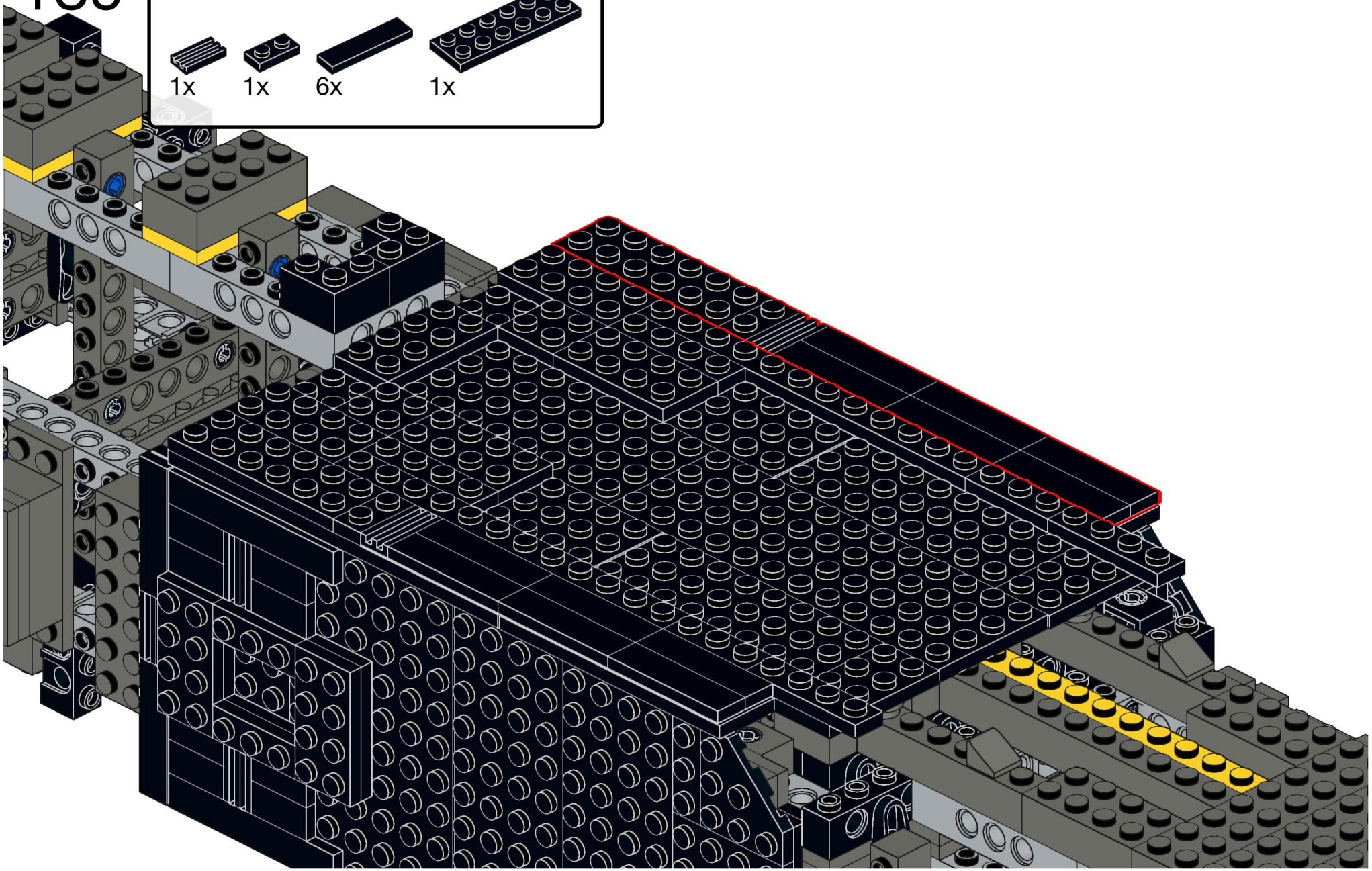

Designed by Michael Gertsch

190

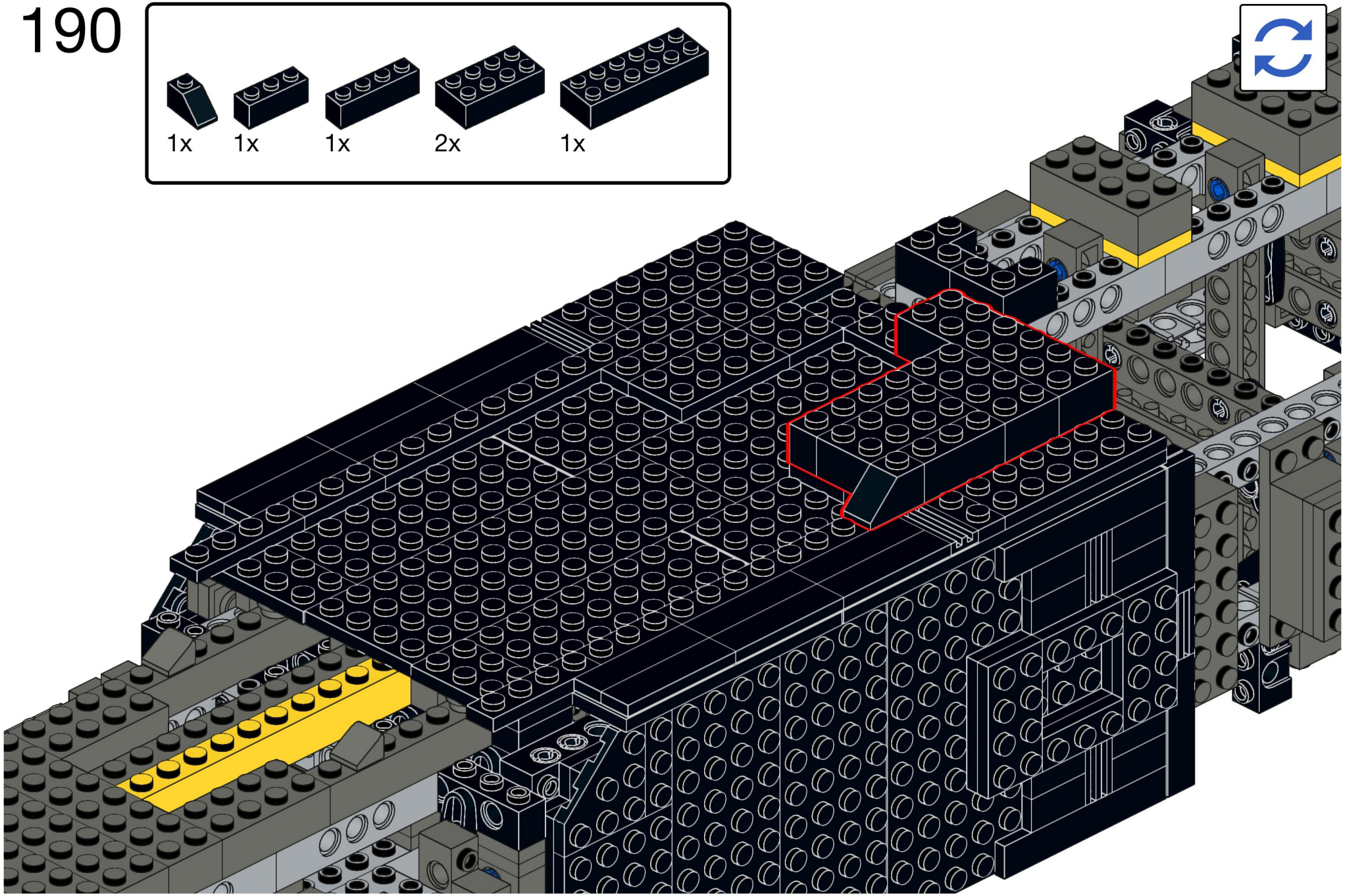

Designed by Michael Gertsch

191

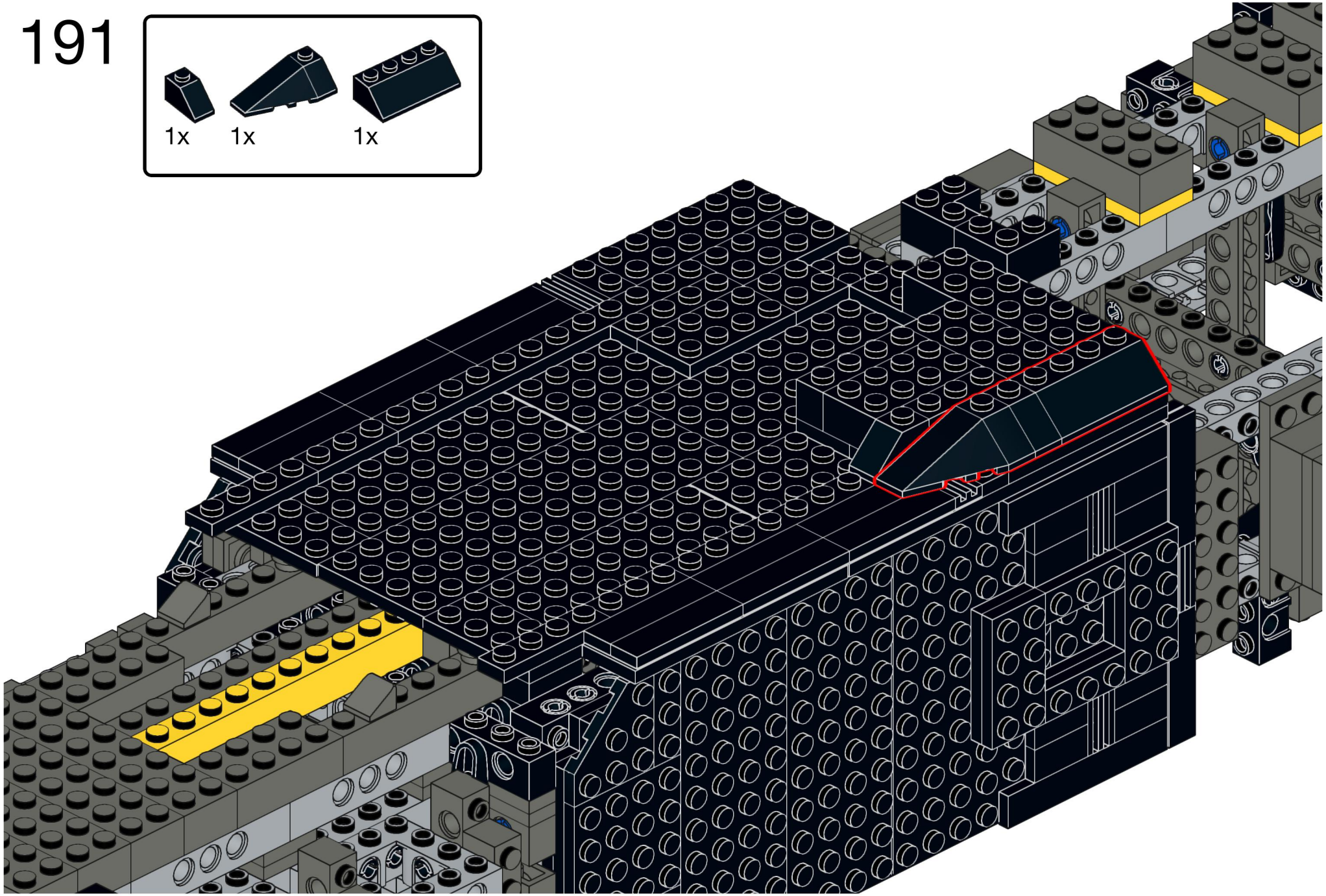

Designed by Michael Gertsch

192

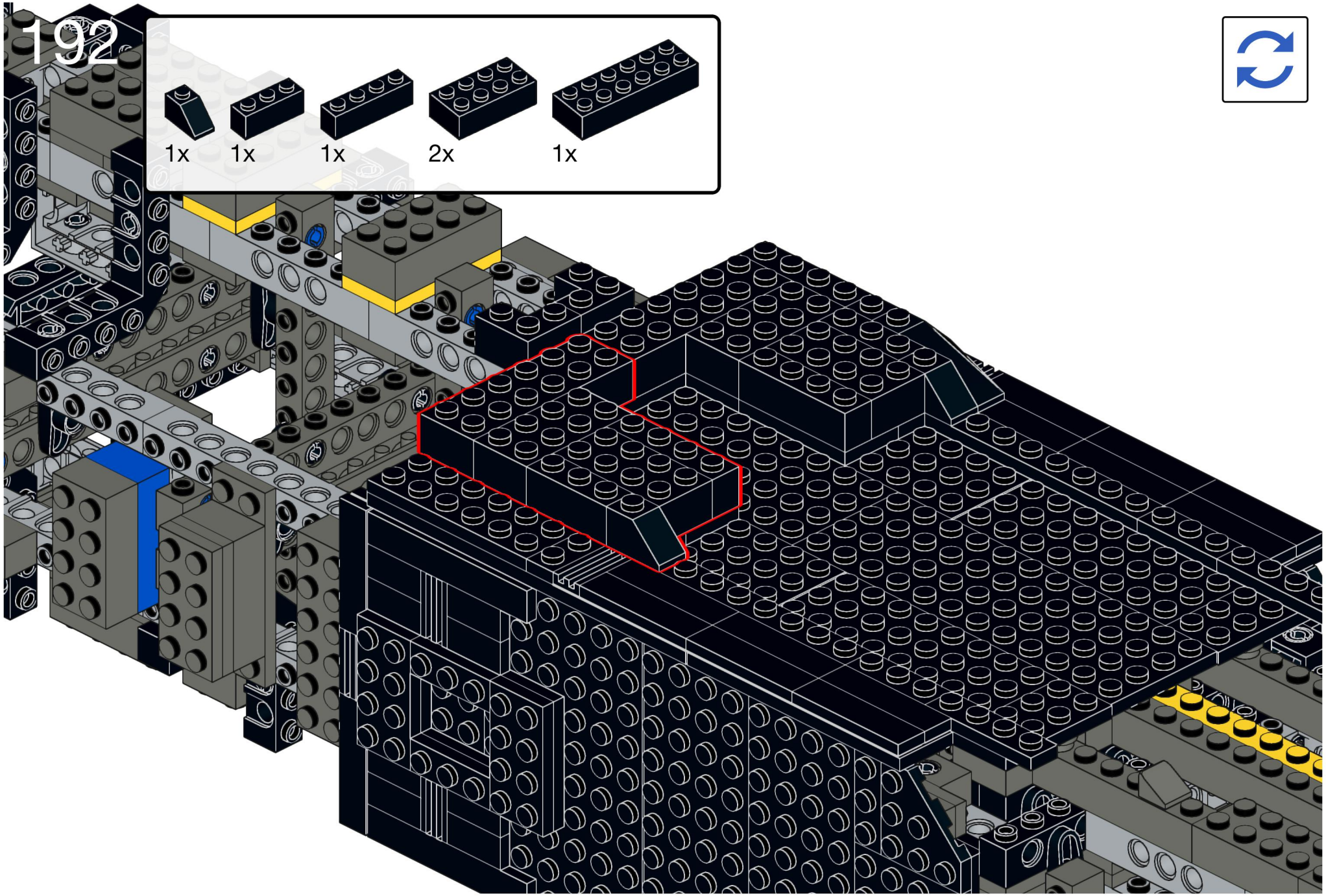

Designed by Michael Gertsch

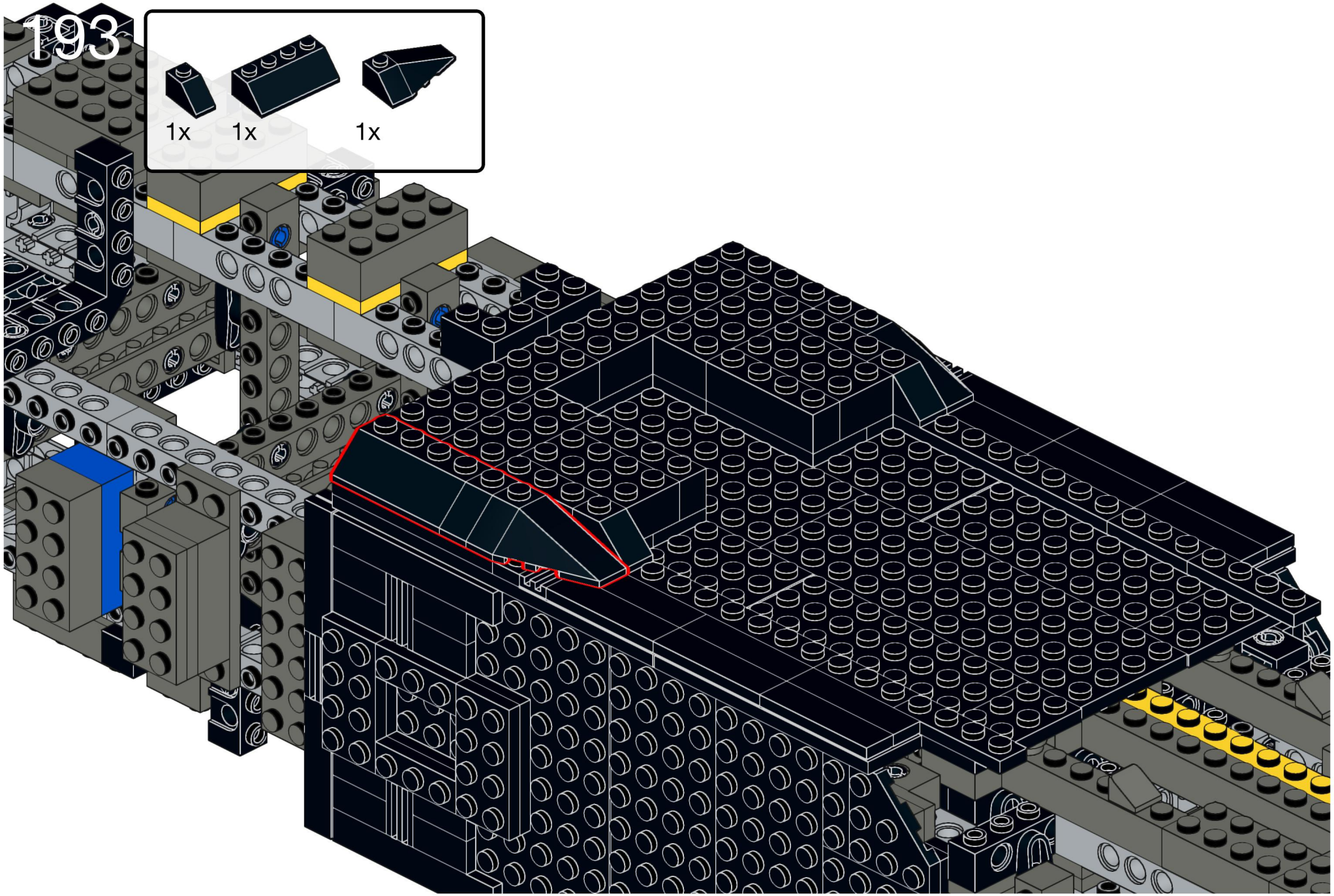

Designed by Michael Gertsch

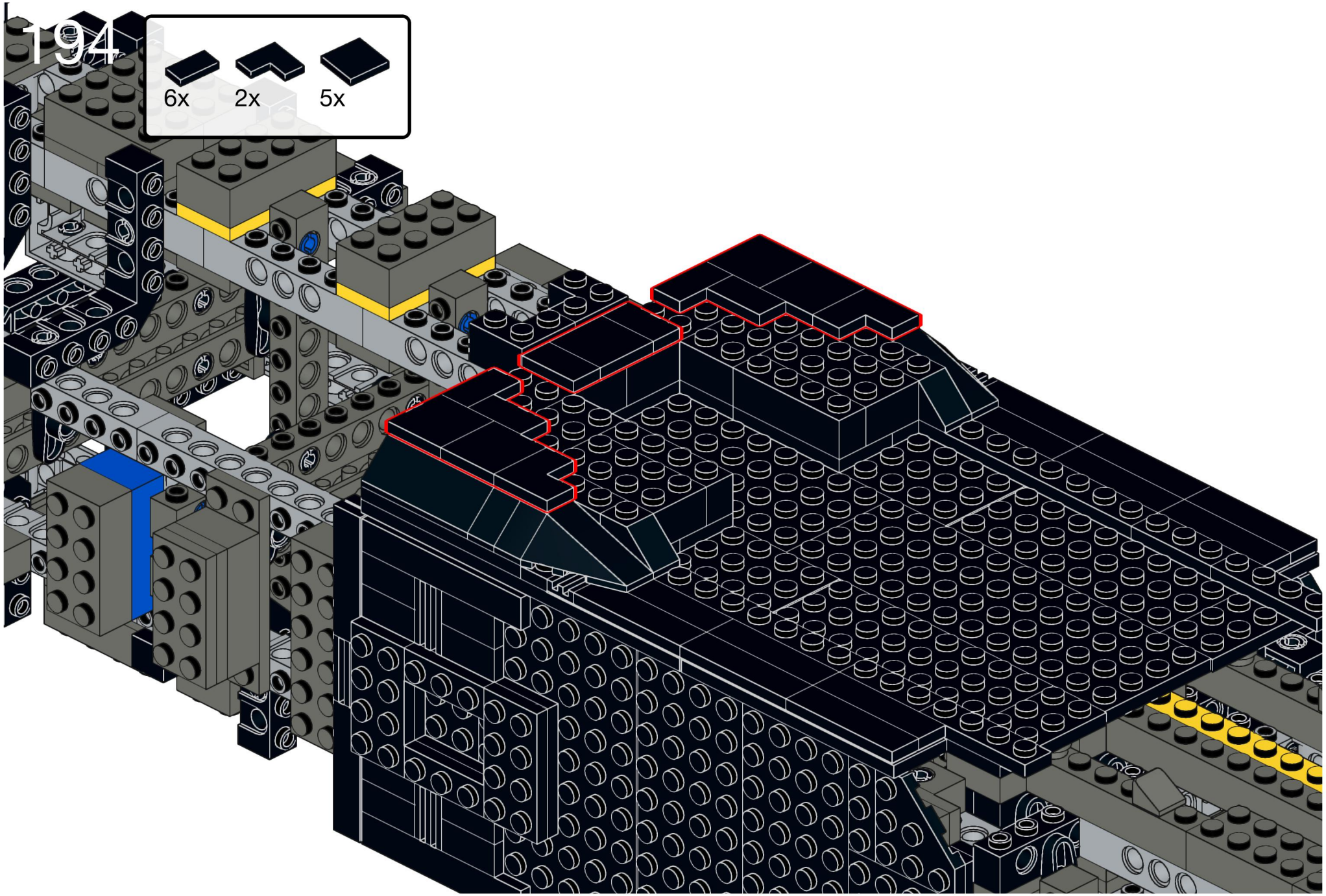
6x
2x
5x

195

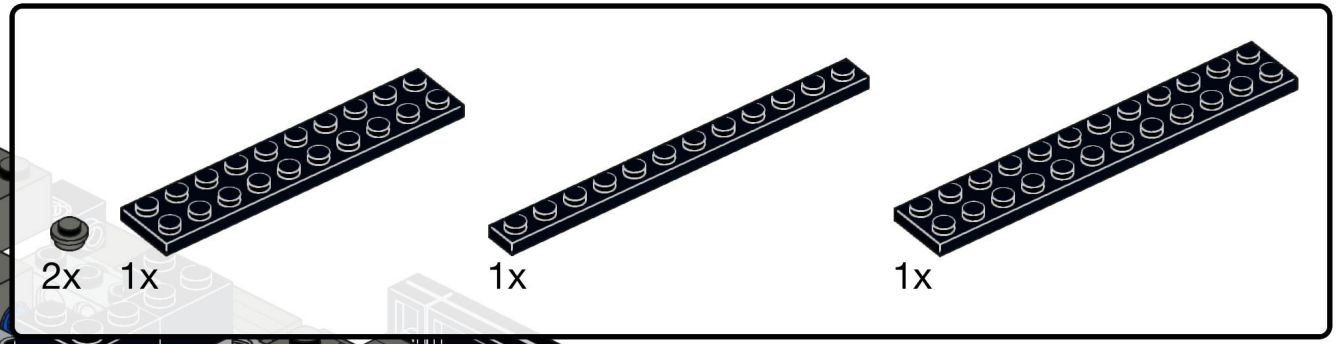

Designed by Michael Gertsch

196

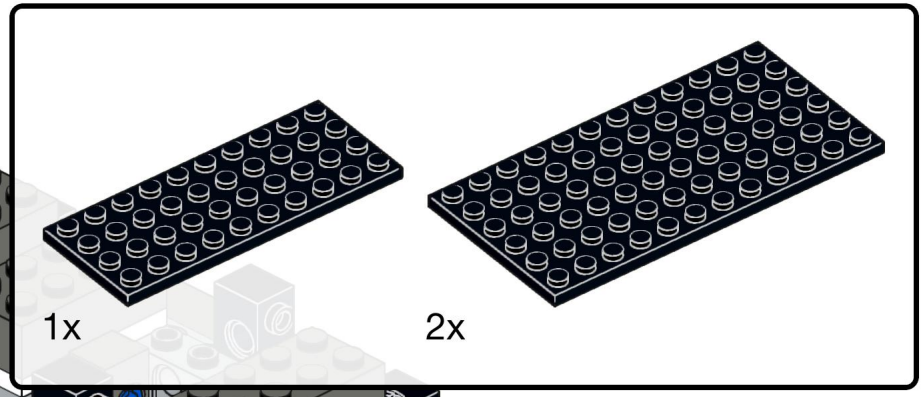

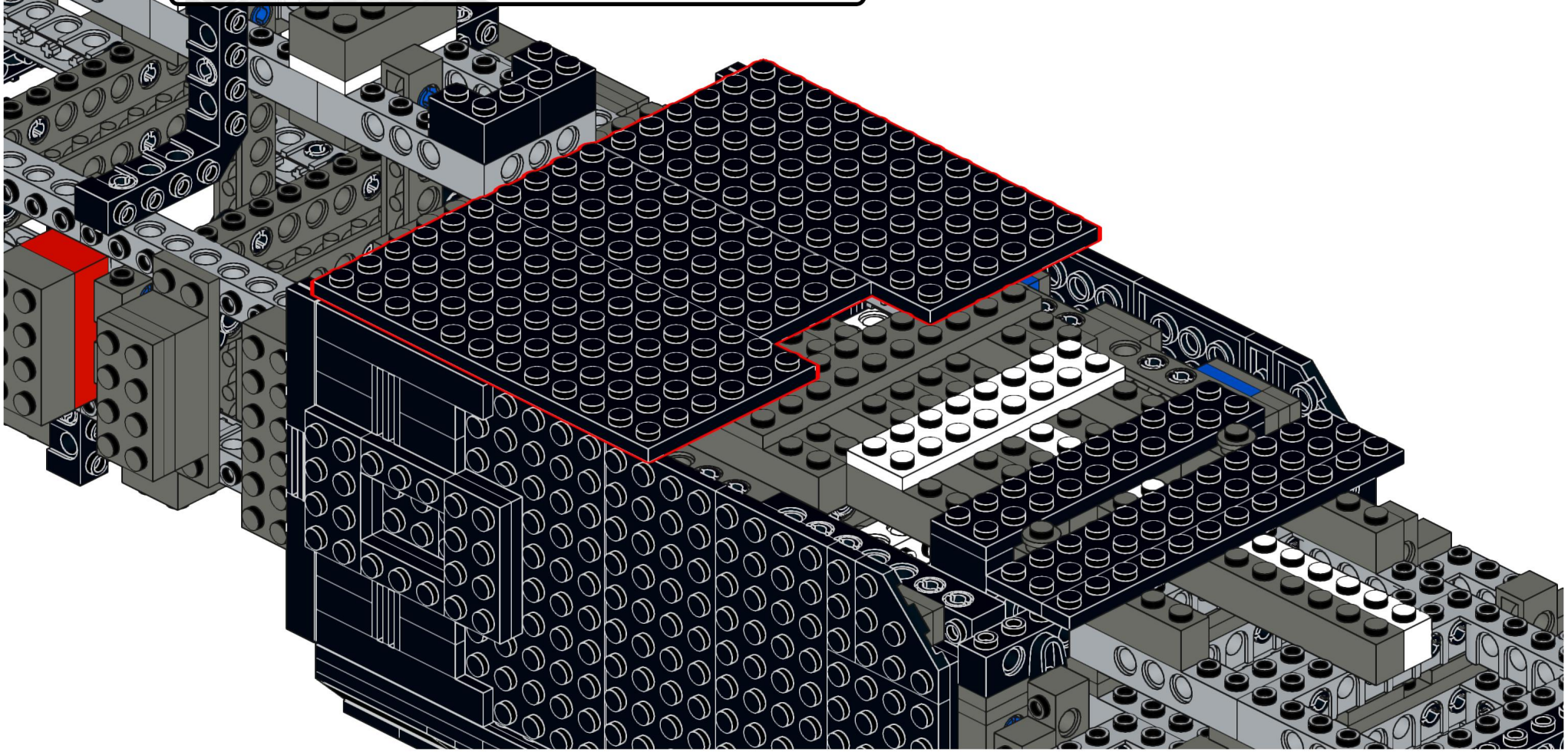

Designed by Michael Gertsch

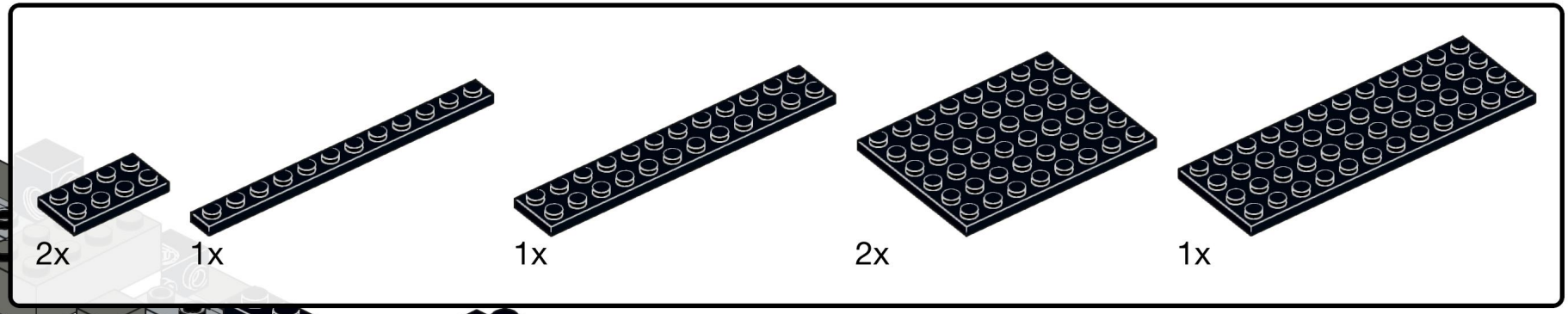
2x
1x
1x
2x
1x

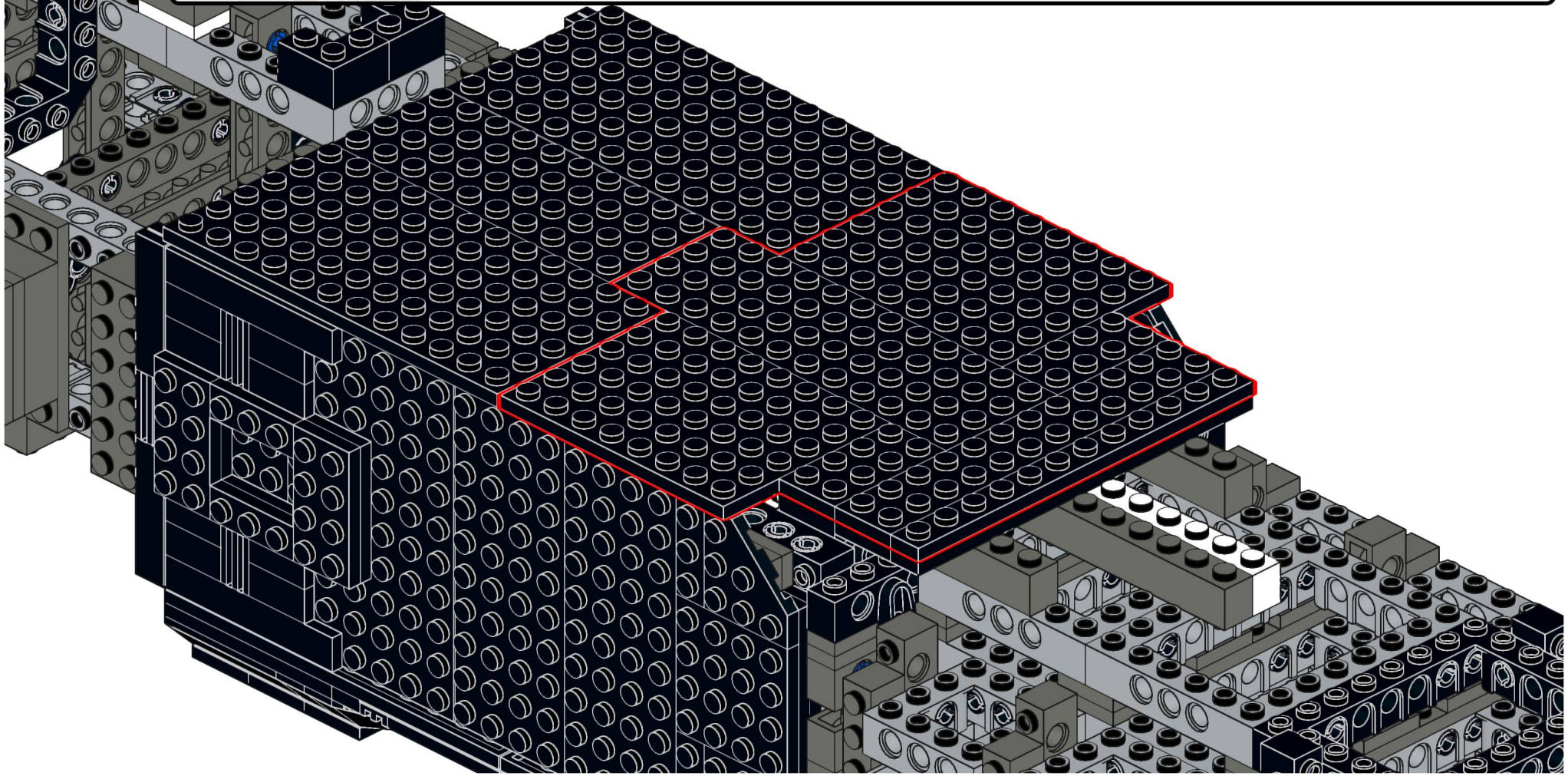

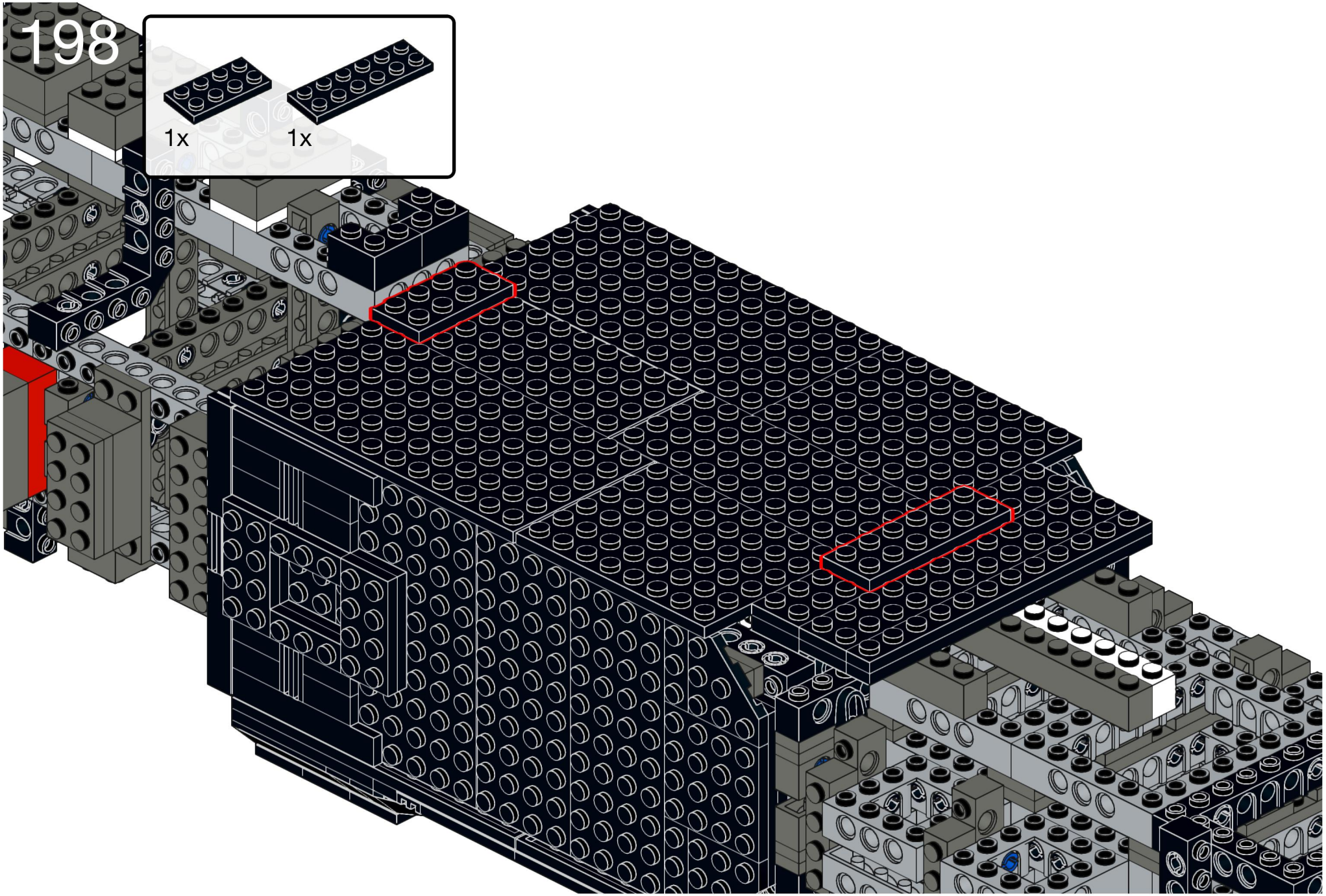

Designed by Michael Gertsch

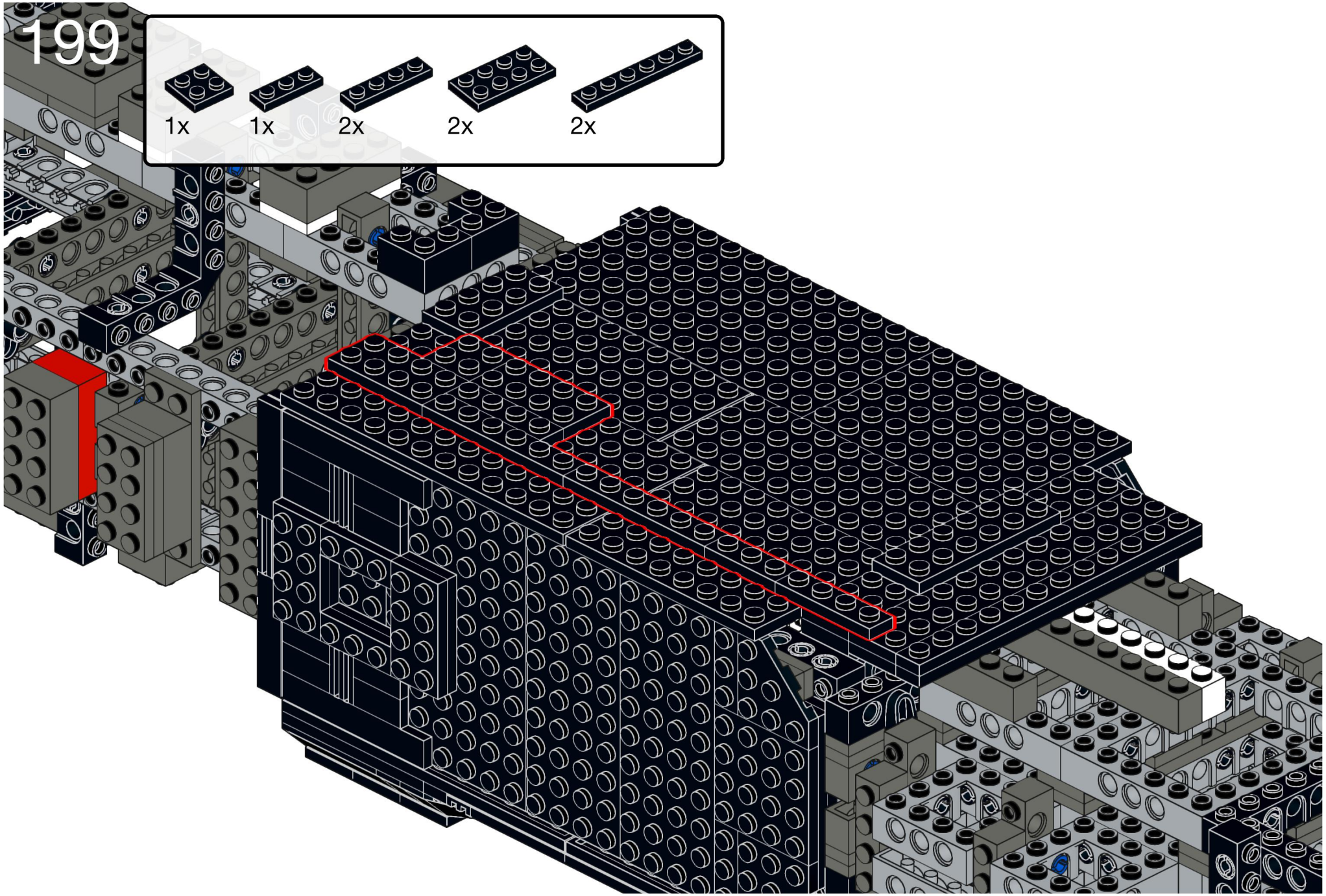

Designed by Michael Gertsch

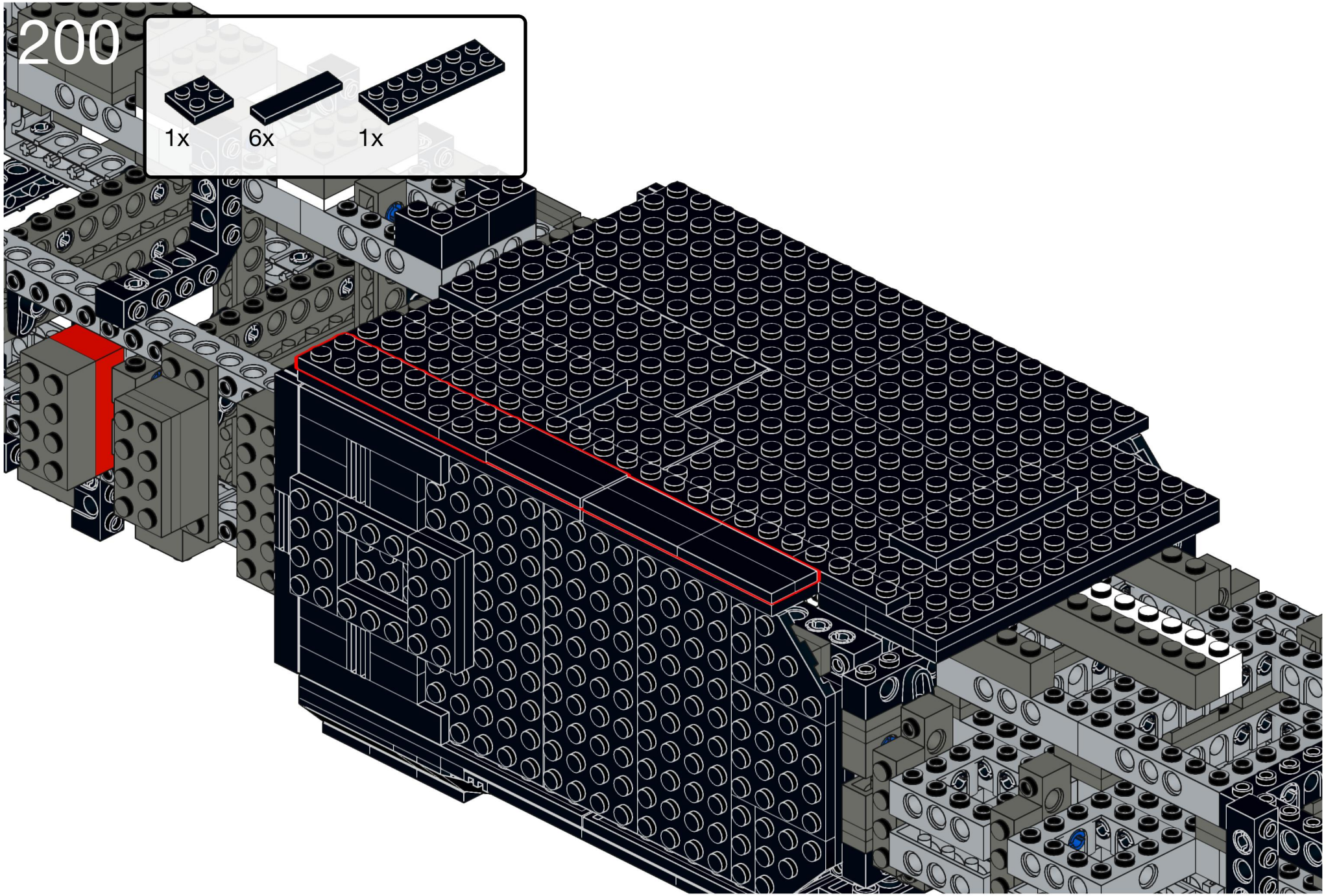

Designed by Michael Gertsch

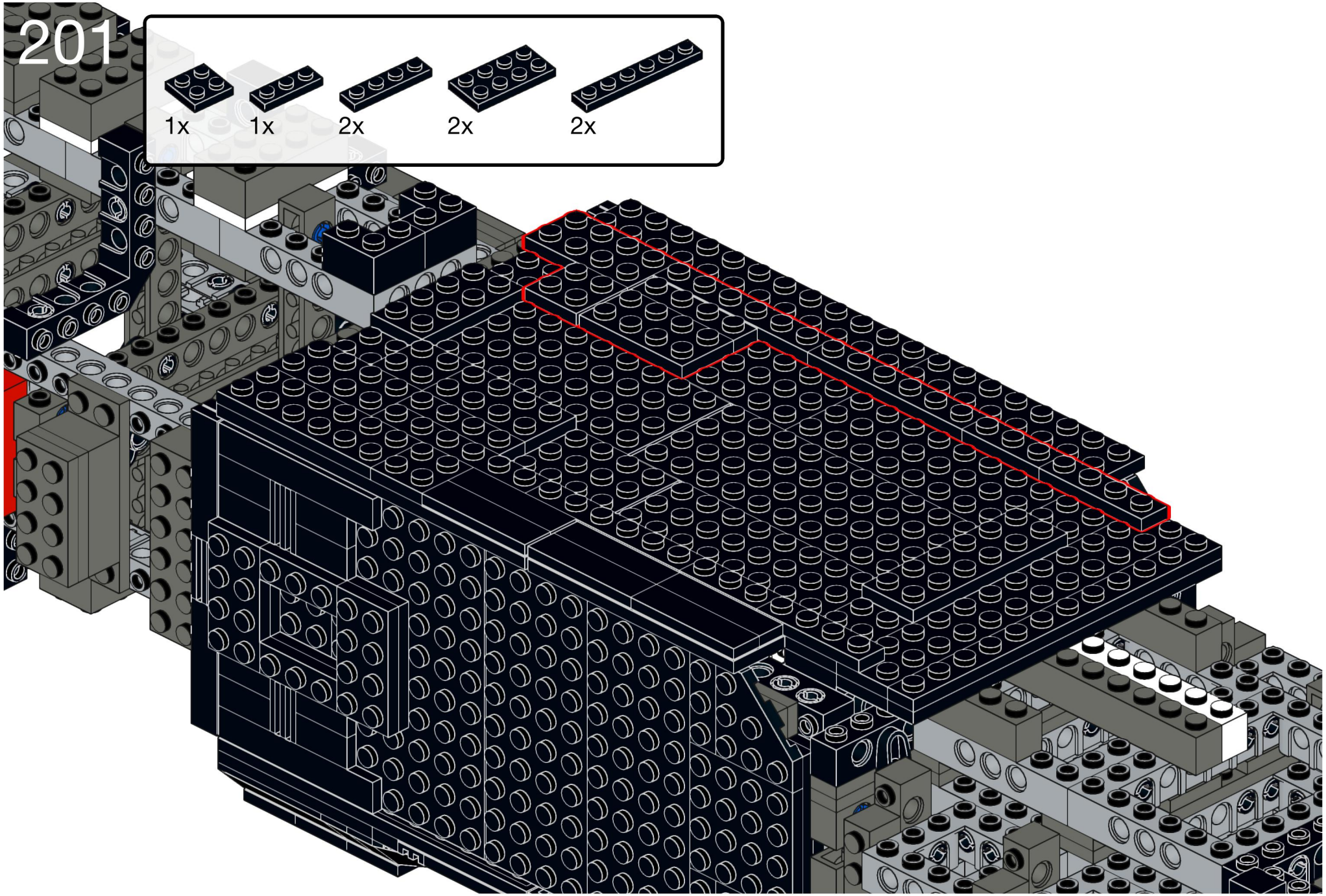

Designed by Michael Gertsch

202

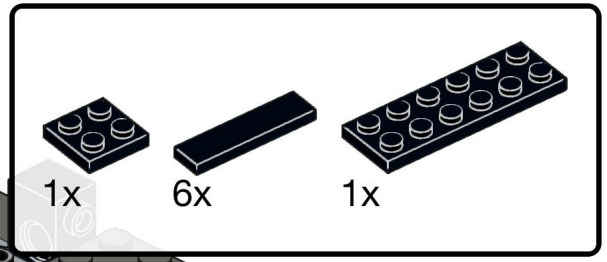

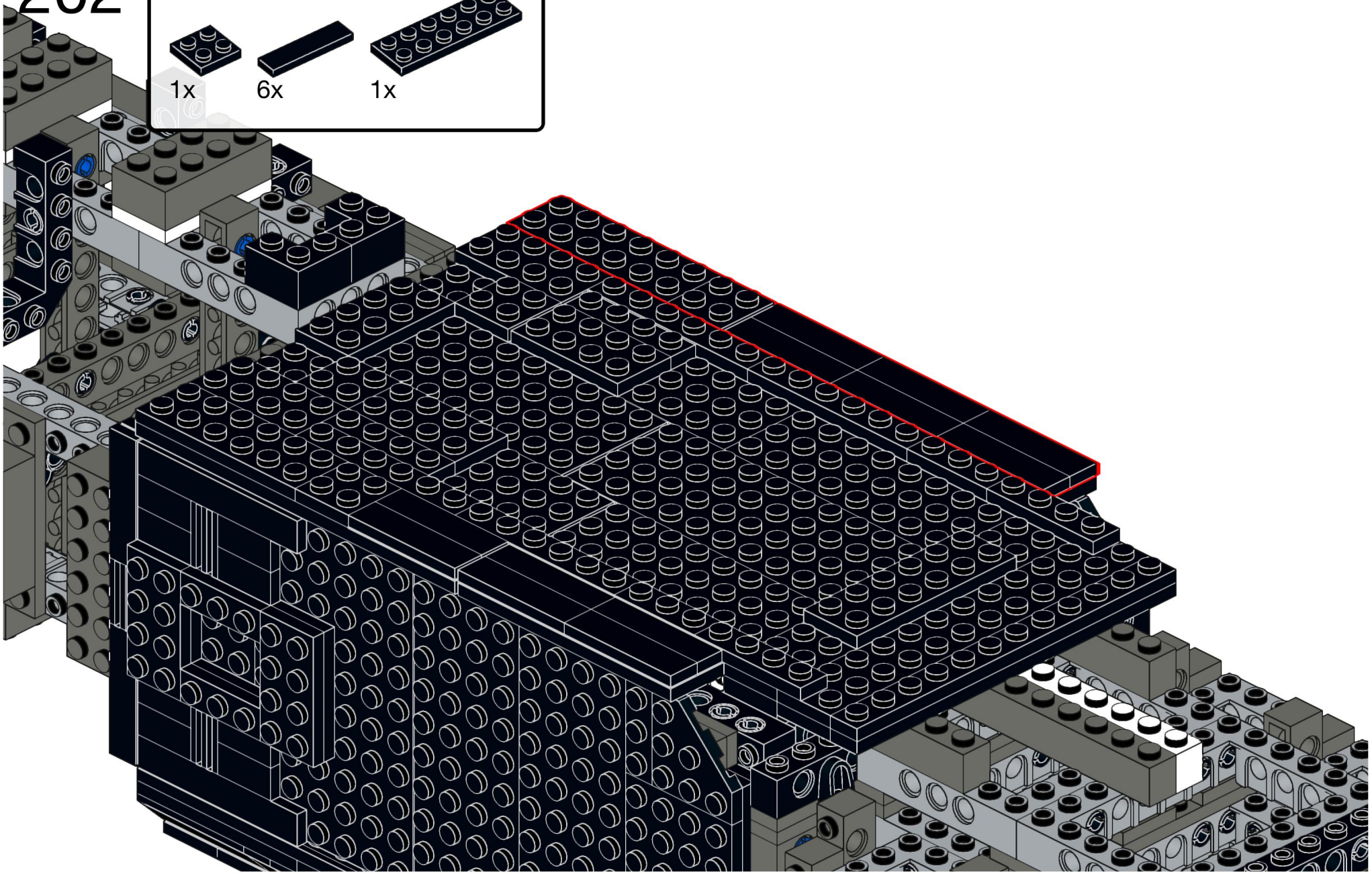

Designed by Michael Gertsch

203

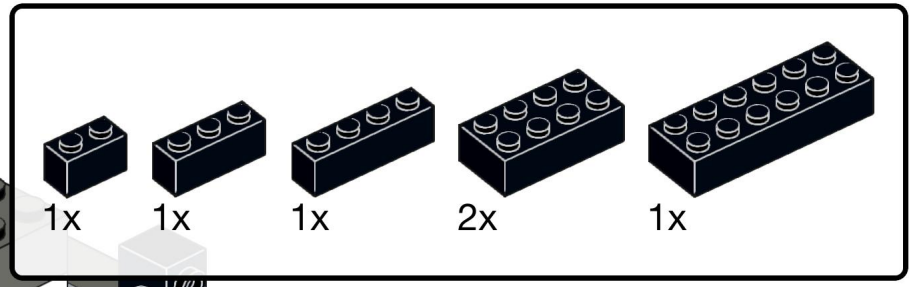

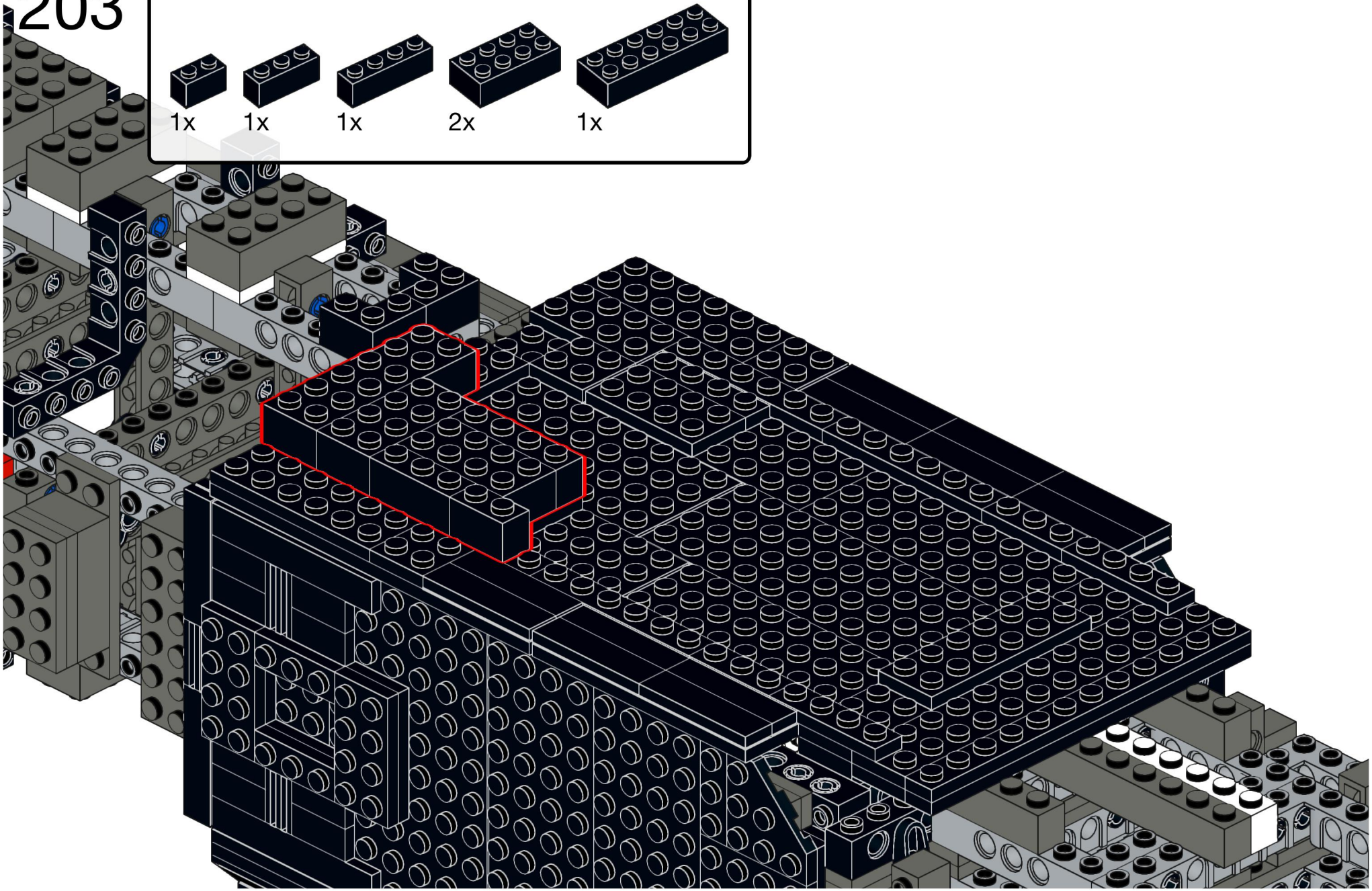

Designed by Michael Gertsch

204

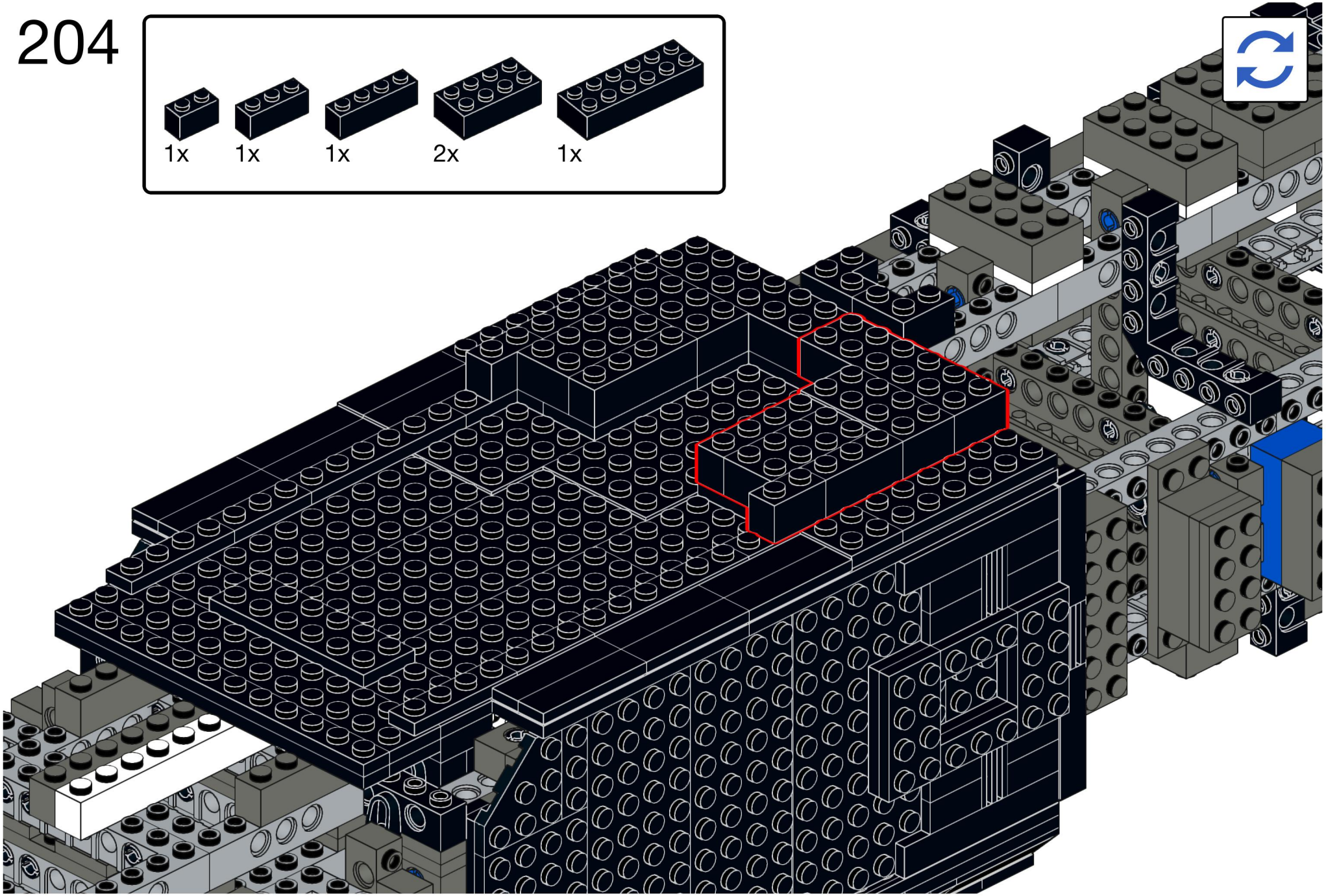

Designed by Michael Gertsch

205

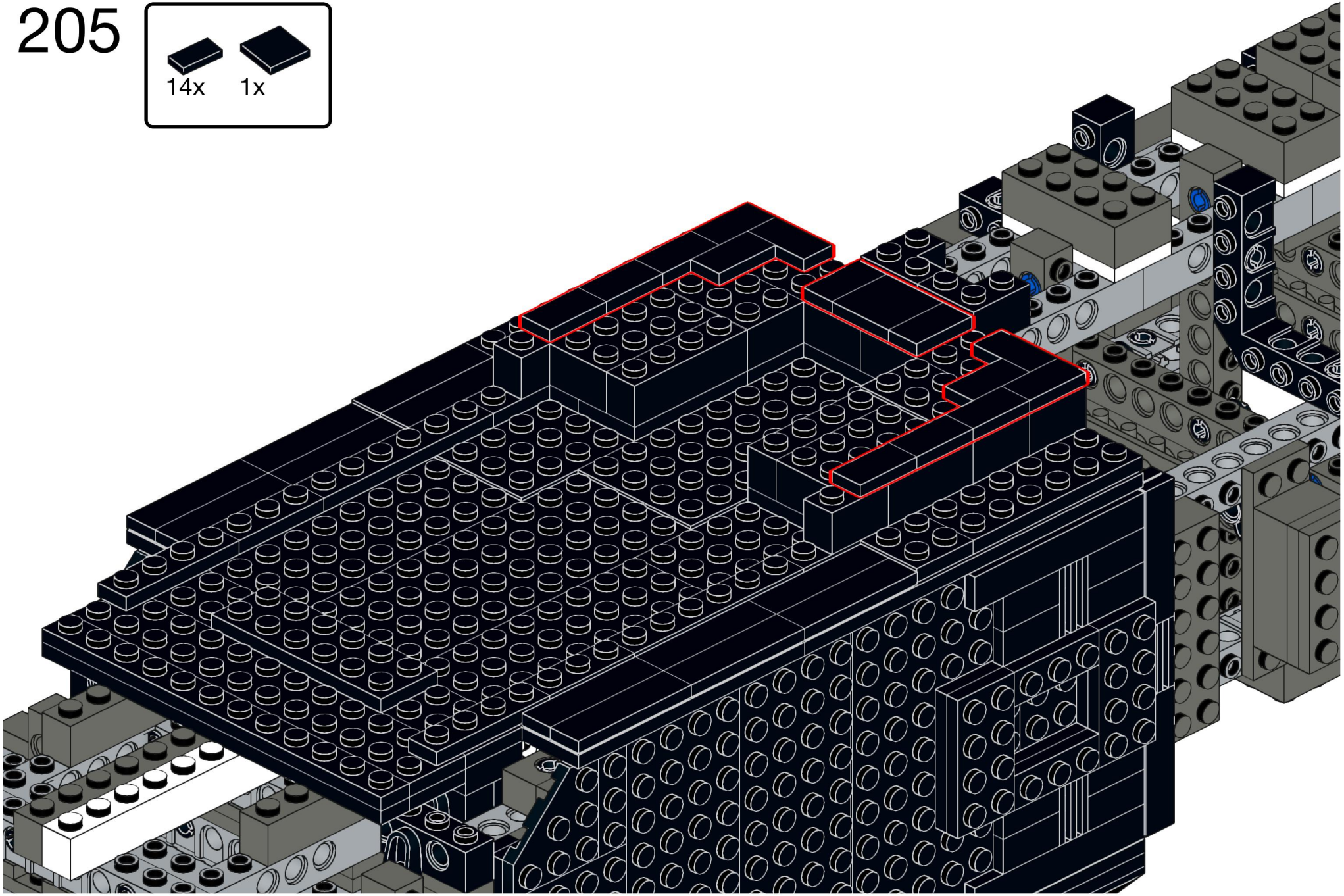

Designed by Michael Gertsch

206

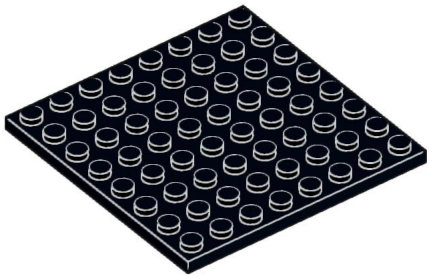

2x

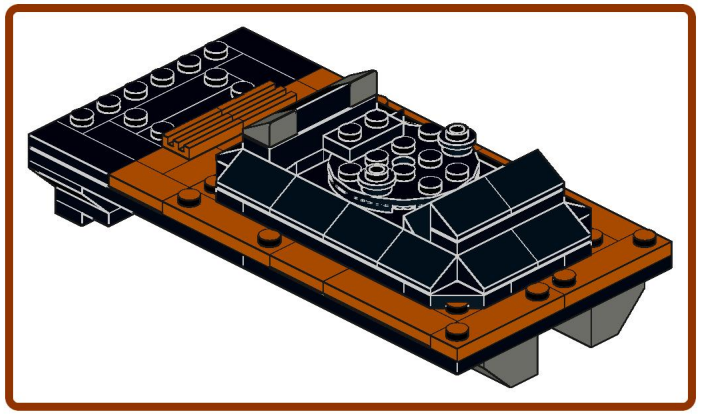

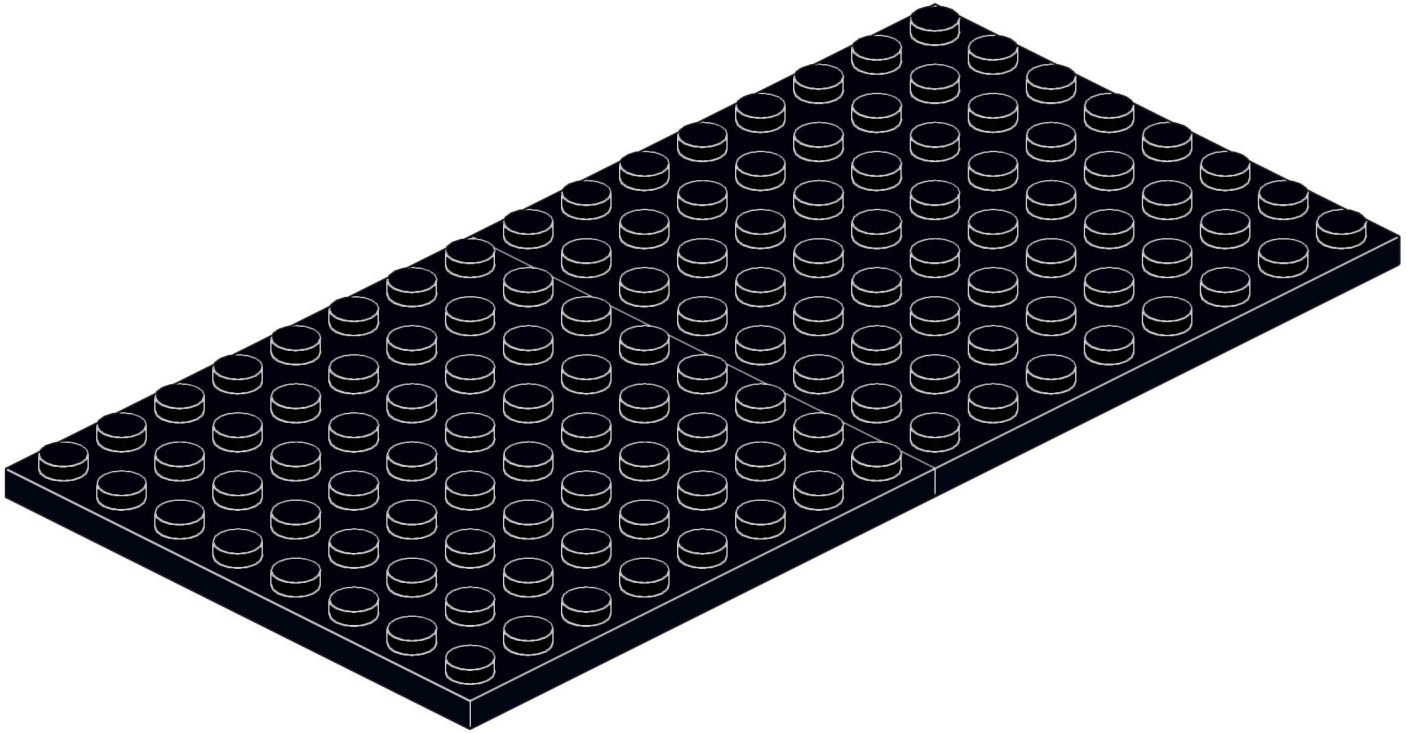

Designed by Michael Gertsch

207

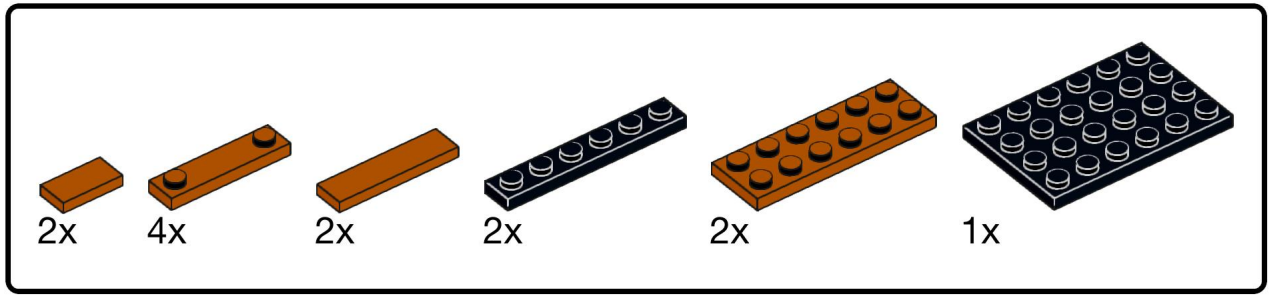

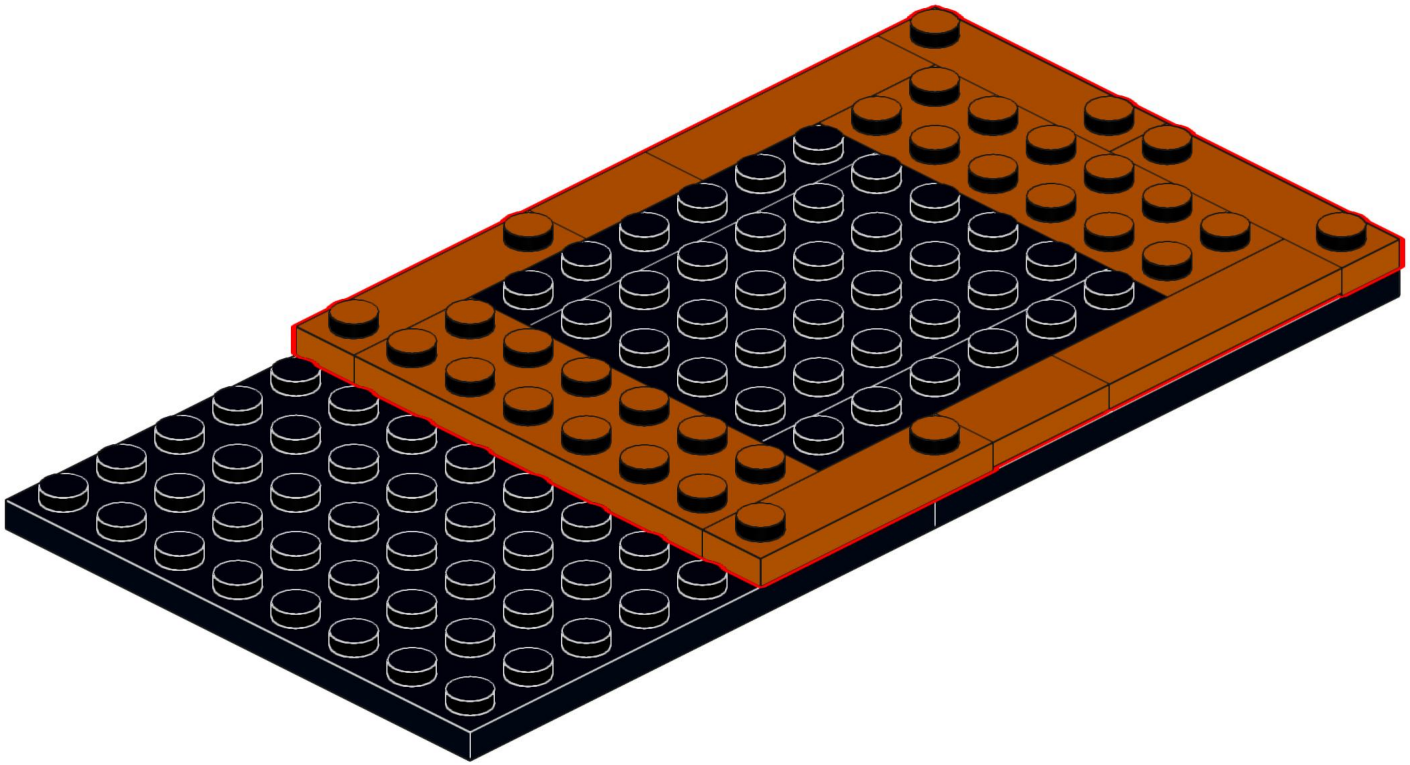

Designed by Michael Gertsch

208

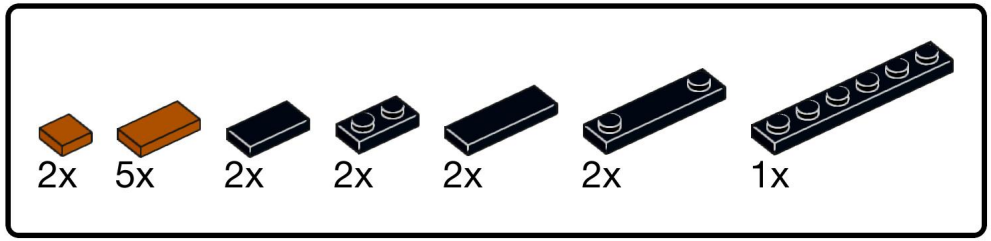

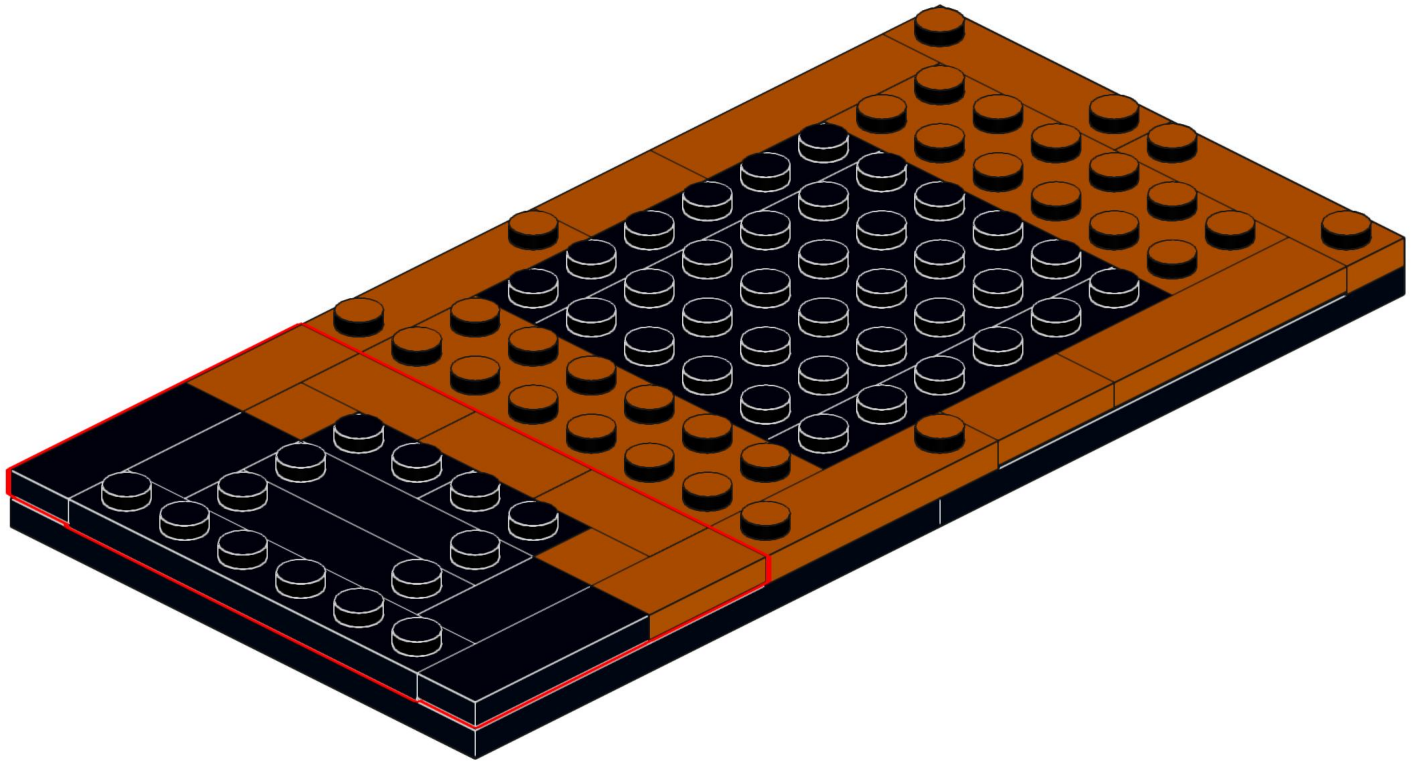

Designed by Michael Gertsch

209

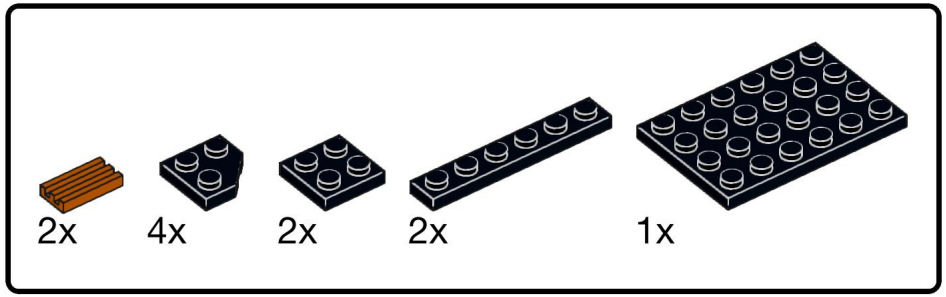

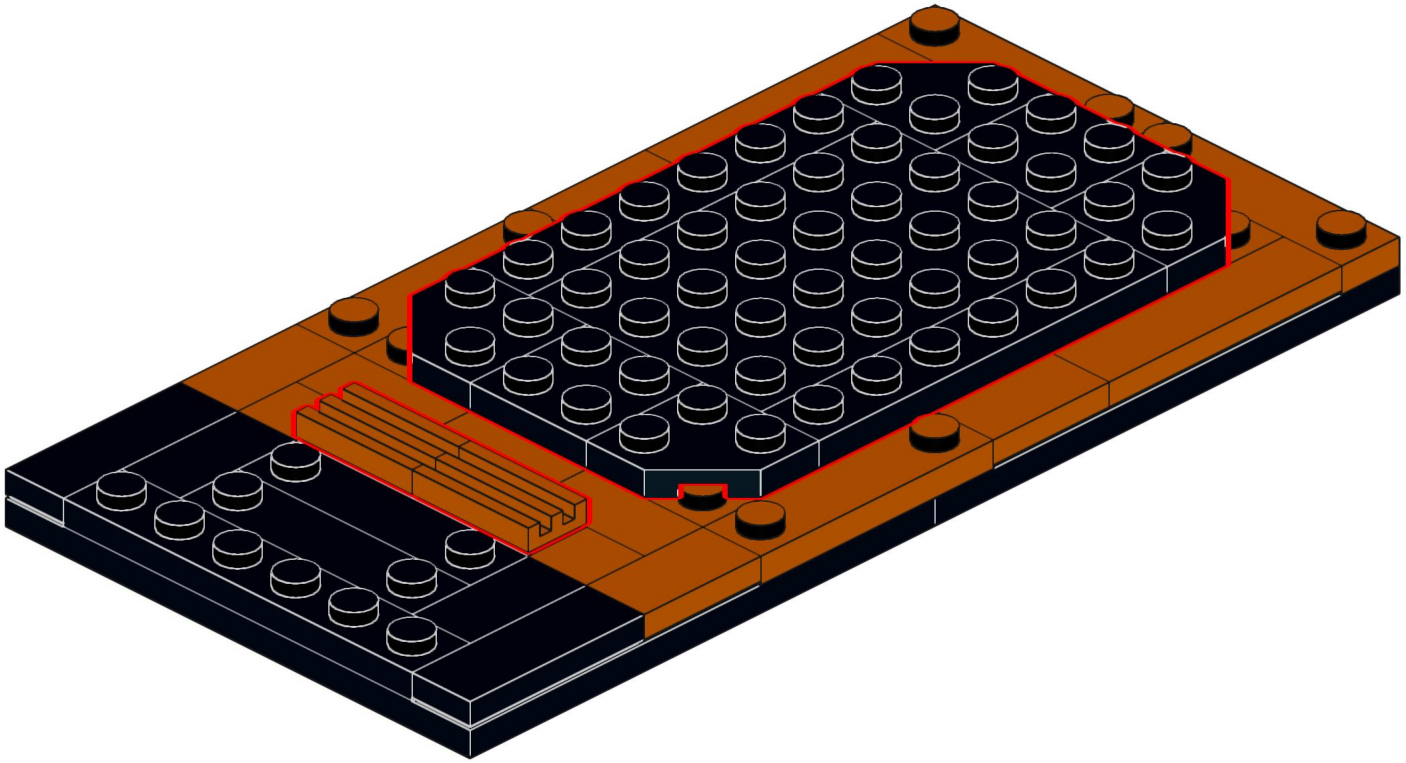

Designed by Michael Gertsch

210

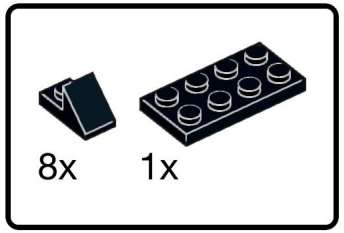

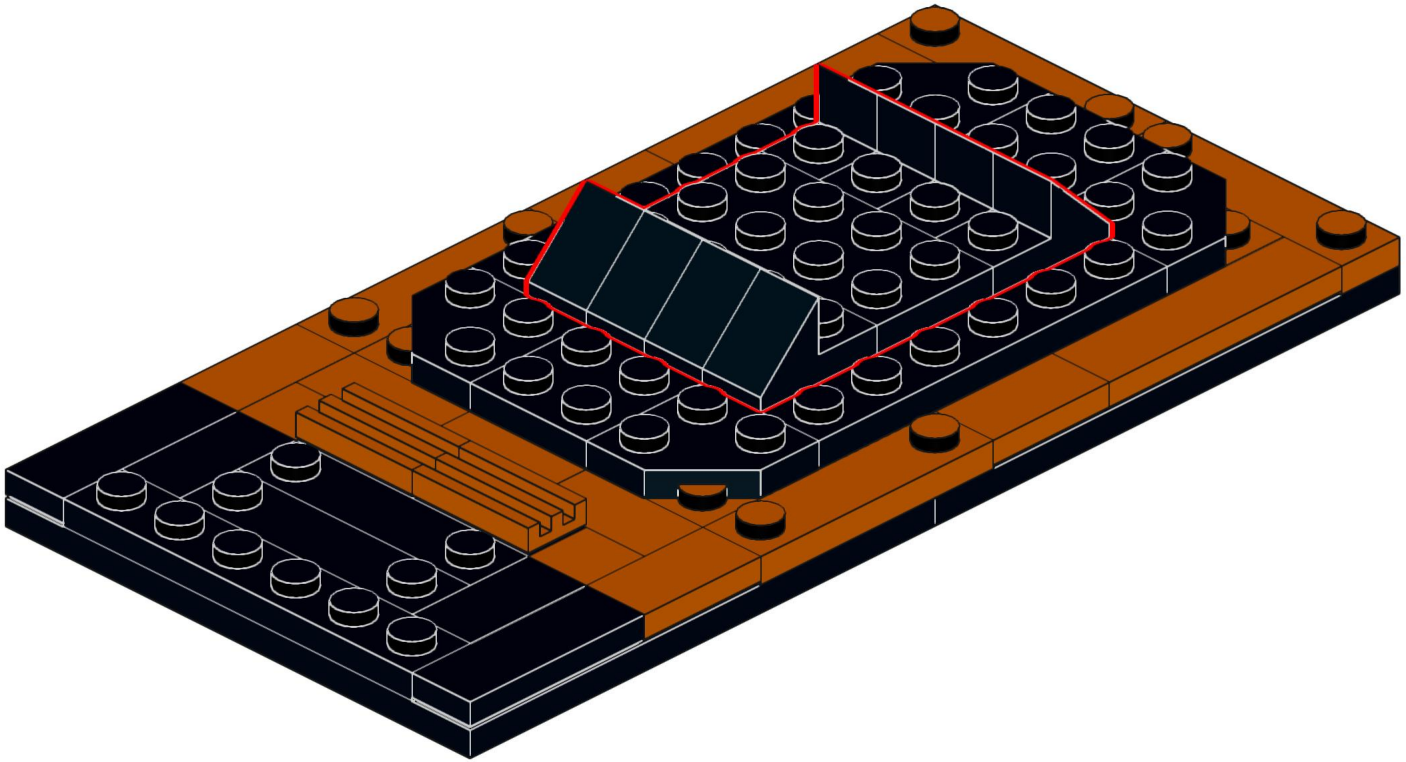

Designed by Michael Gertsch

211

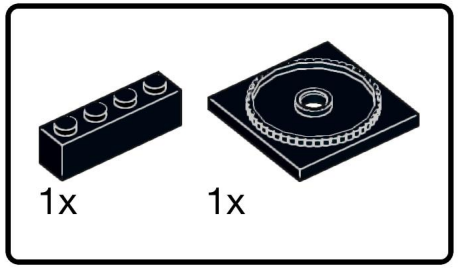

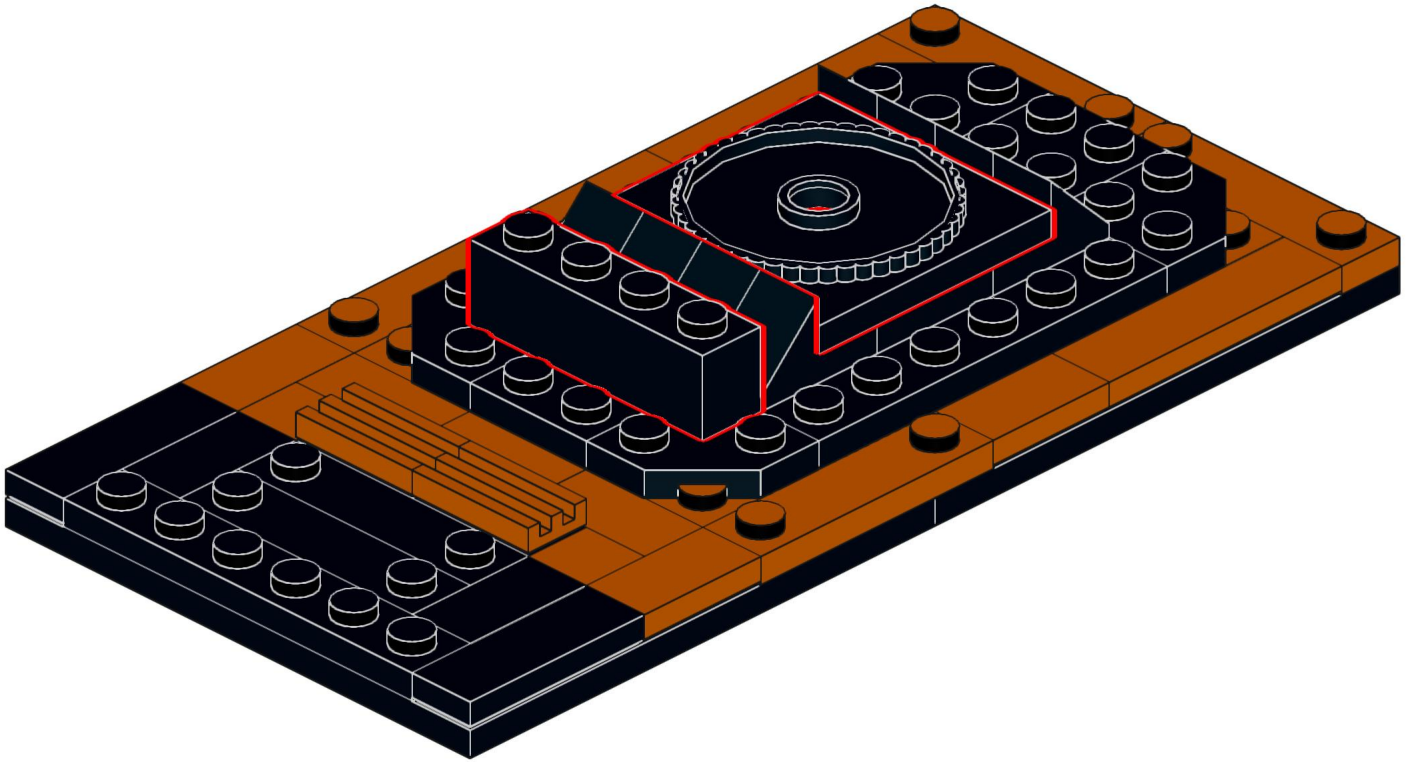

Designed by Michael Gertsch

212

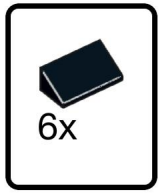

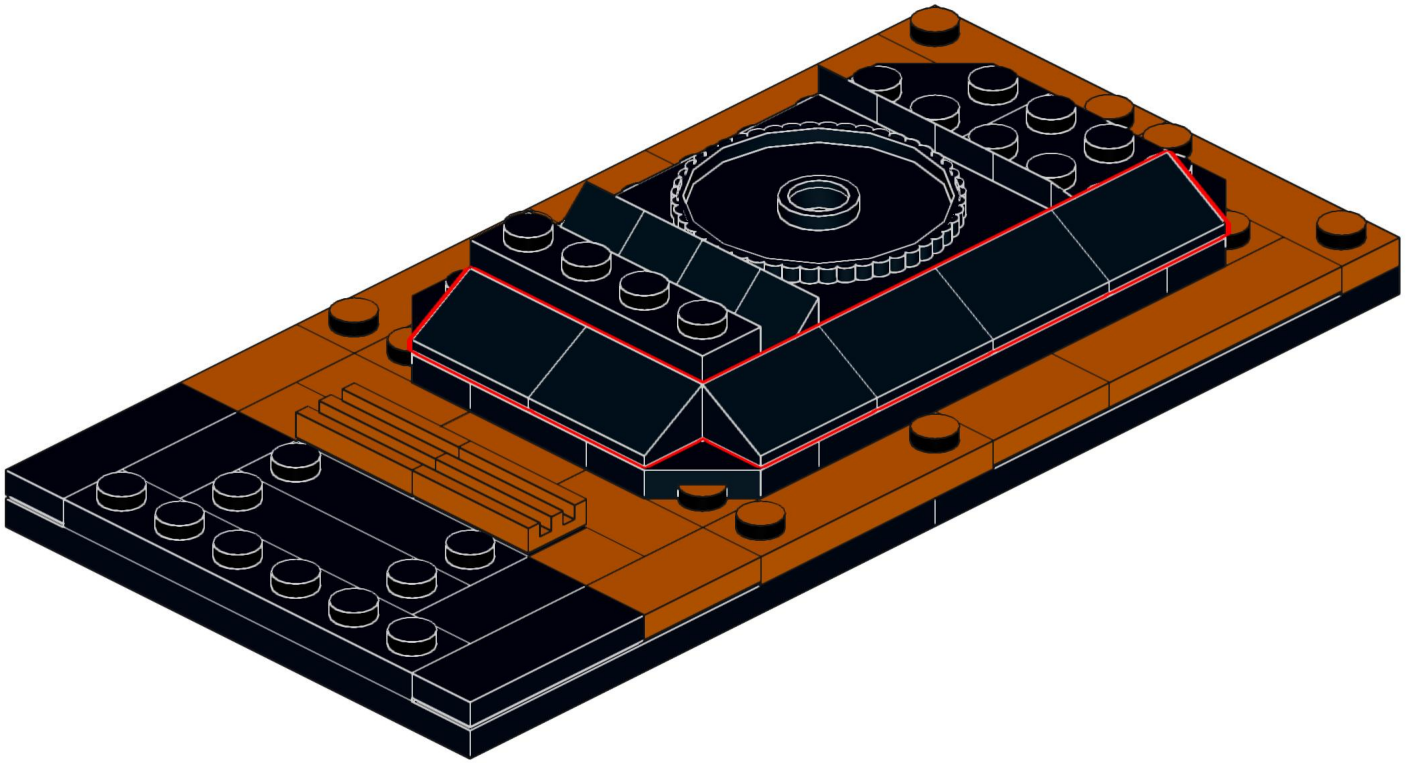

Designed by Michael Gertsch

213

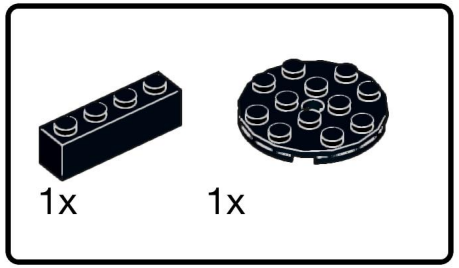

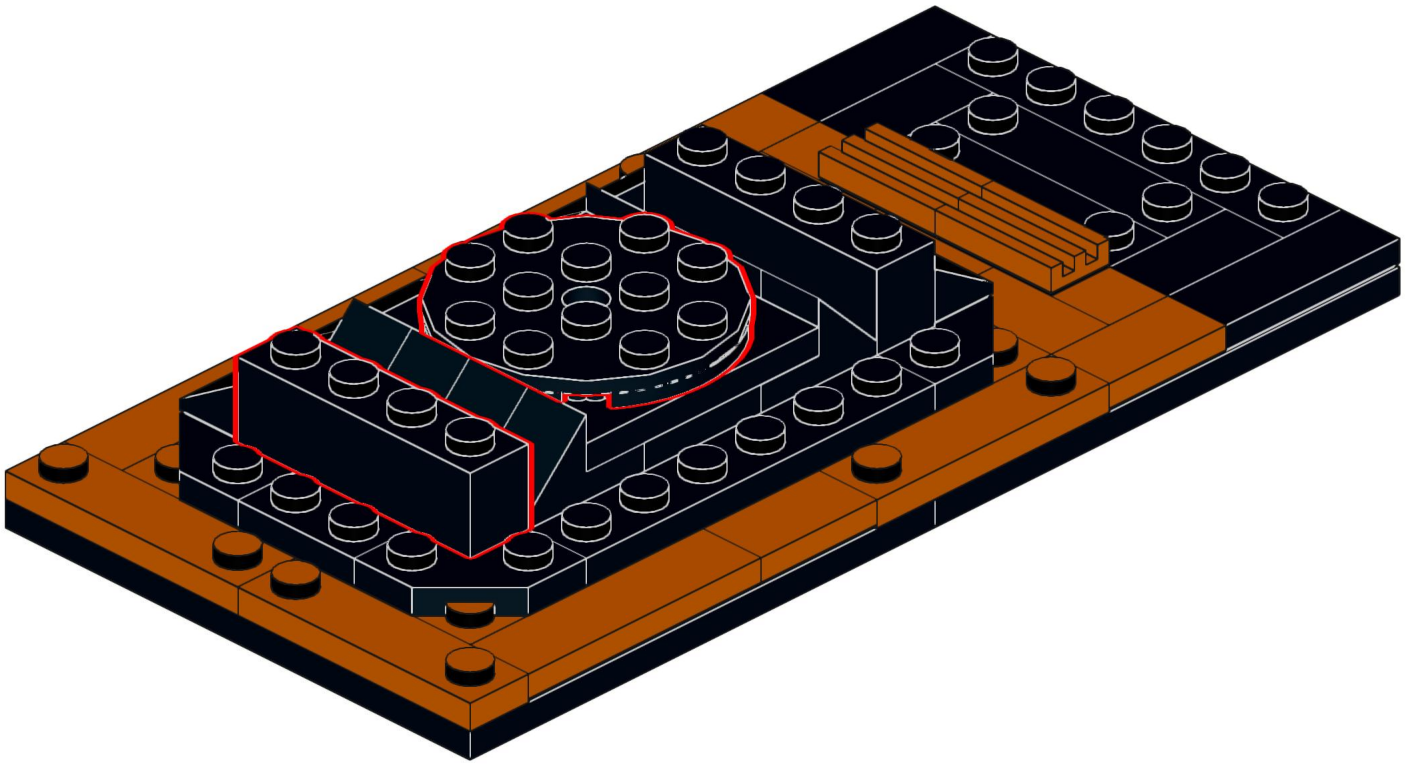

Designed by Michael Gertsch

214

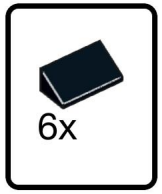

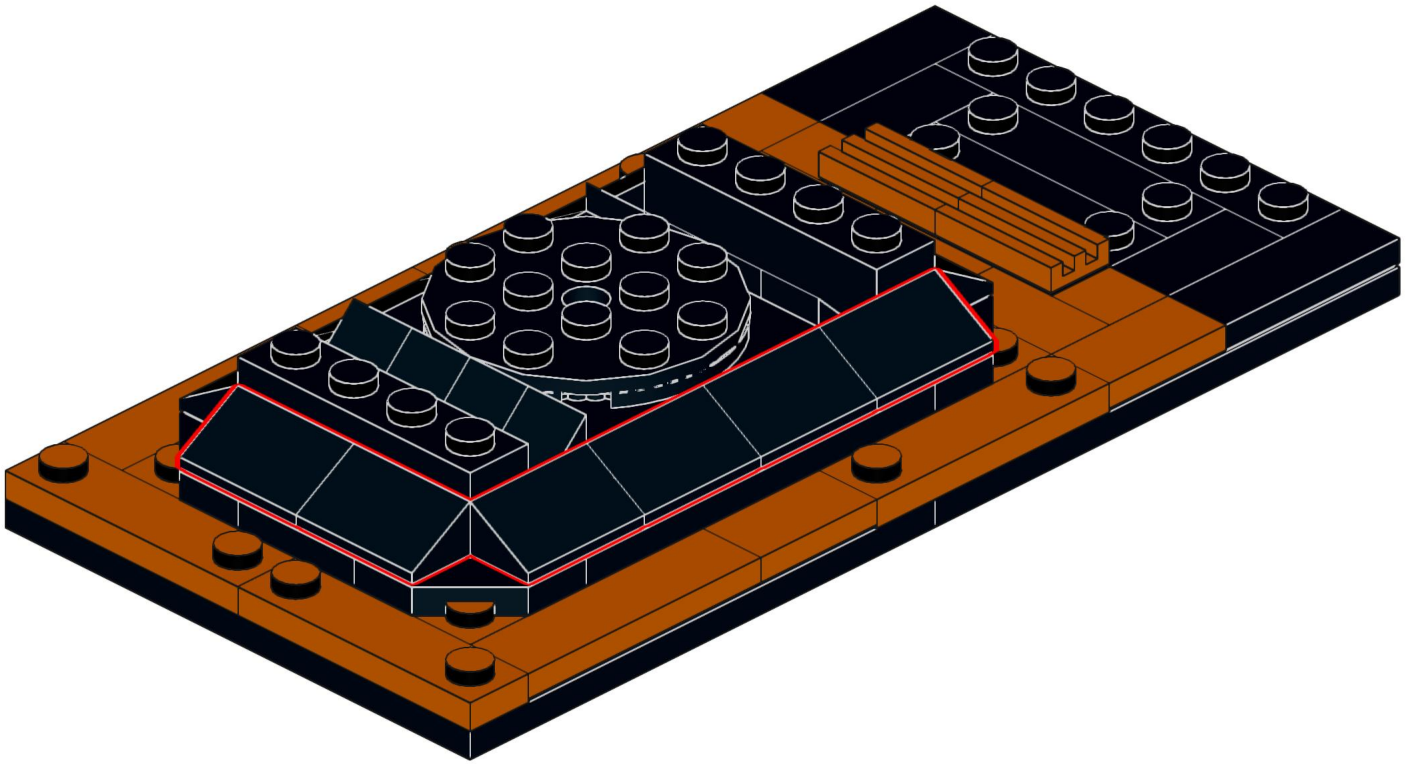

Designed by Michael Gertsch

215

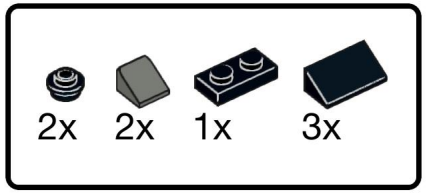

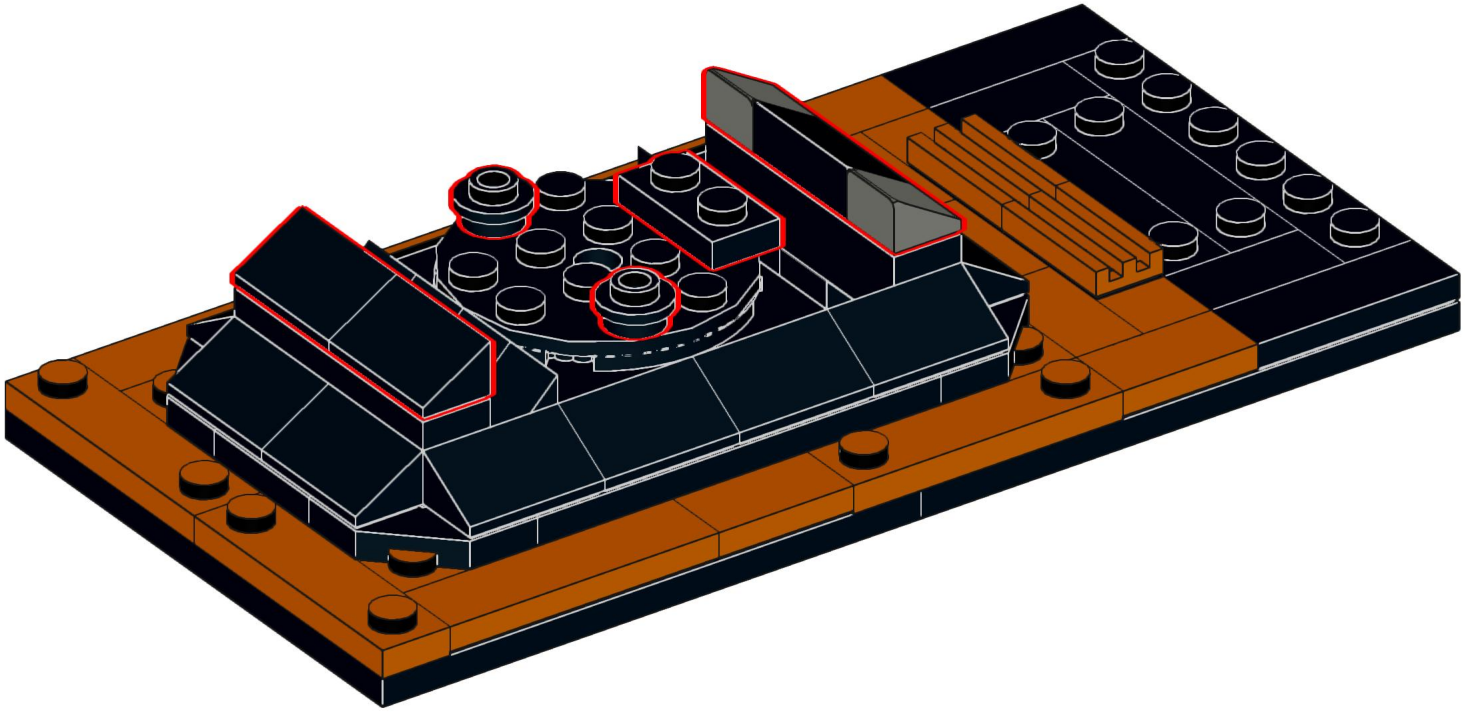

Designed by Michael Gertsch

216

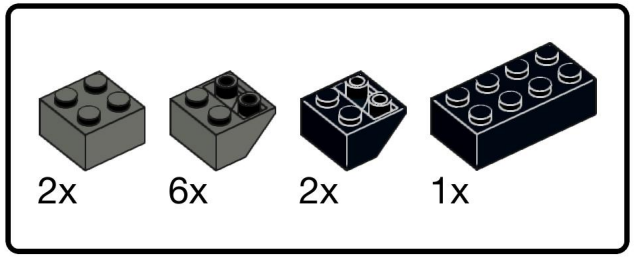

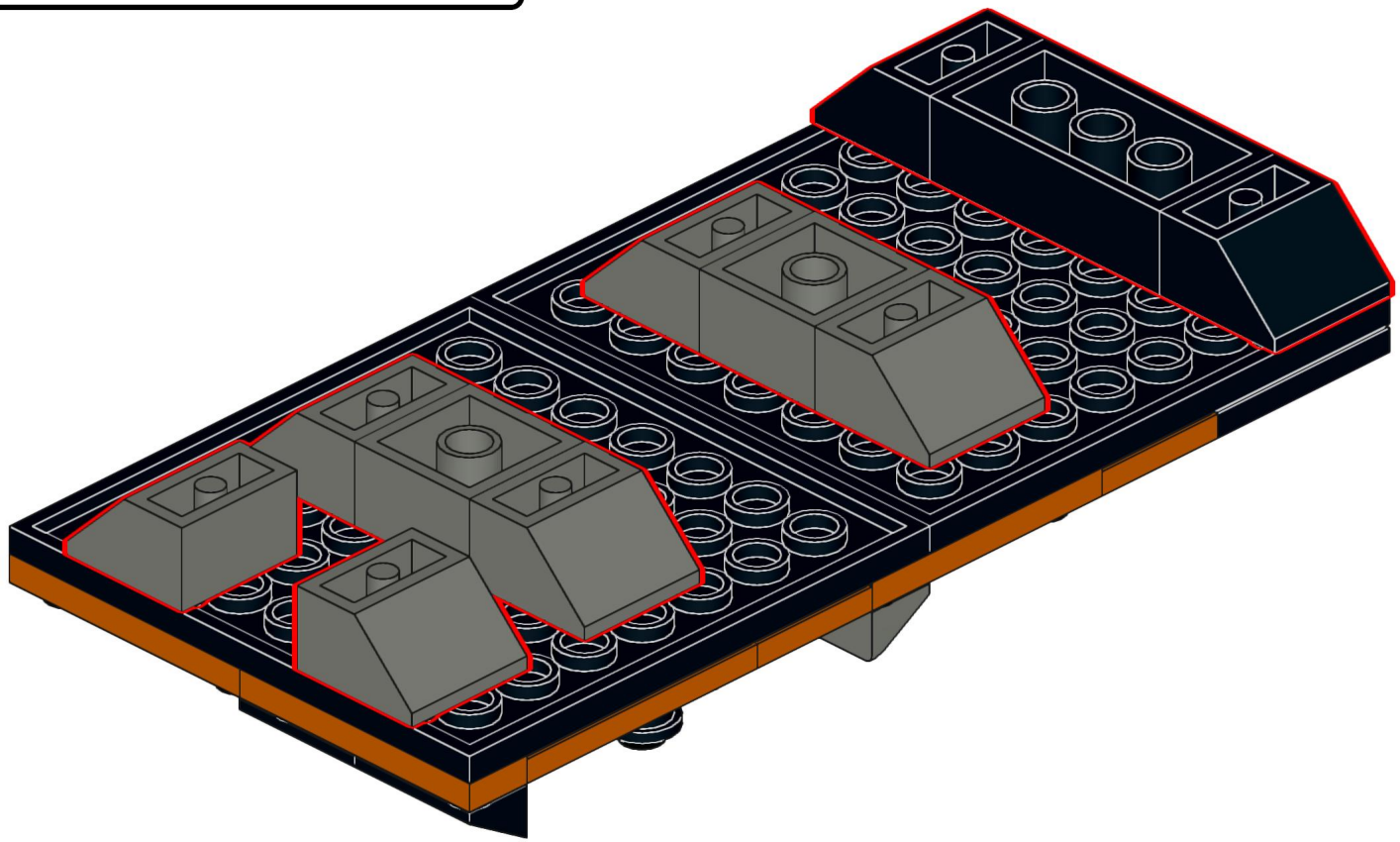

217

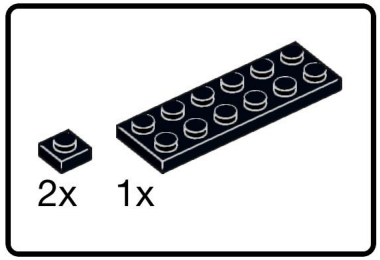

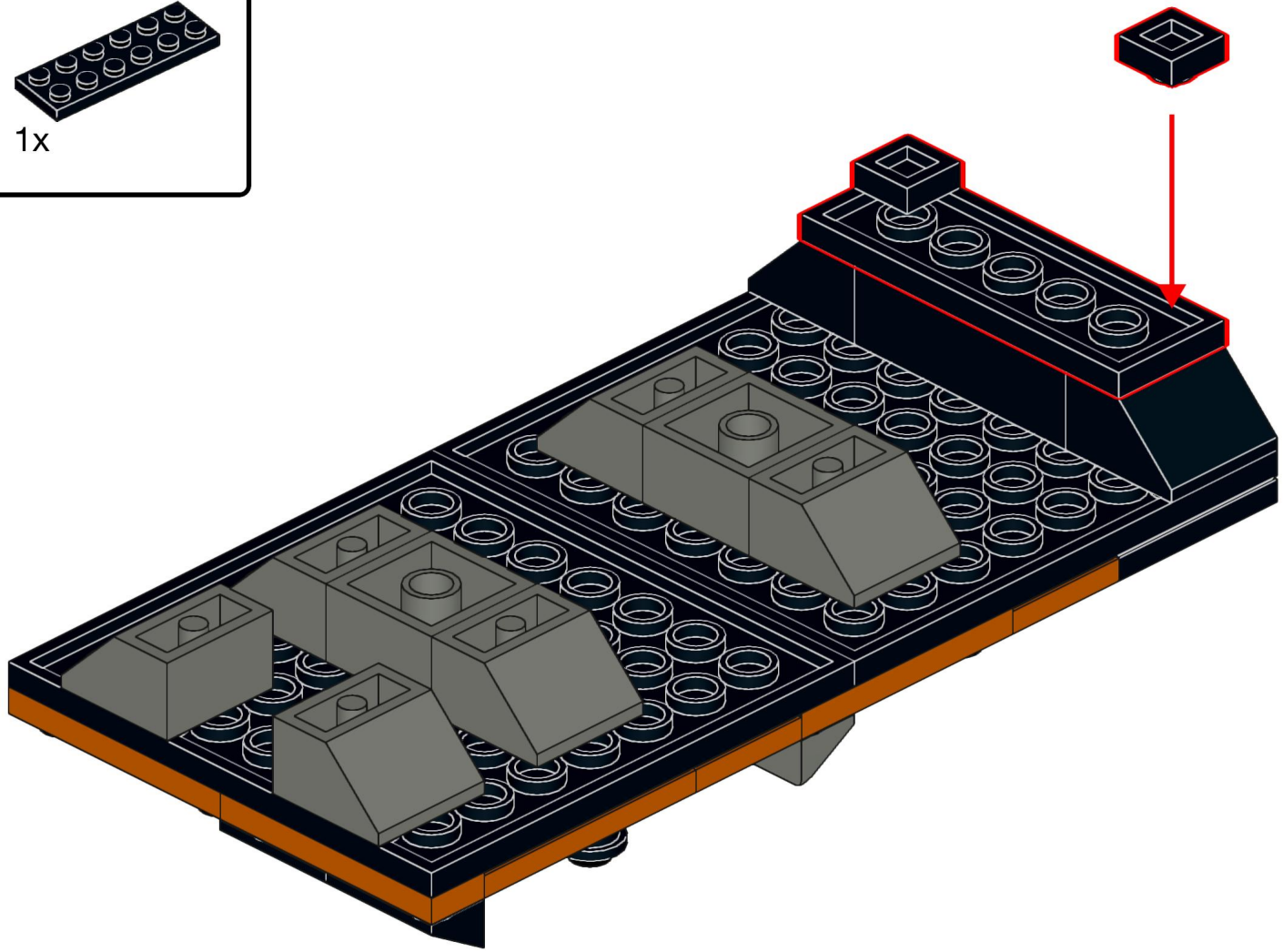

Designed by Michael Gertsch

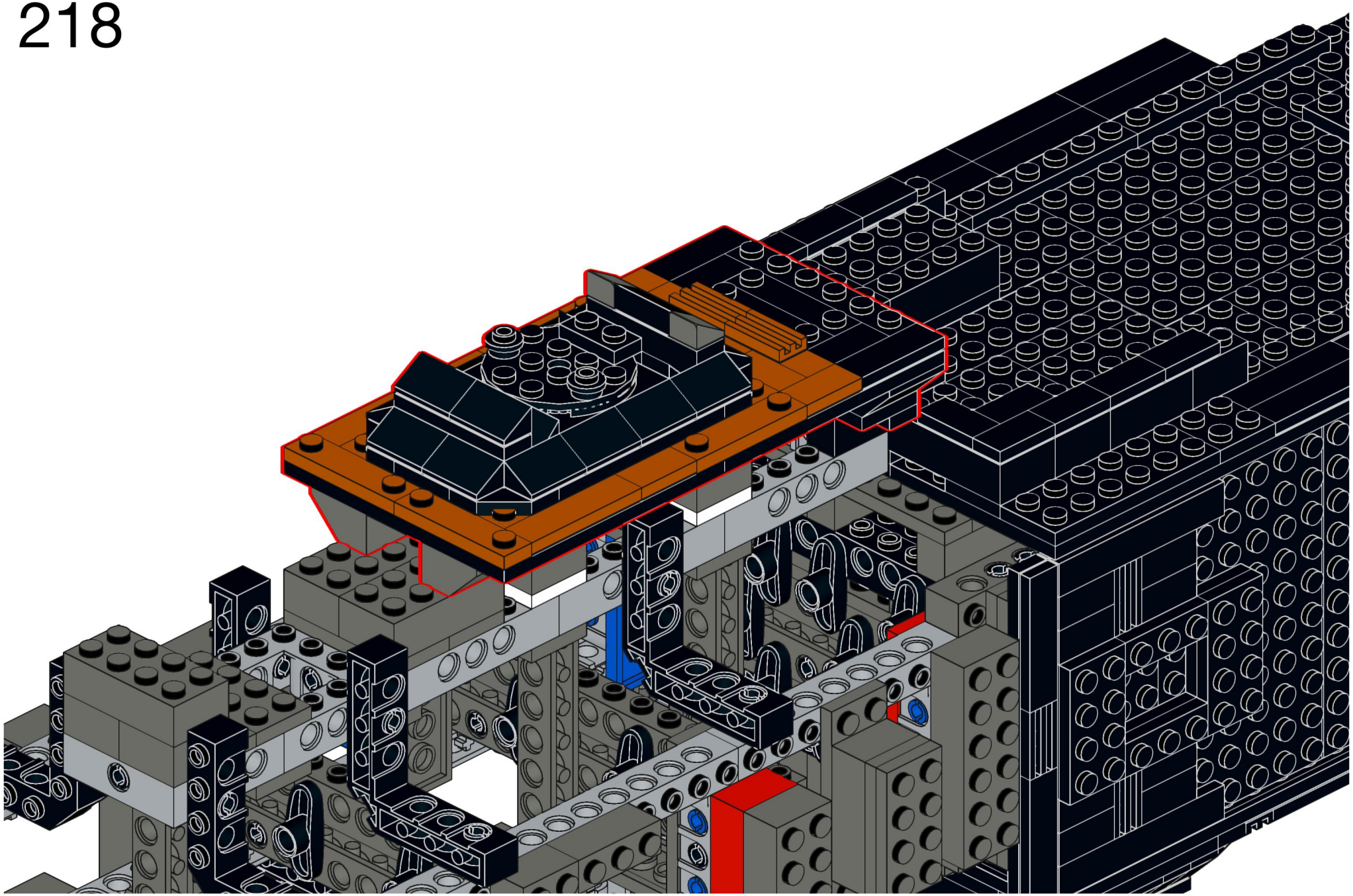

219

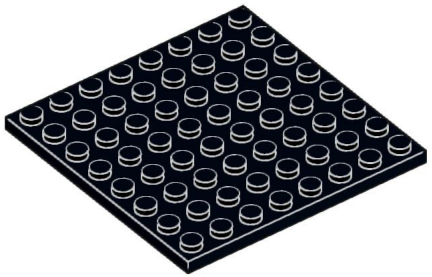

2x

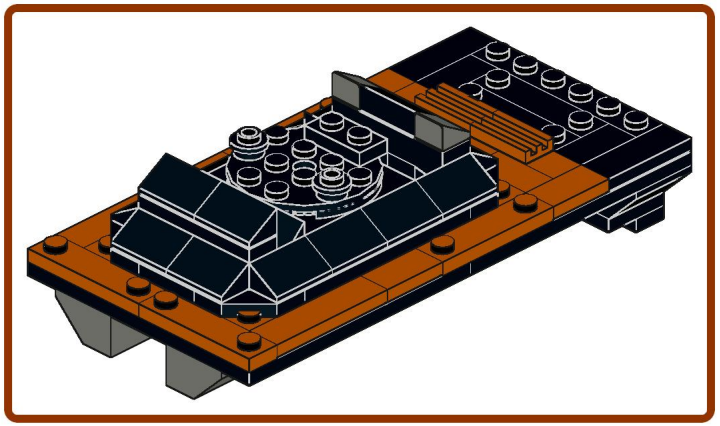

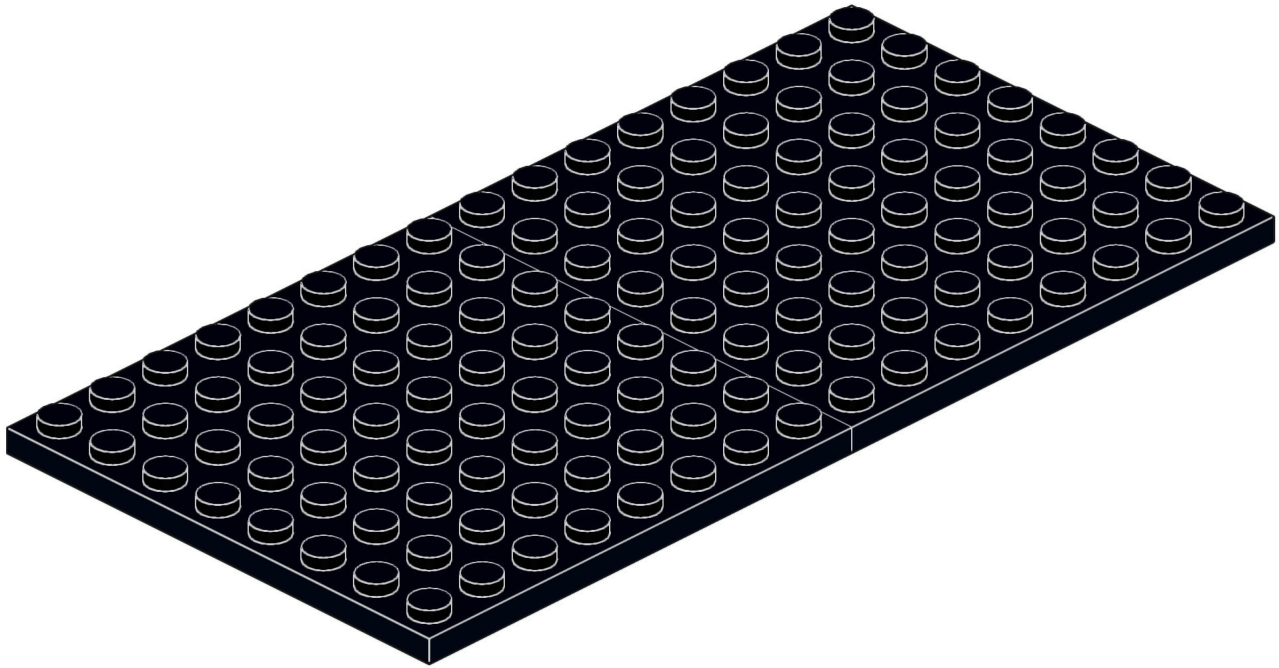

Designed by Michael Gertsch

220

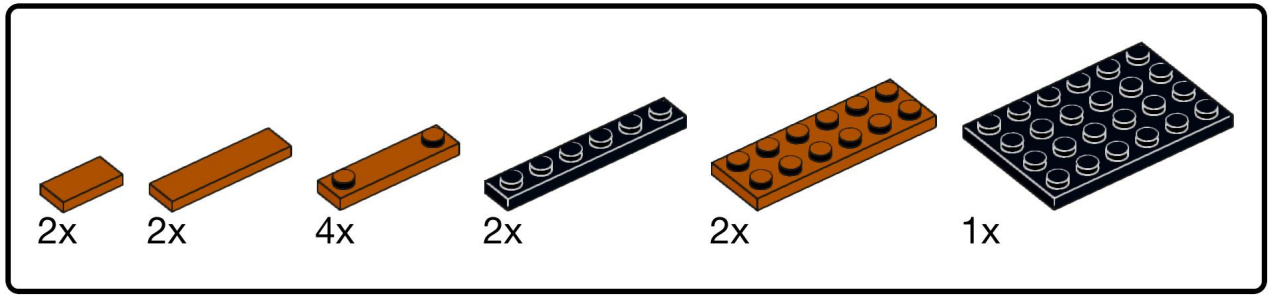

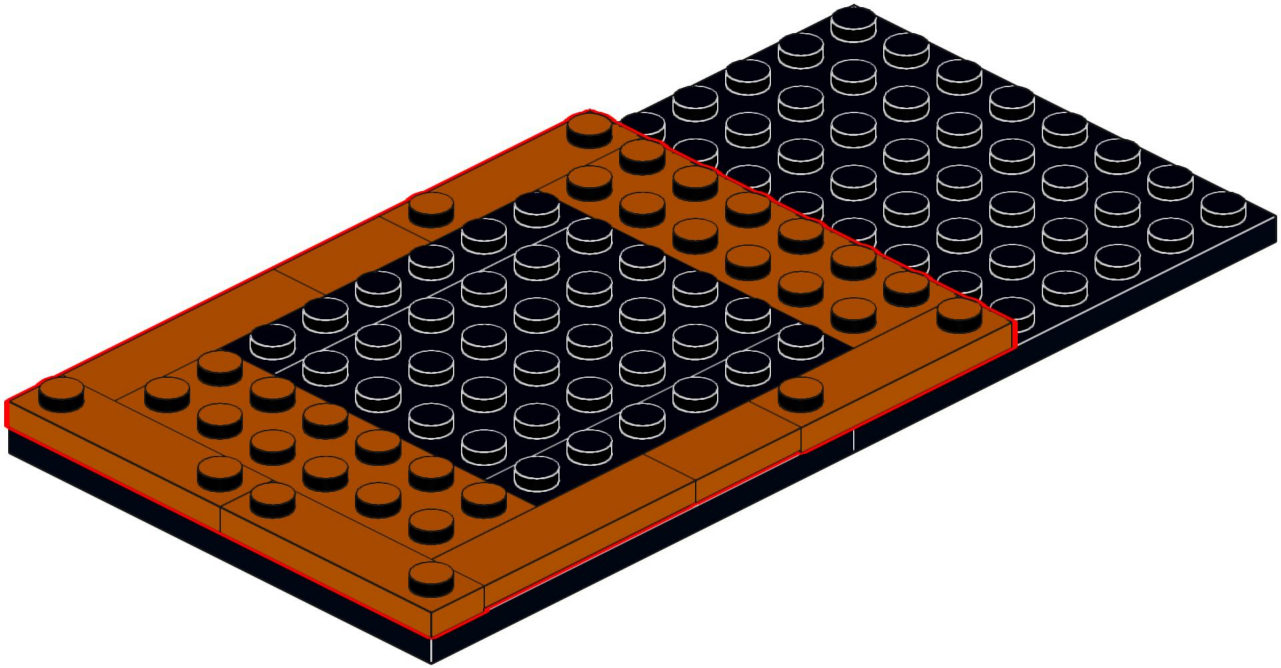

Designed by Michael Gertsch

221

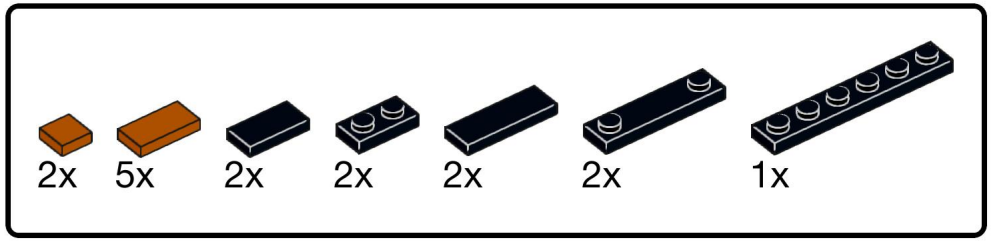

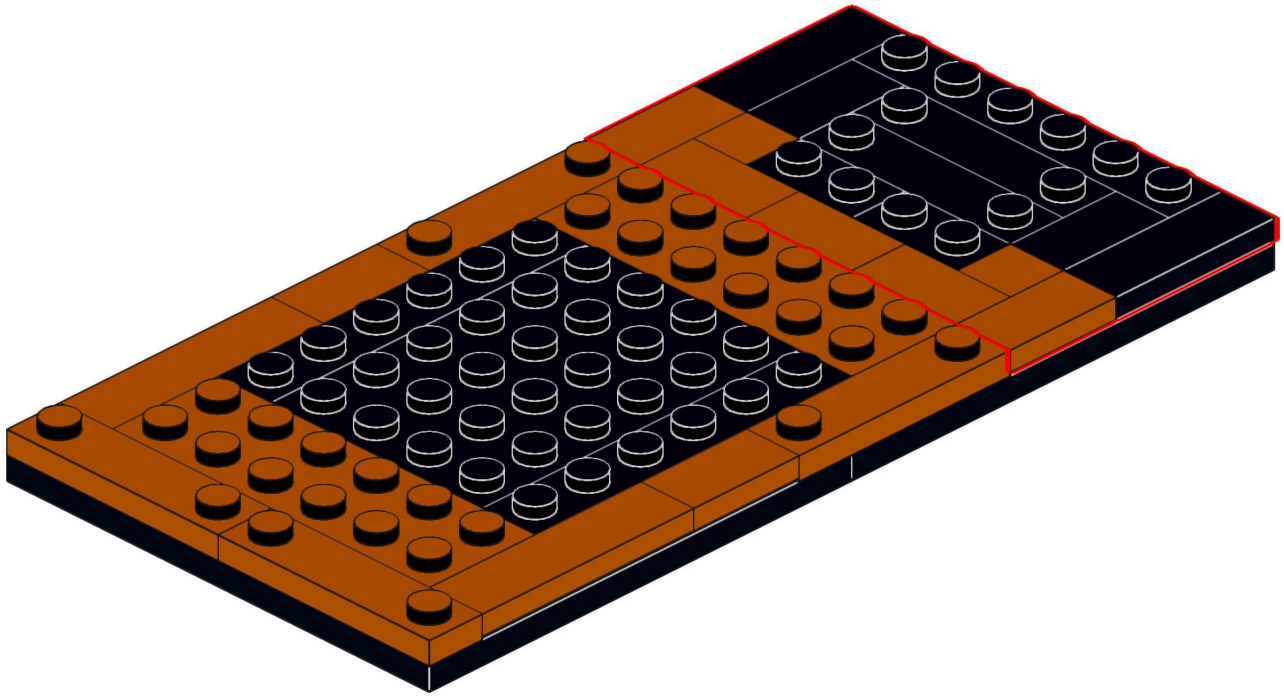

Designed by Michael Gertsch

222

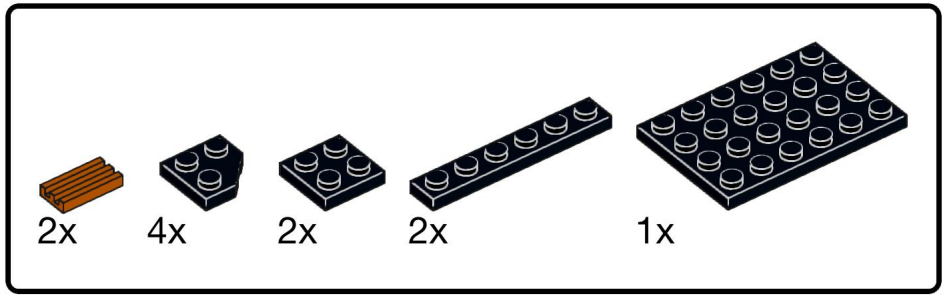

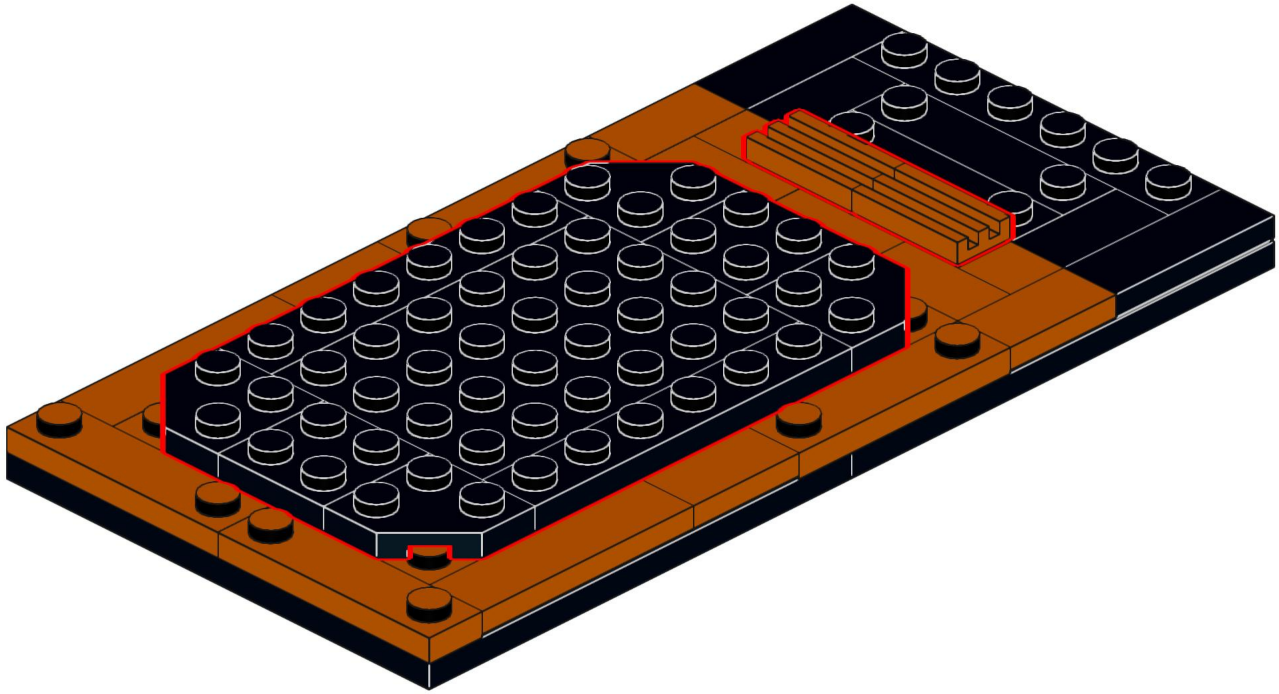

Designed by Michael Gertsch

223

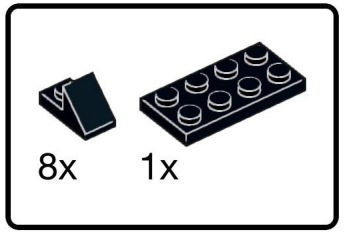

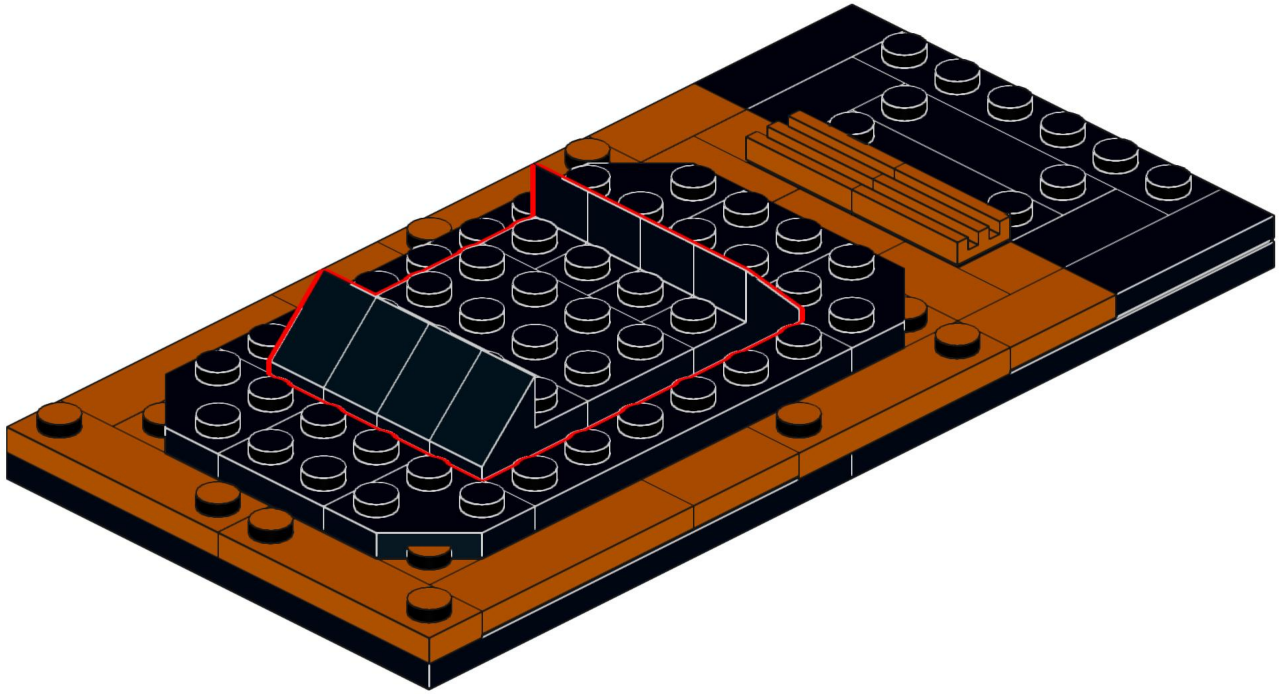

Designed by Michael Gertsch

224

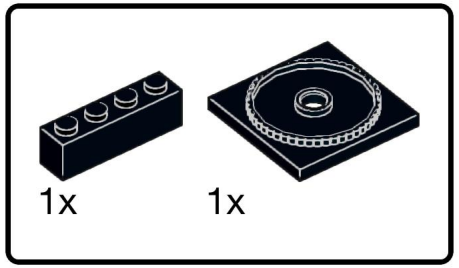

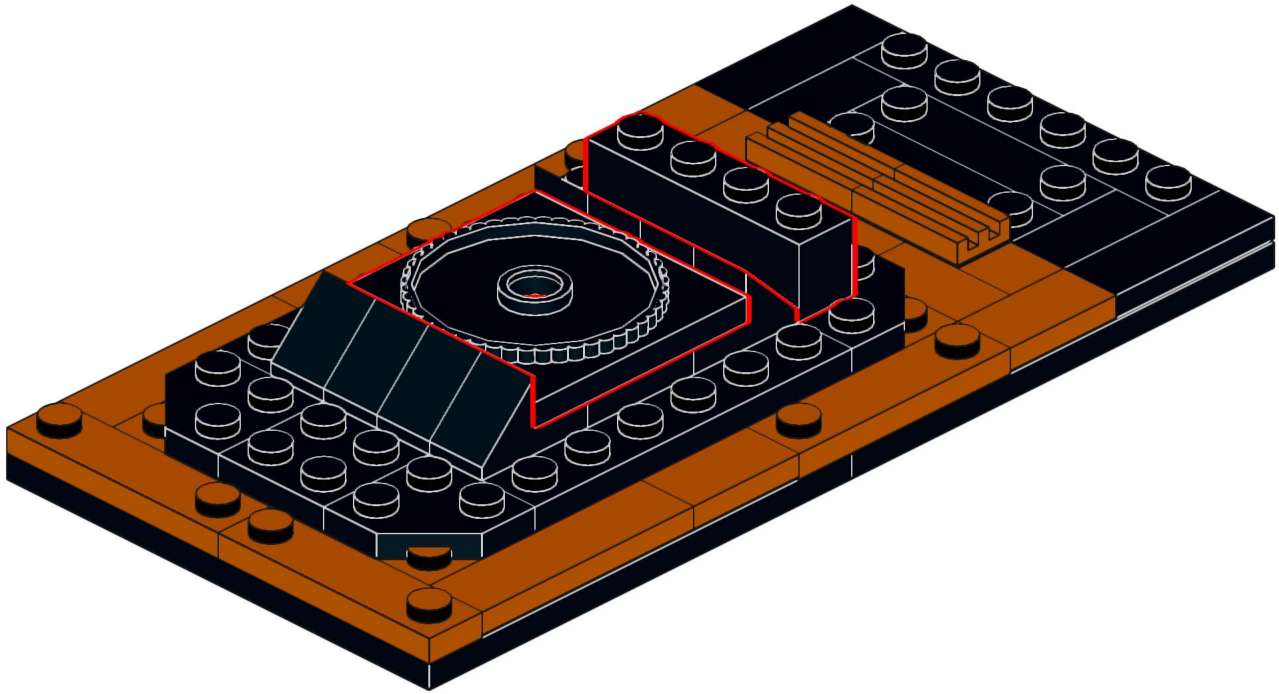

Designed by Michael Gertsch

225

6x

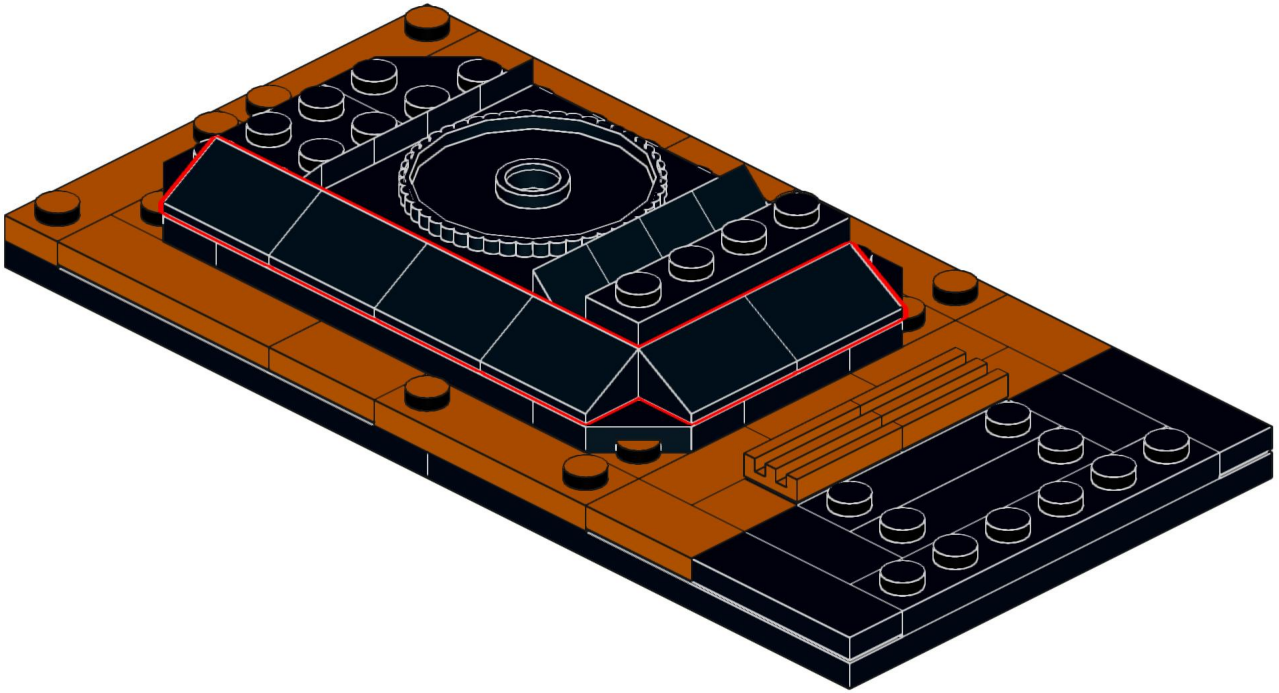

Designed by Michael Gertsch

226

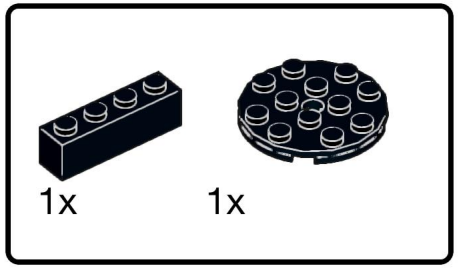

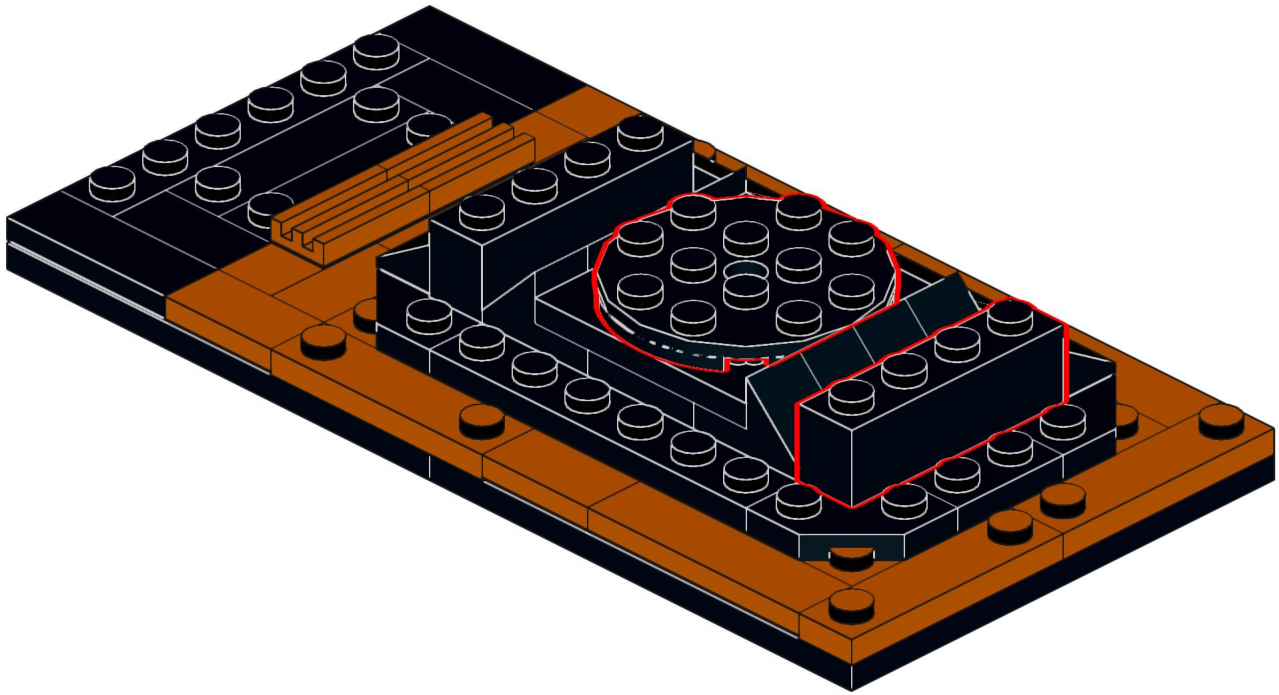

Designed by Michael Gertsch

227

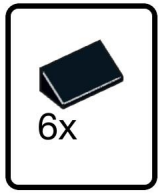

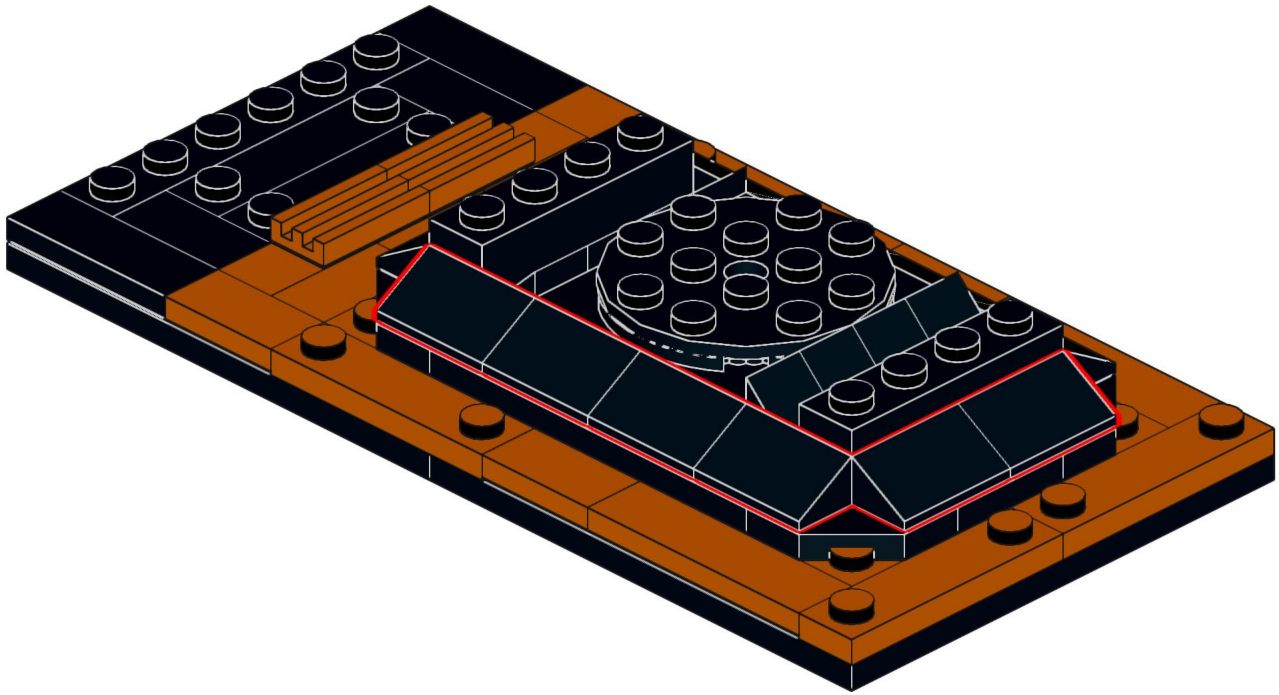

Designed by Michael Gertsch

228

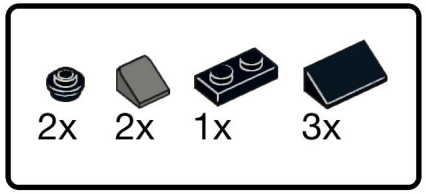

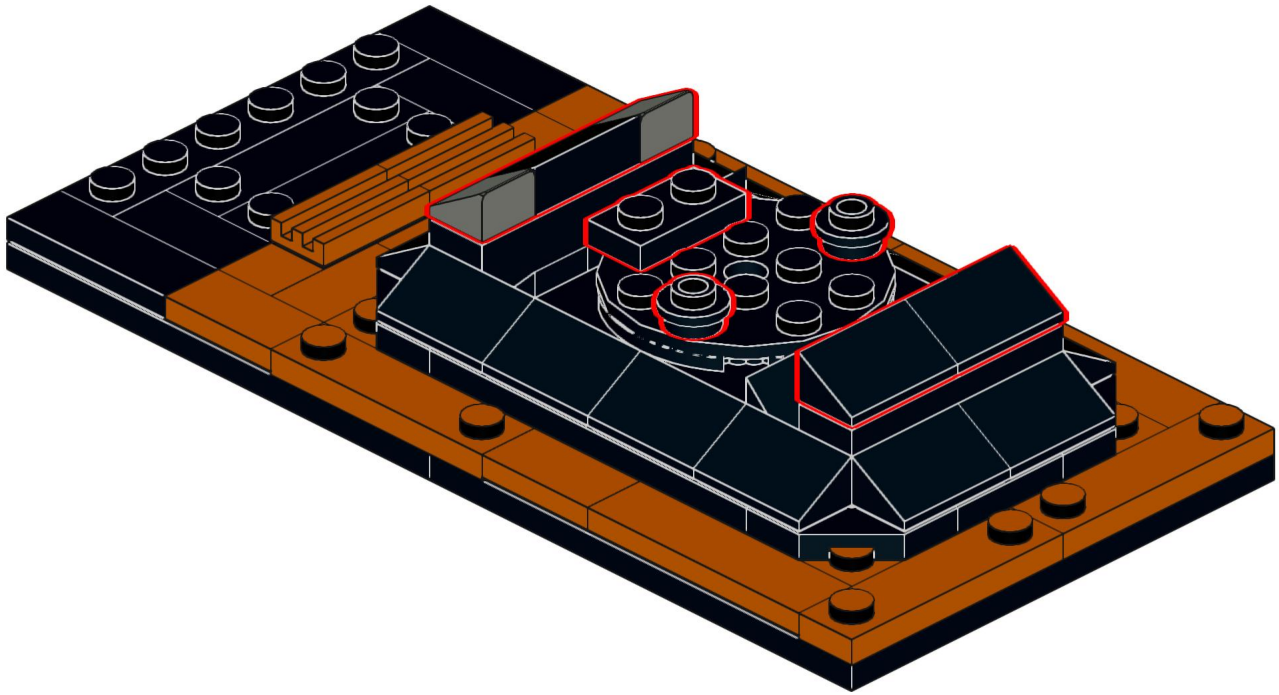

Designed by Michael Gertsch

229

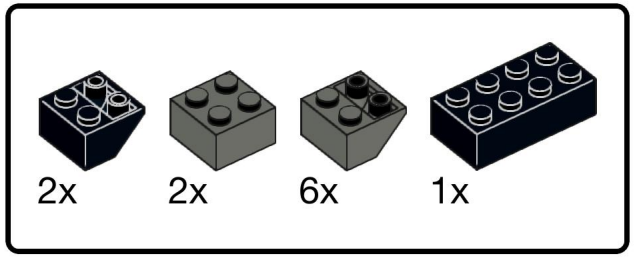

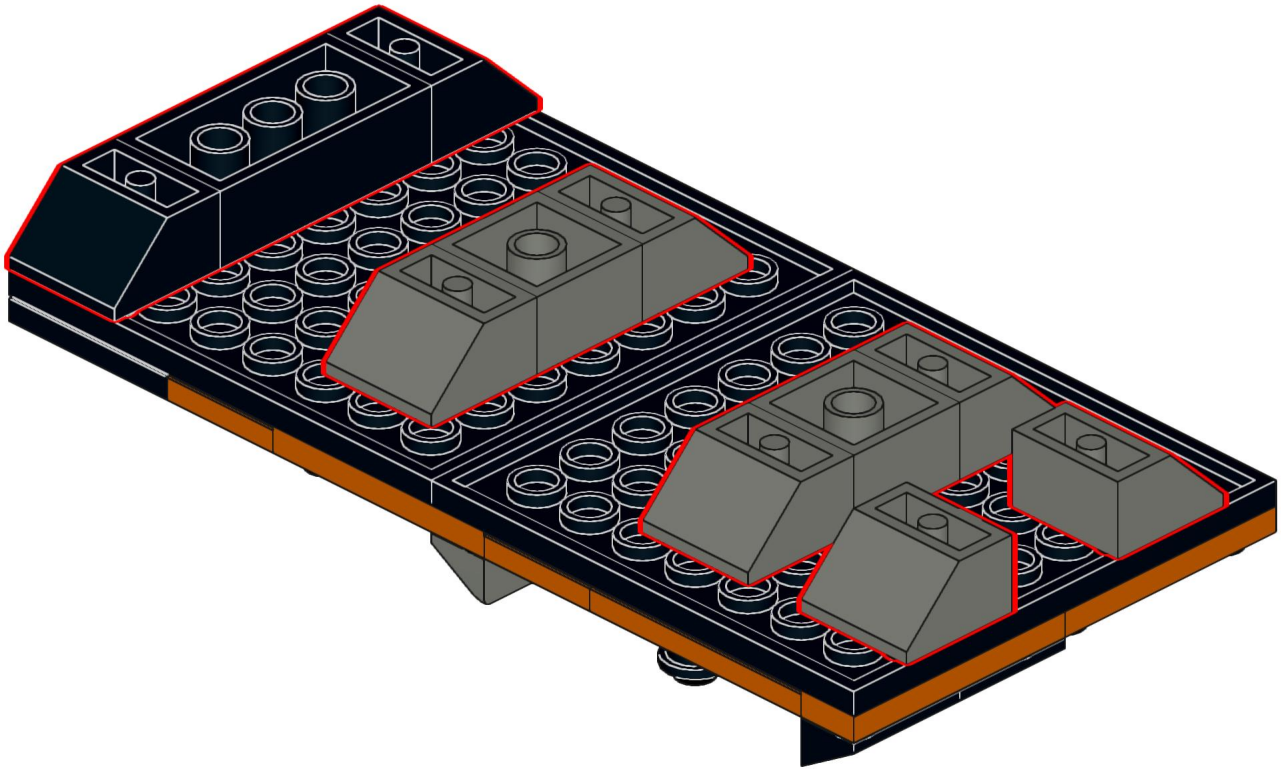

Designed by Michael Gertsch

230

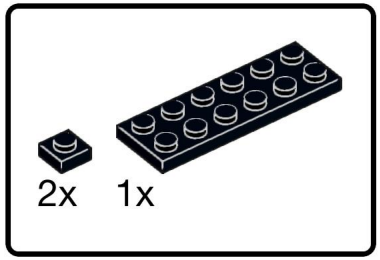

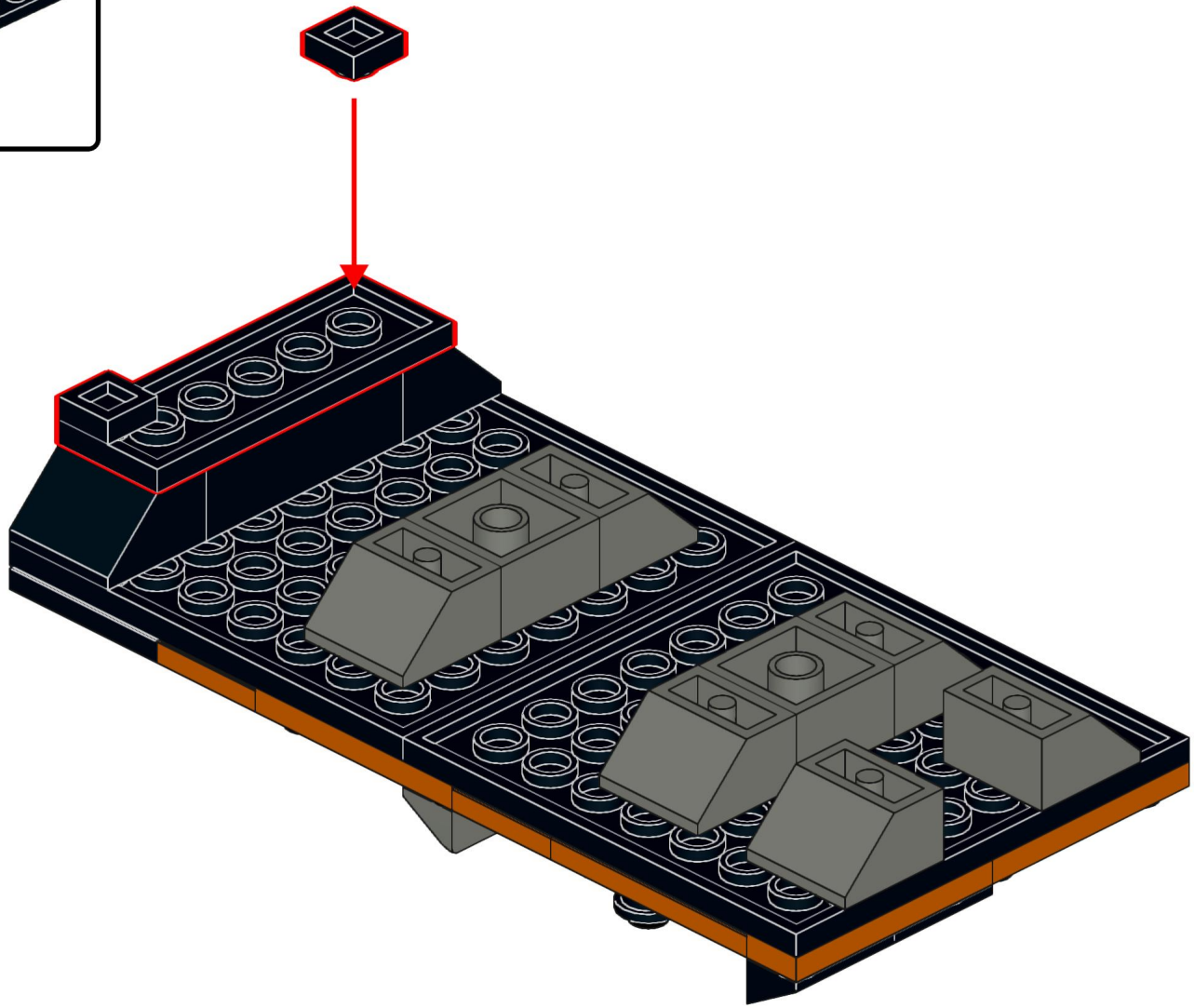

Designed by Michael Gertsch

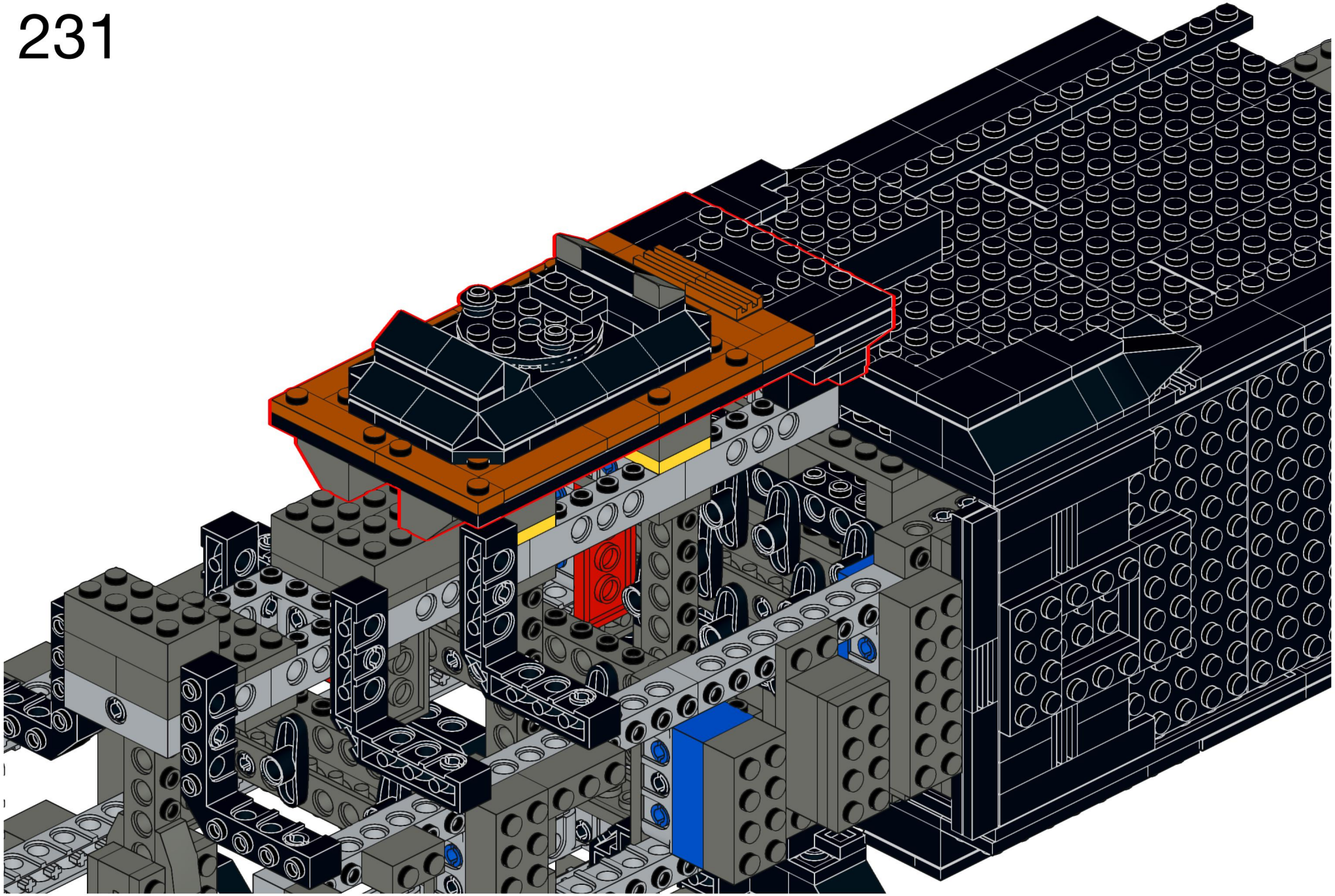

Designed by Michael Gertsch

232

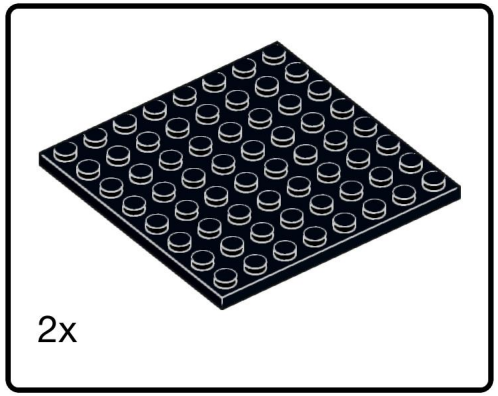

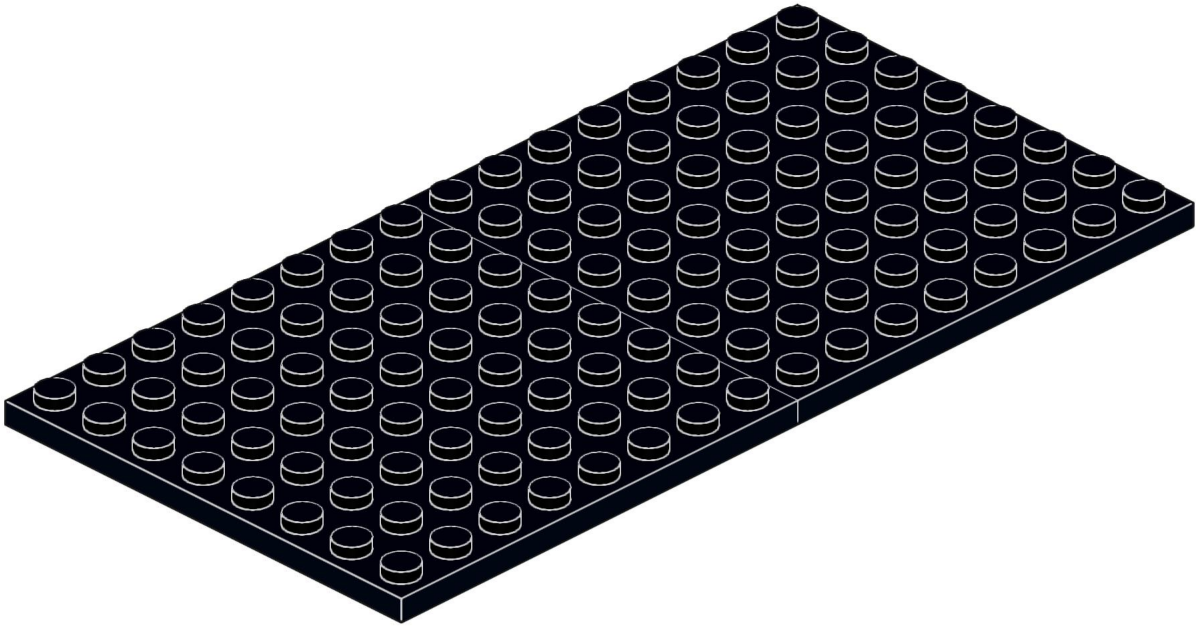

233

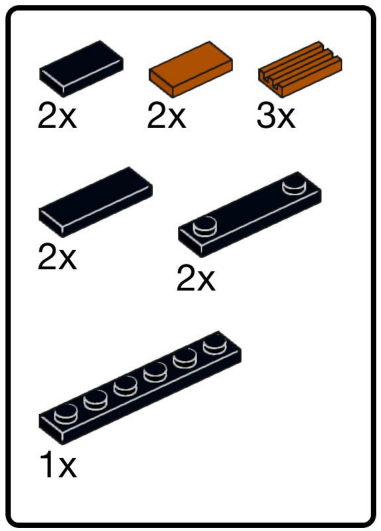

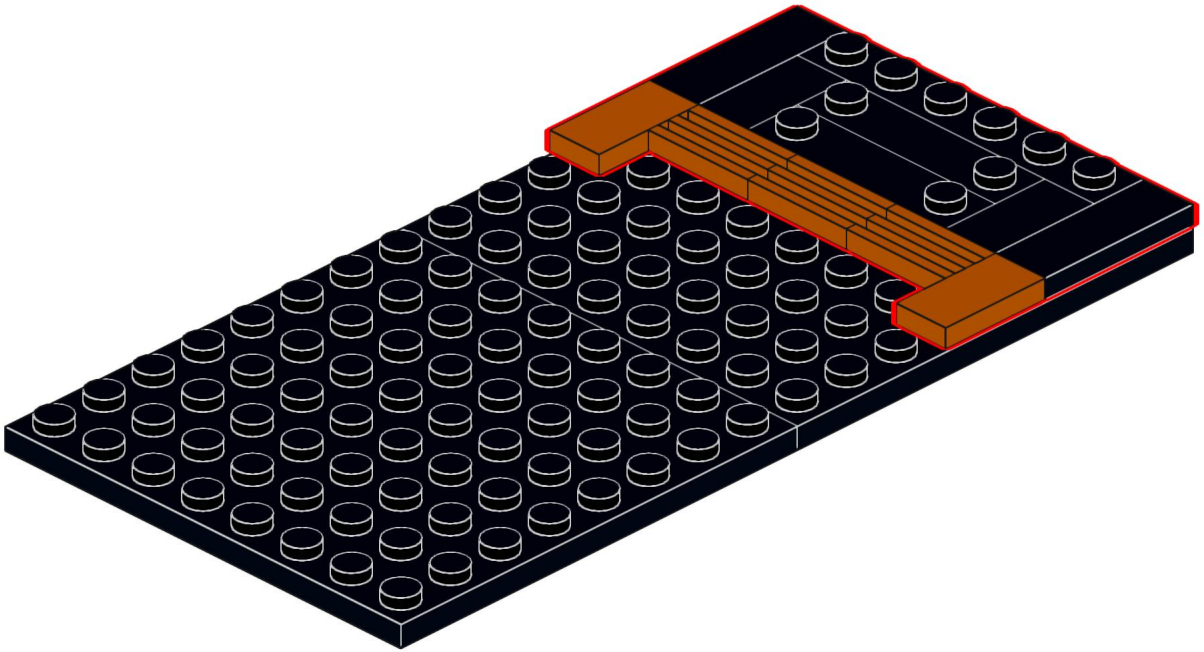

Designed by Michael Gertsch

234

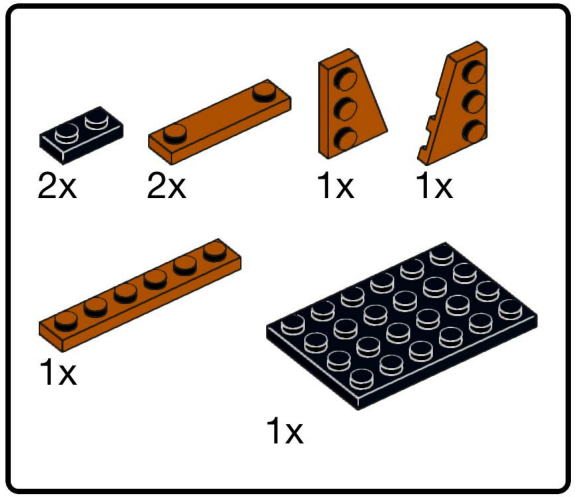

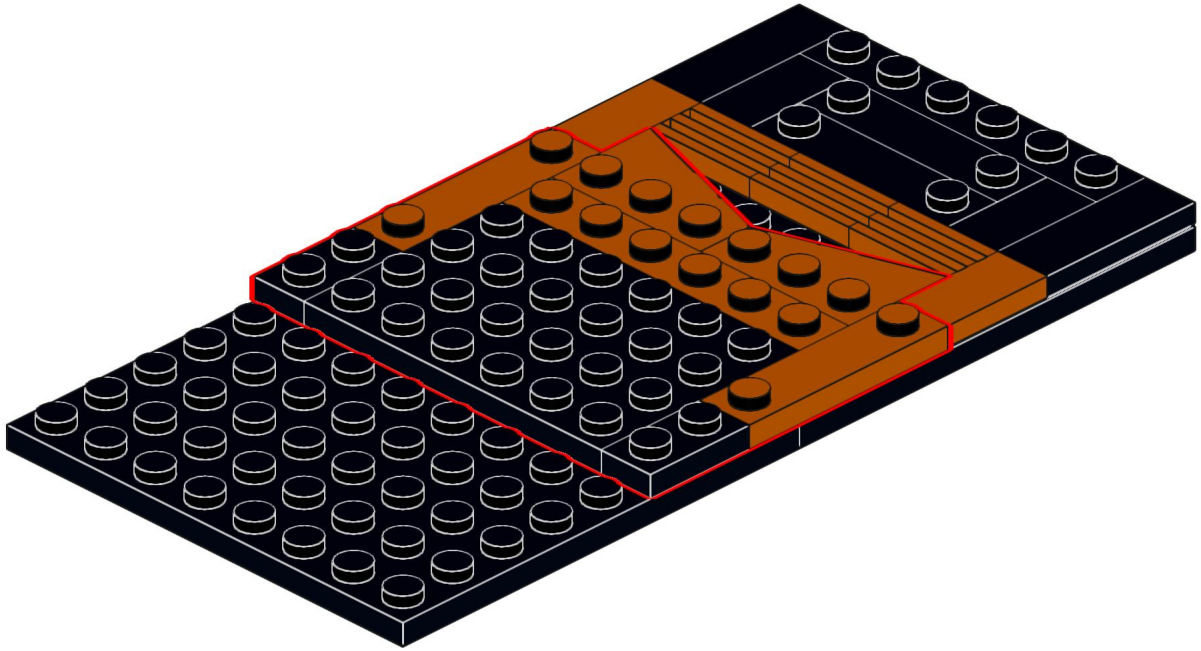

235

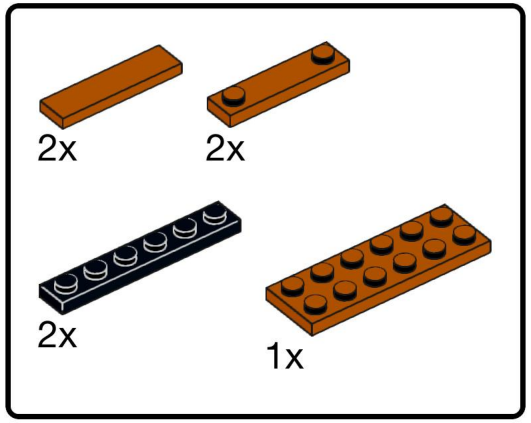

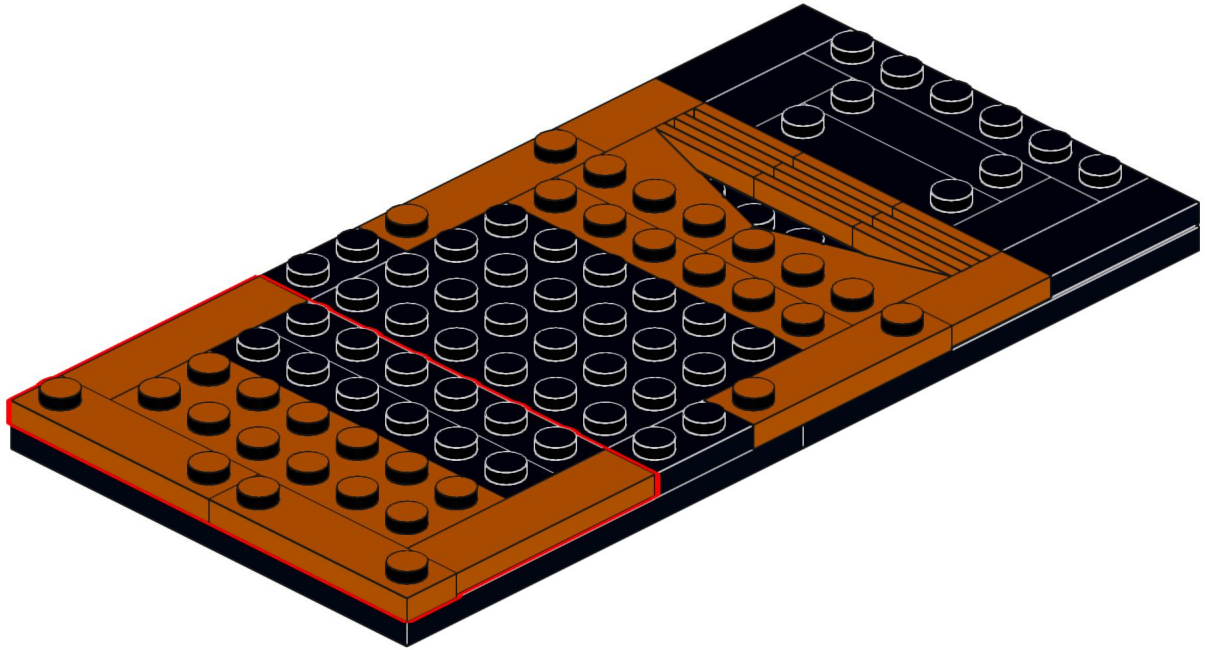

Designed by Michael Gertsch

236

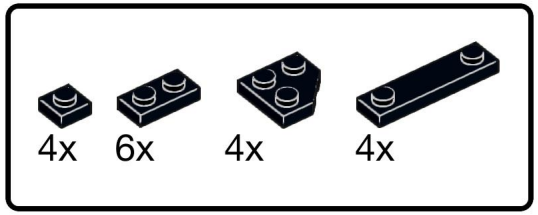

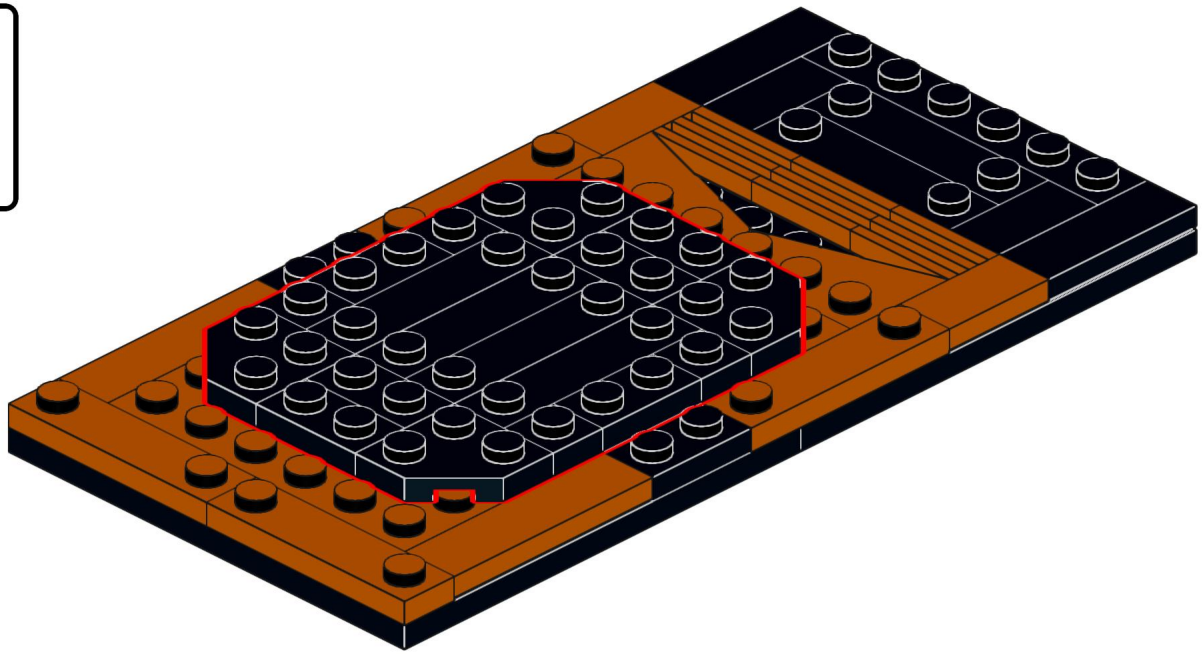

237

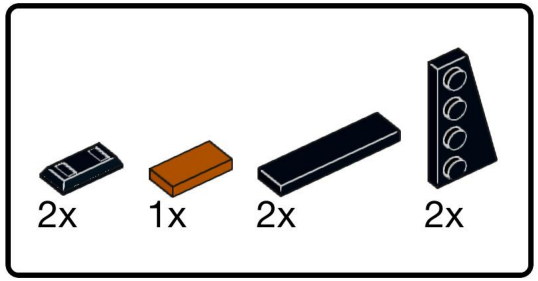

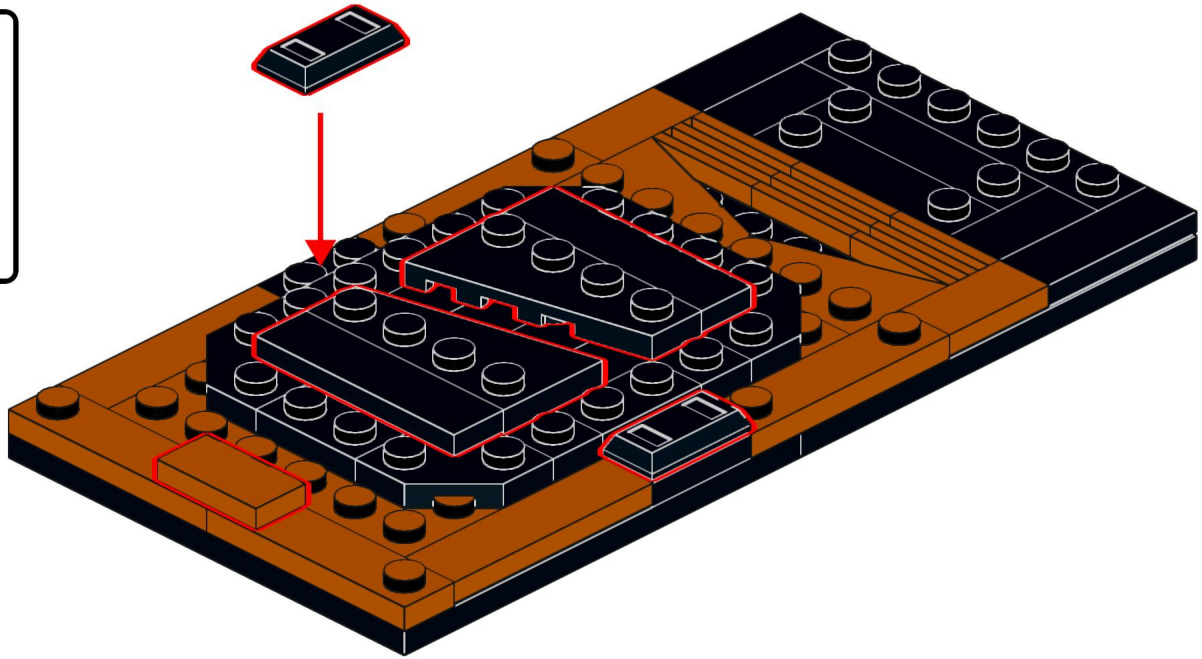

Designed by Michael Gertsch

238

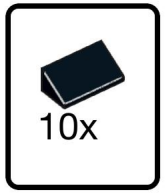

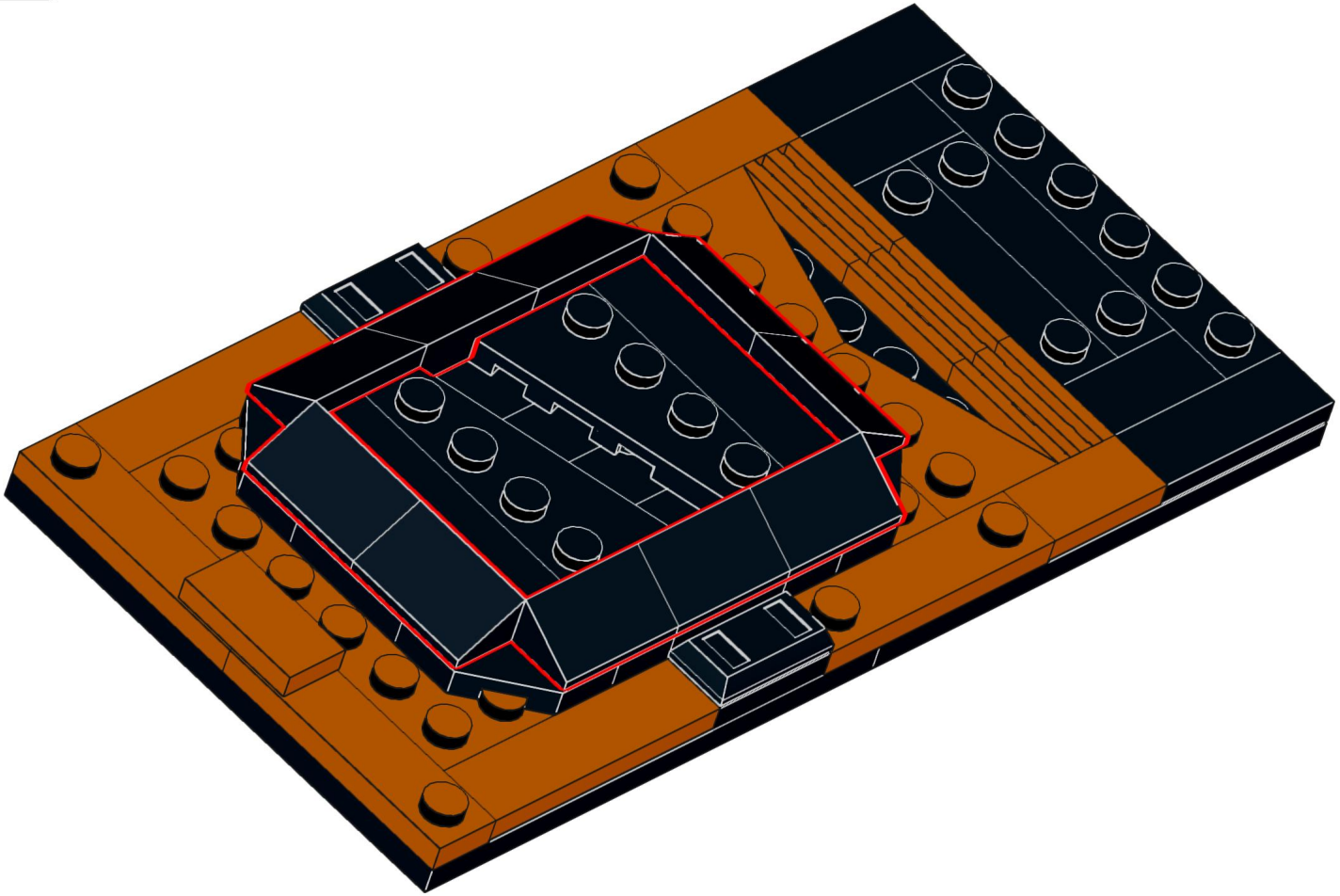

Designed by Michael Gertsch

239

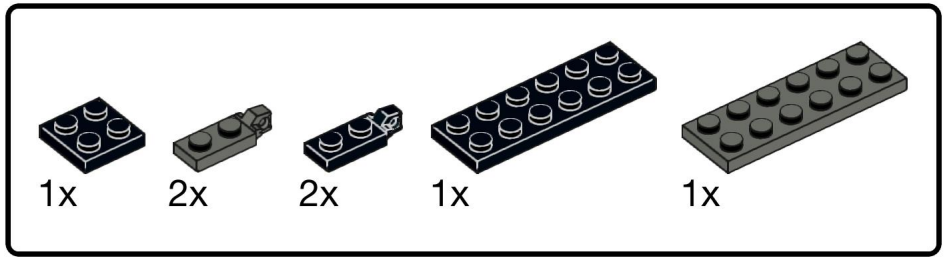

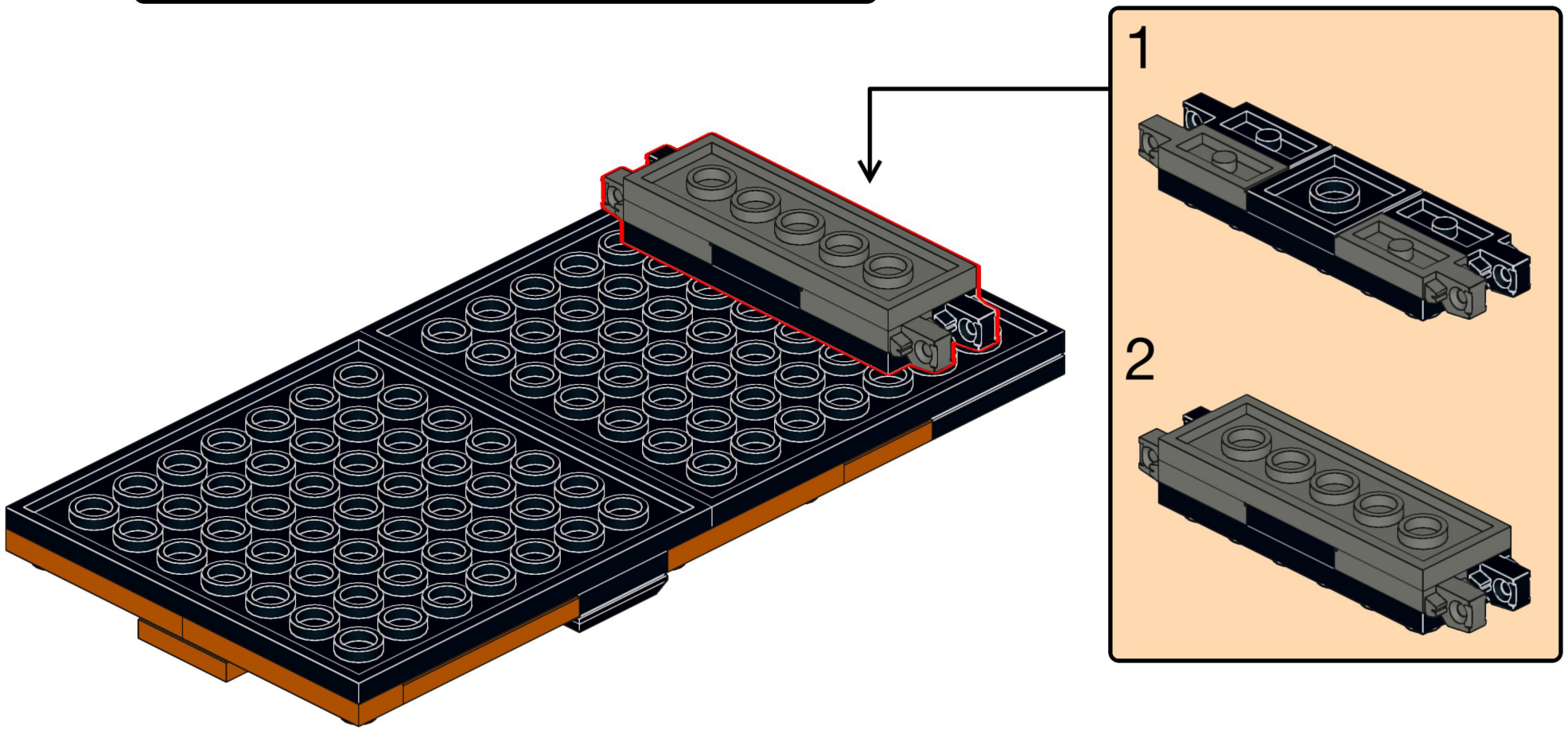

Designed by Michael Gertsch

240

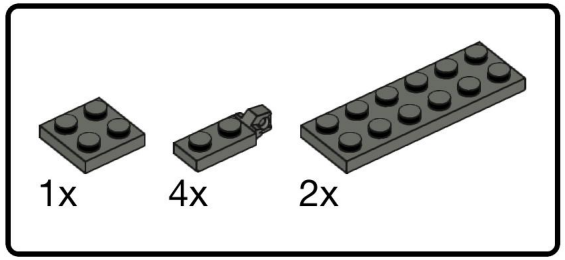

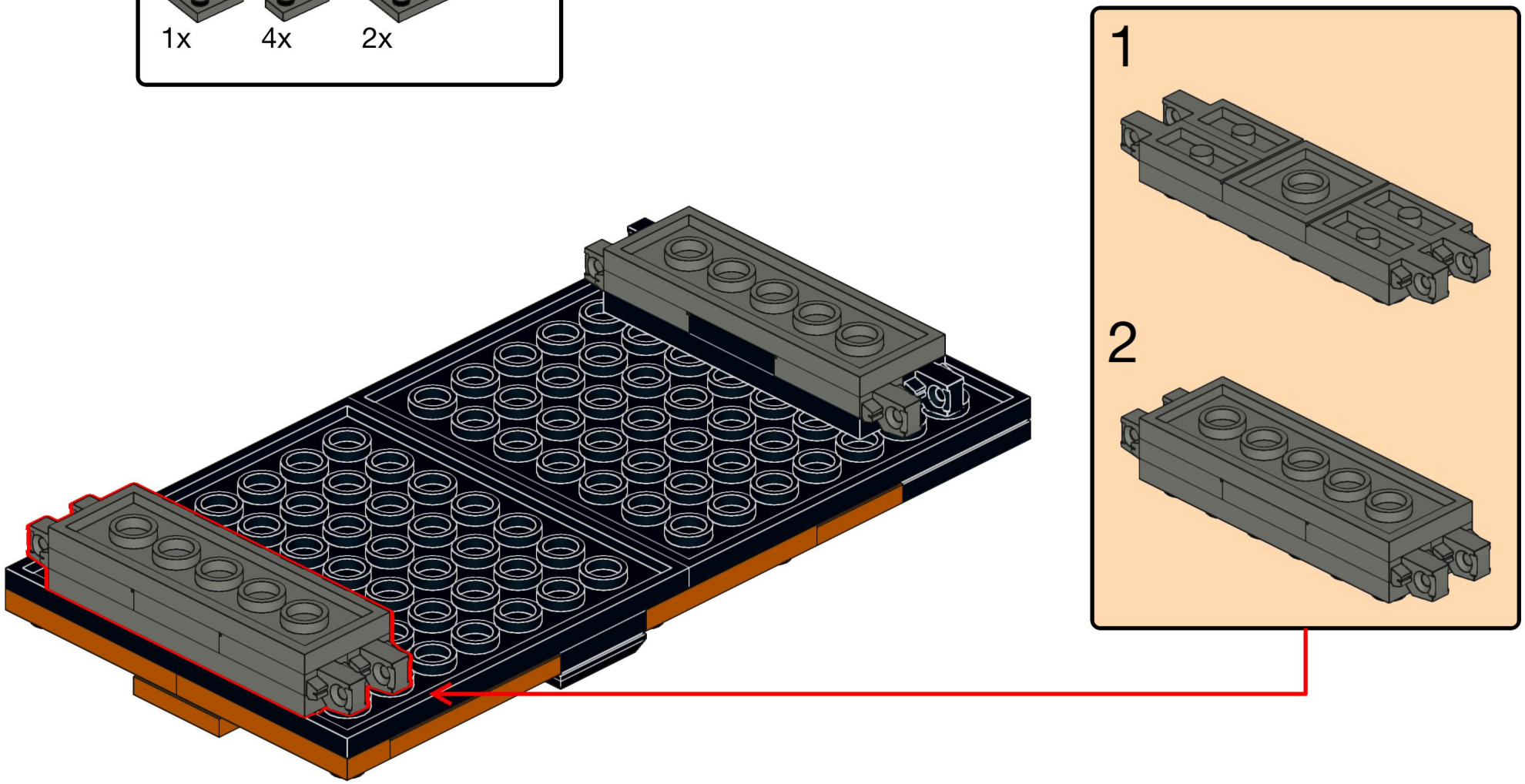

Designed by Michael Gertsch

241

1x

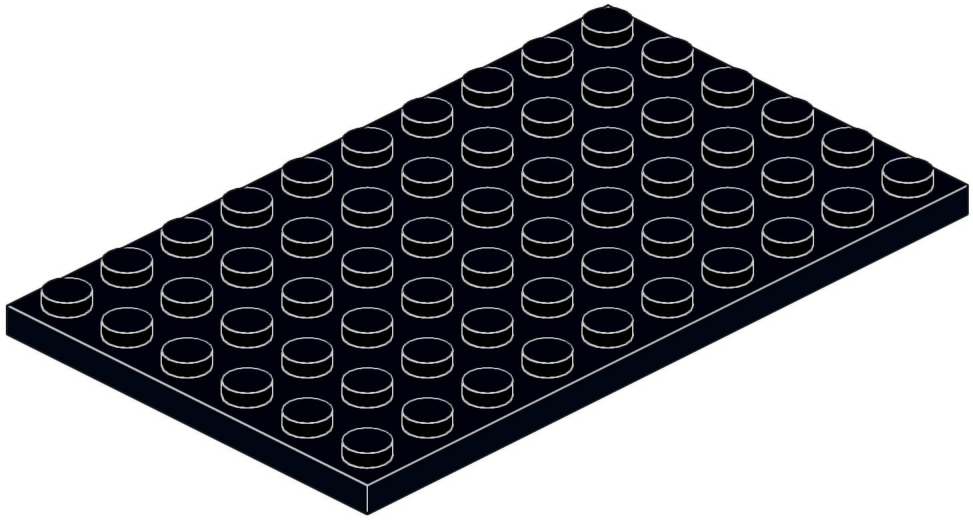

Designed by Michael Gertsch

242

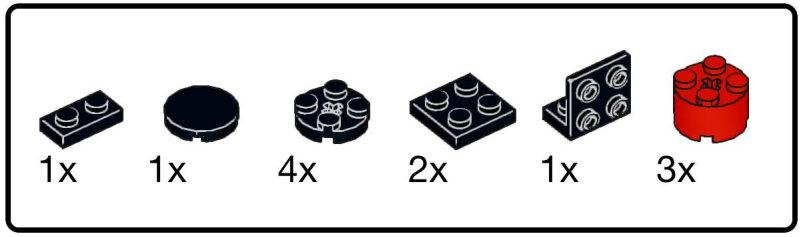

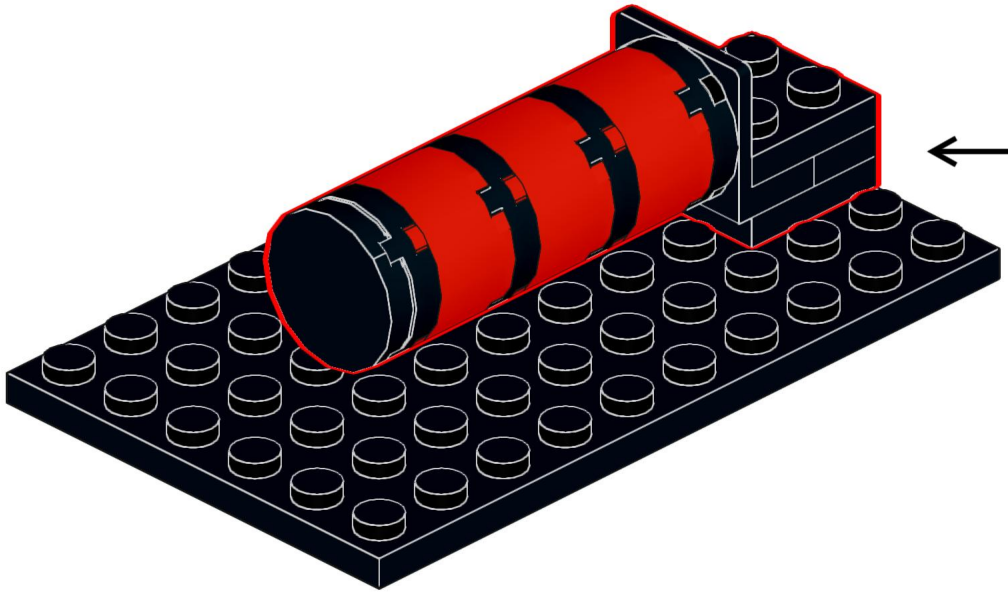

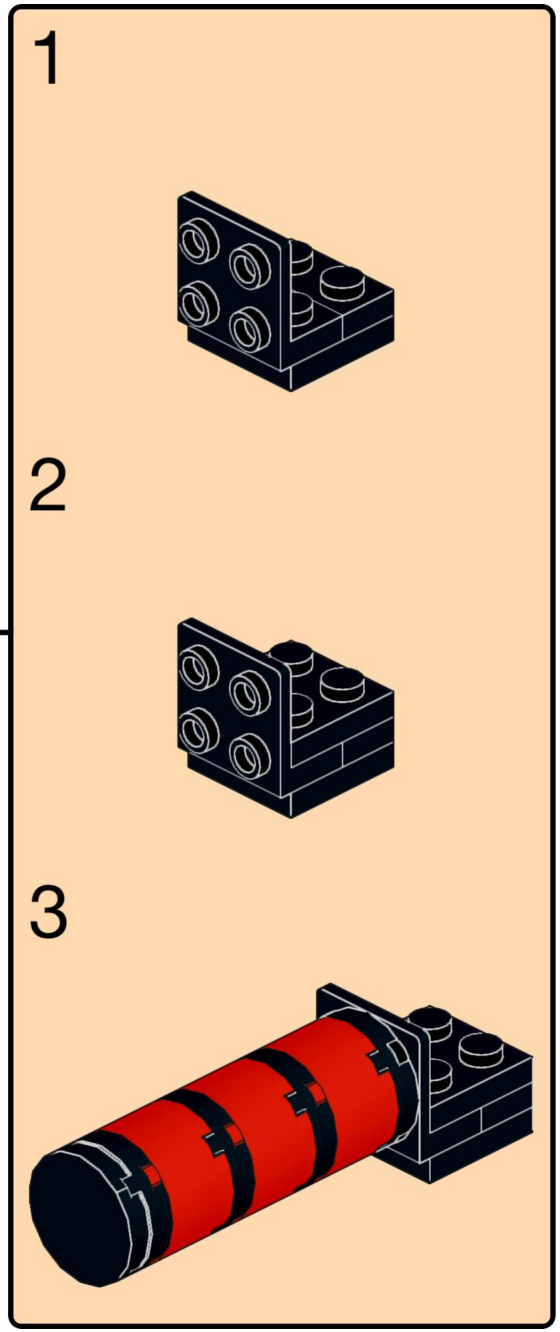

Designed by Michael Gertsch

243

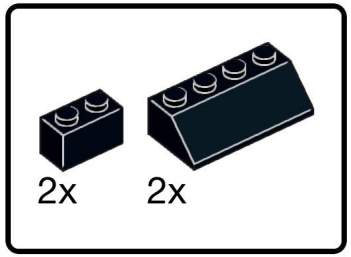

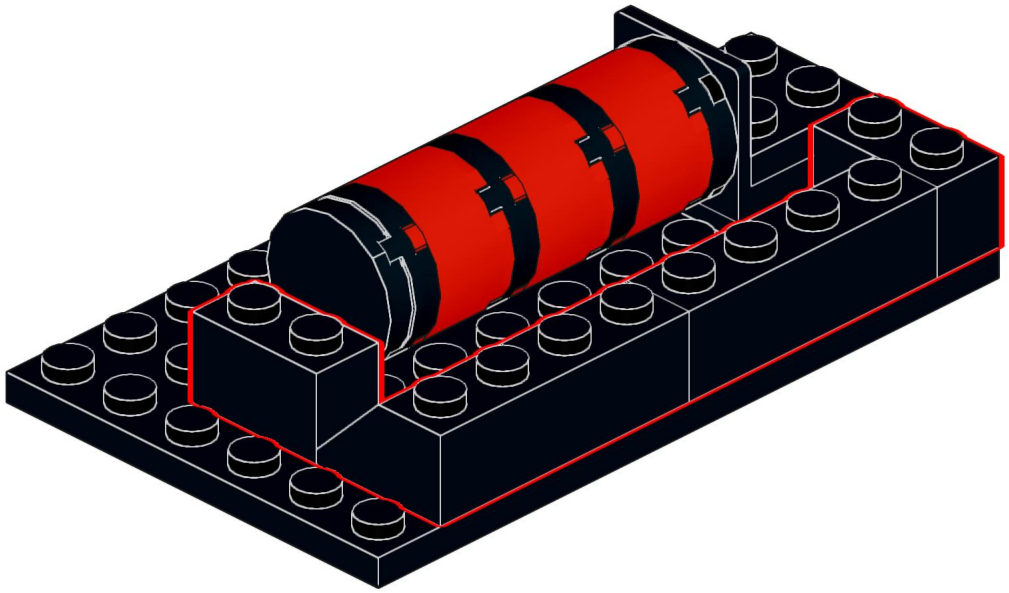

244

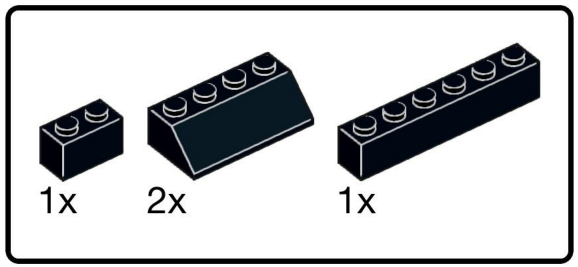

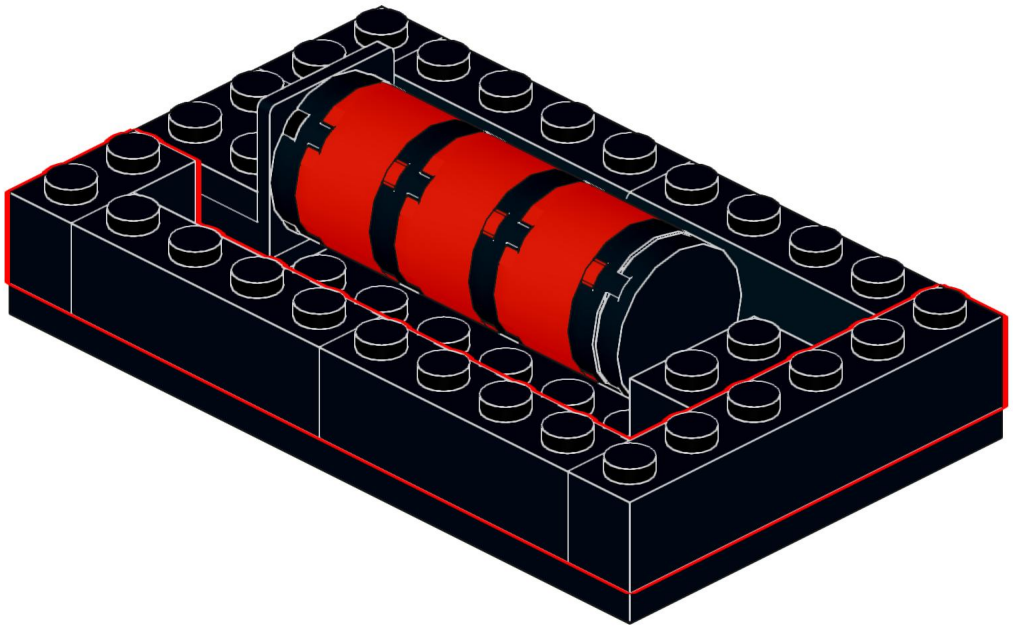

Designed by Michael Gertsch

245

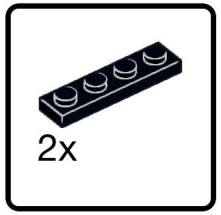

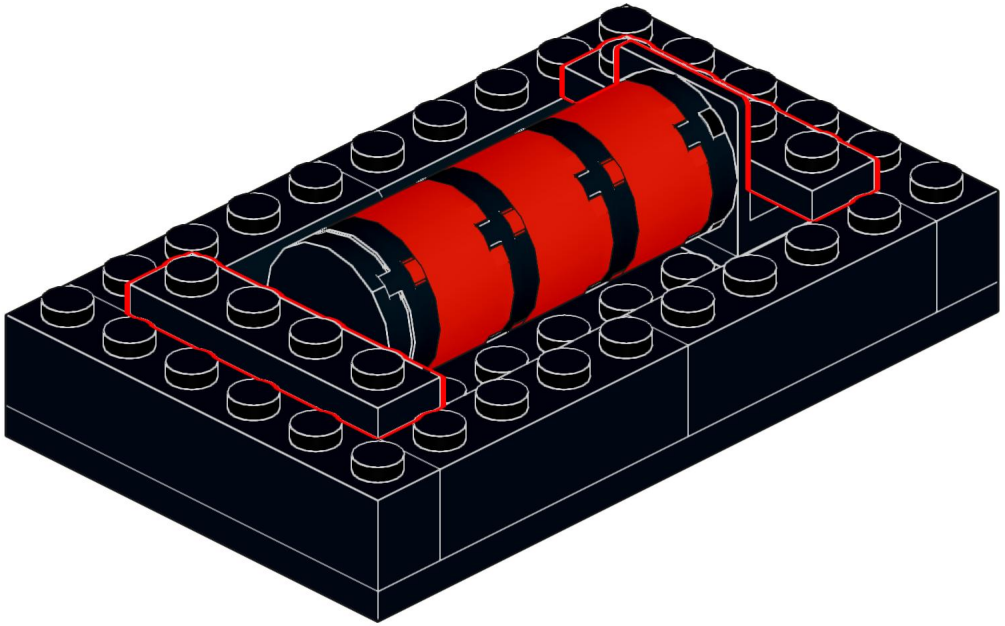

246

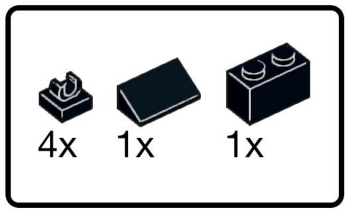

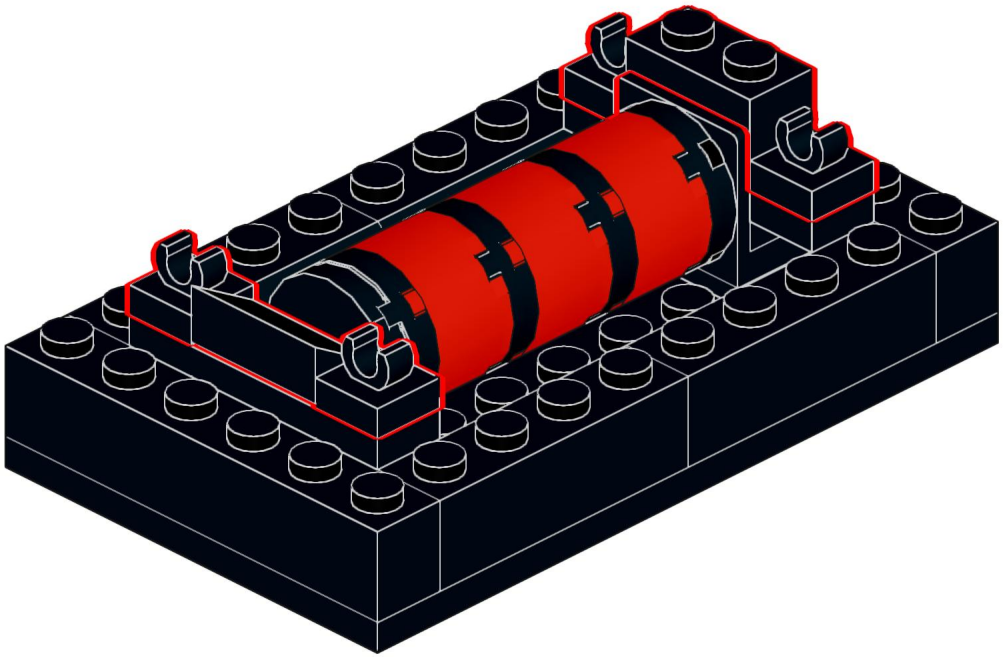

Designed by Michael Gertsch

247

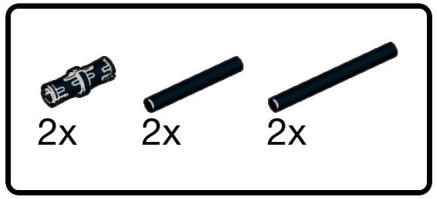

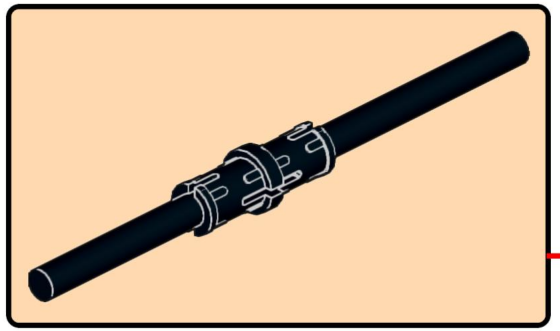

2x

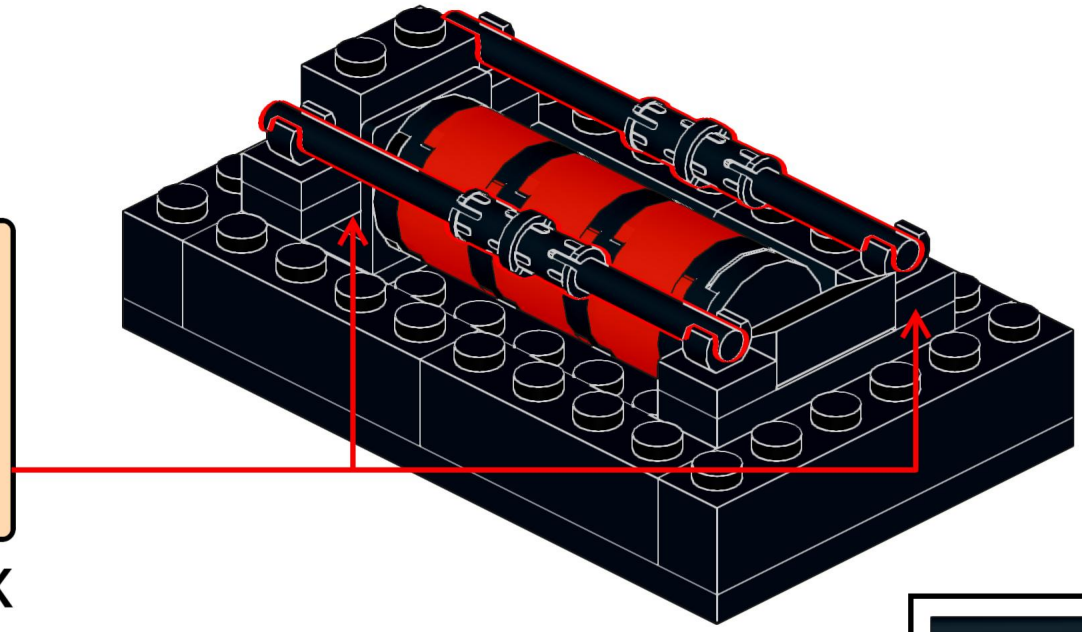

248

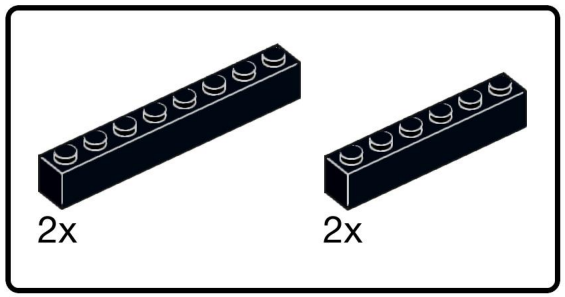

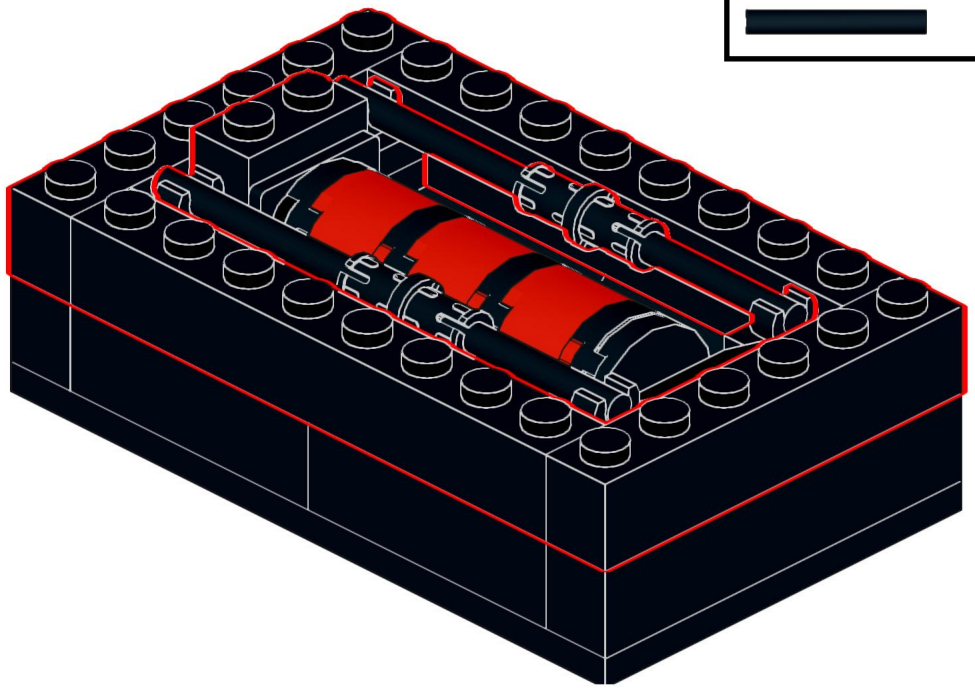

Designed by Michael Gertsch

249

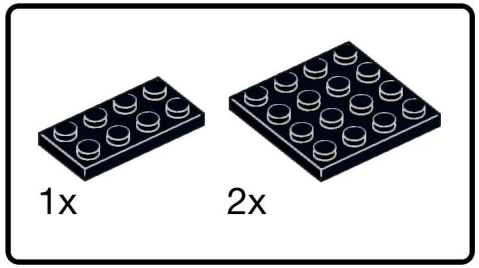

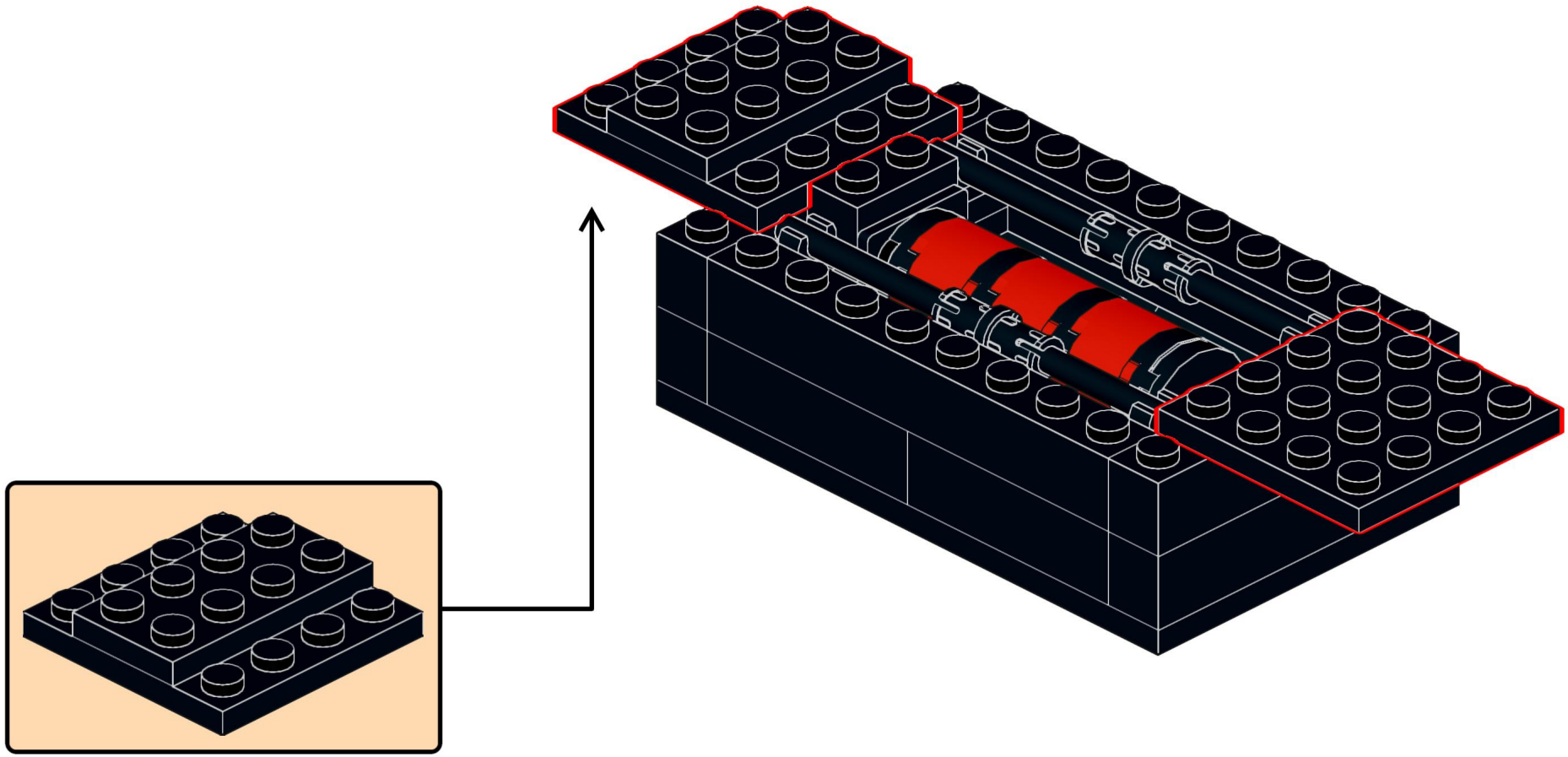

Designed by Michael Gertsch

250

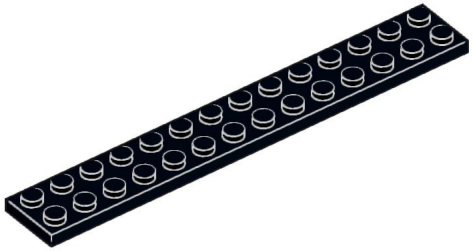

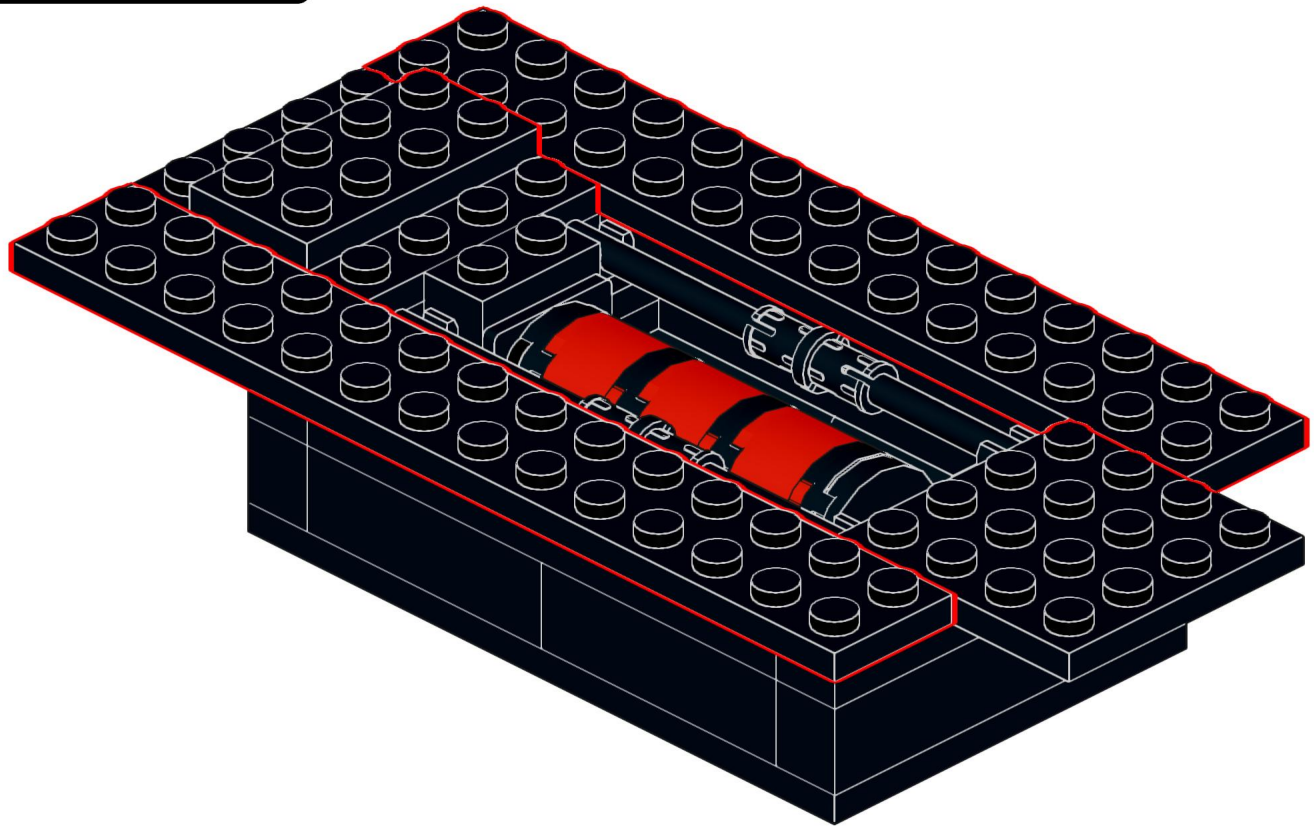

Designed by Michael Gertsch

251

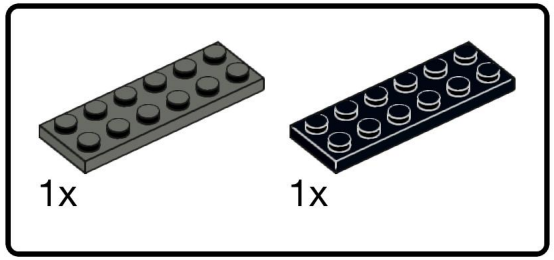

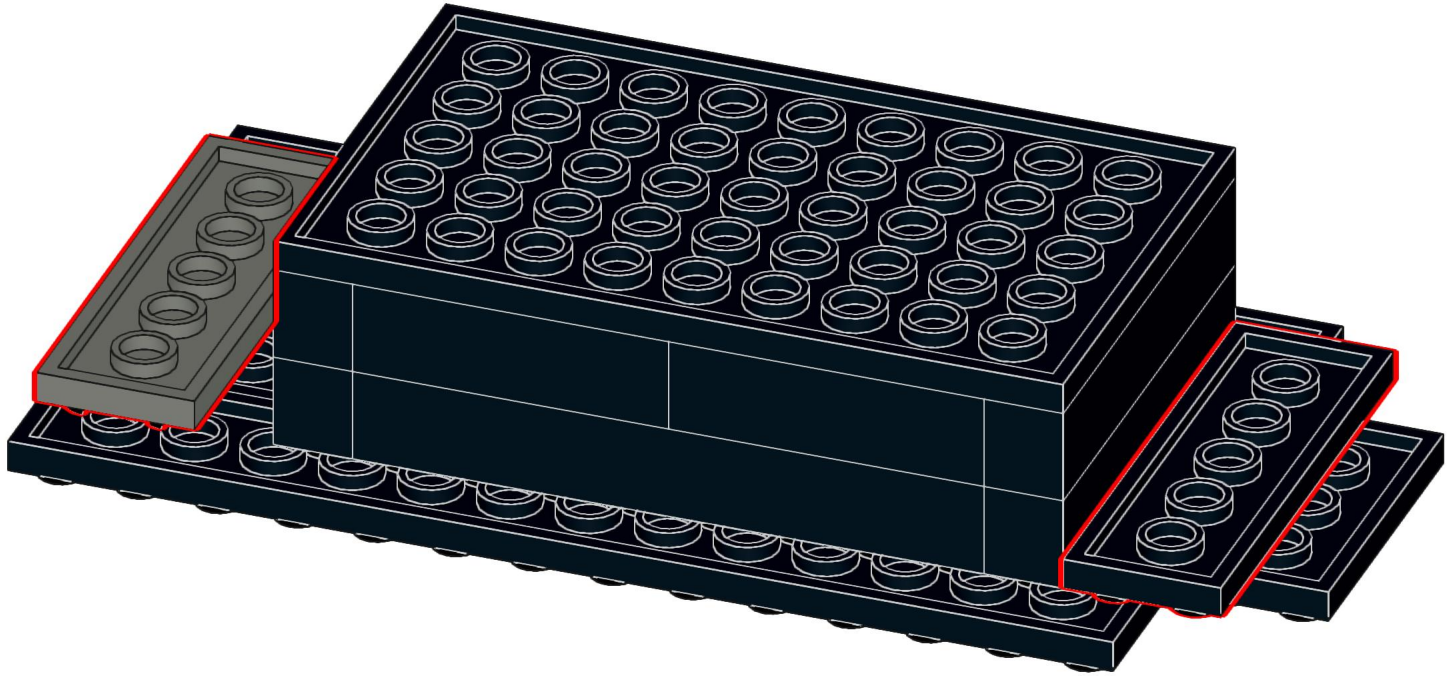

Designed by Michael Gertsch

252

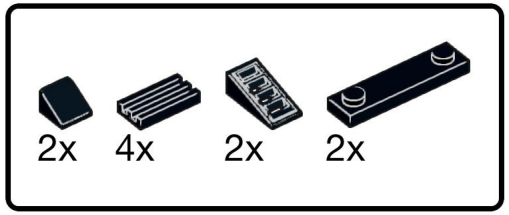

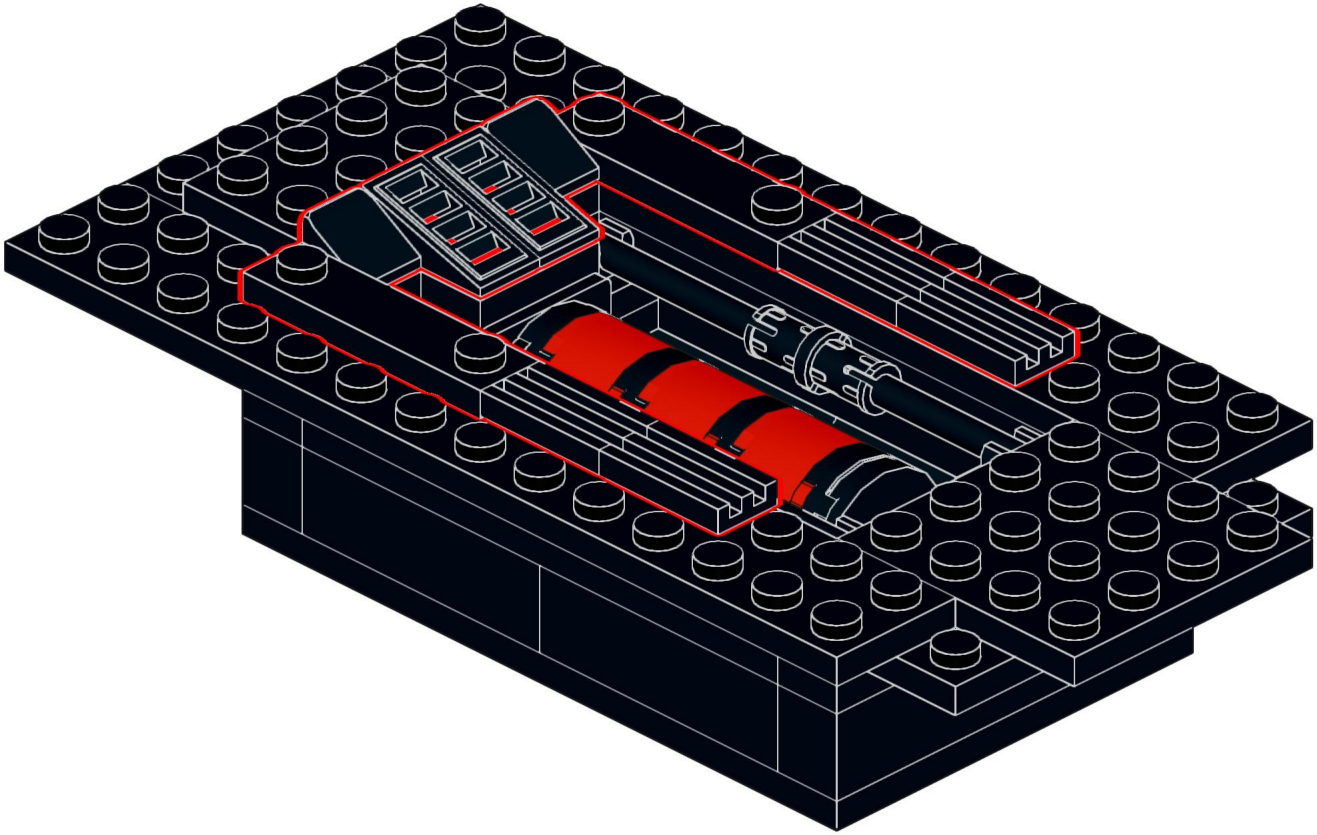

253

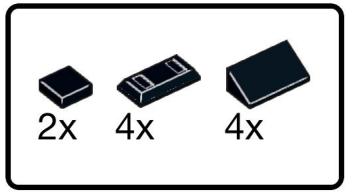

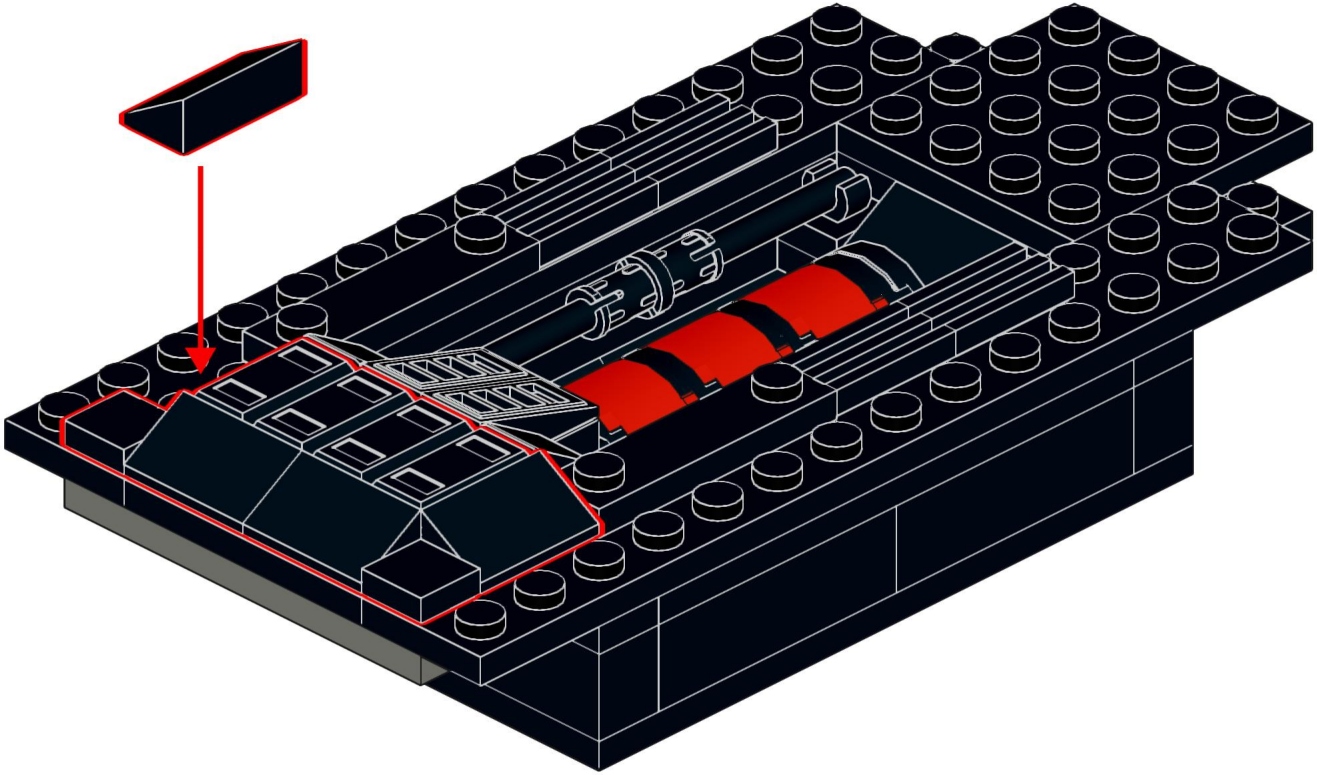

Designed by Michael Gertsch

254

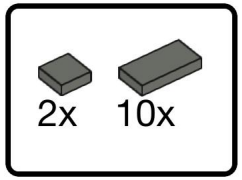

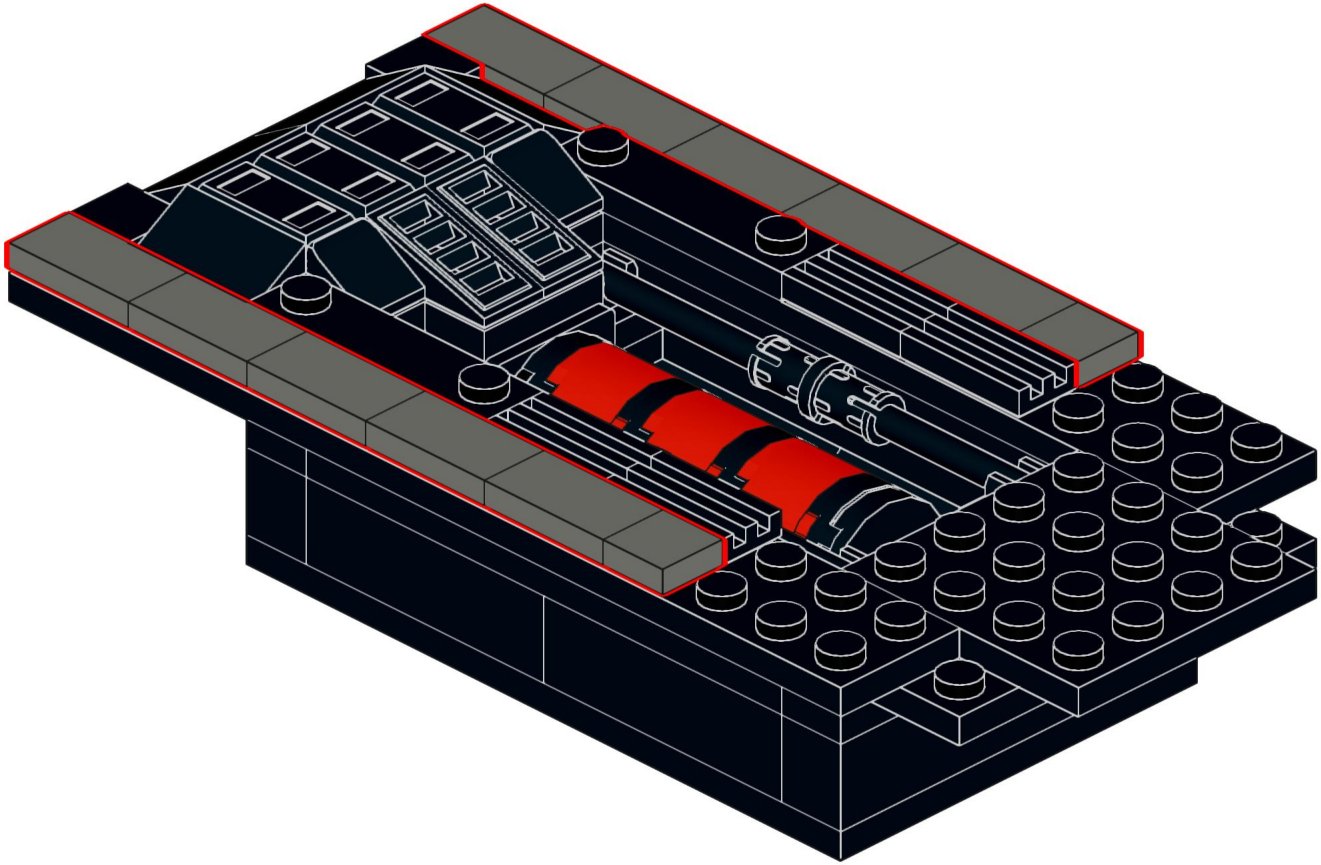

Designed by Michael Gertsch

255

2x

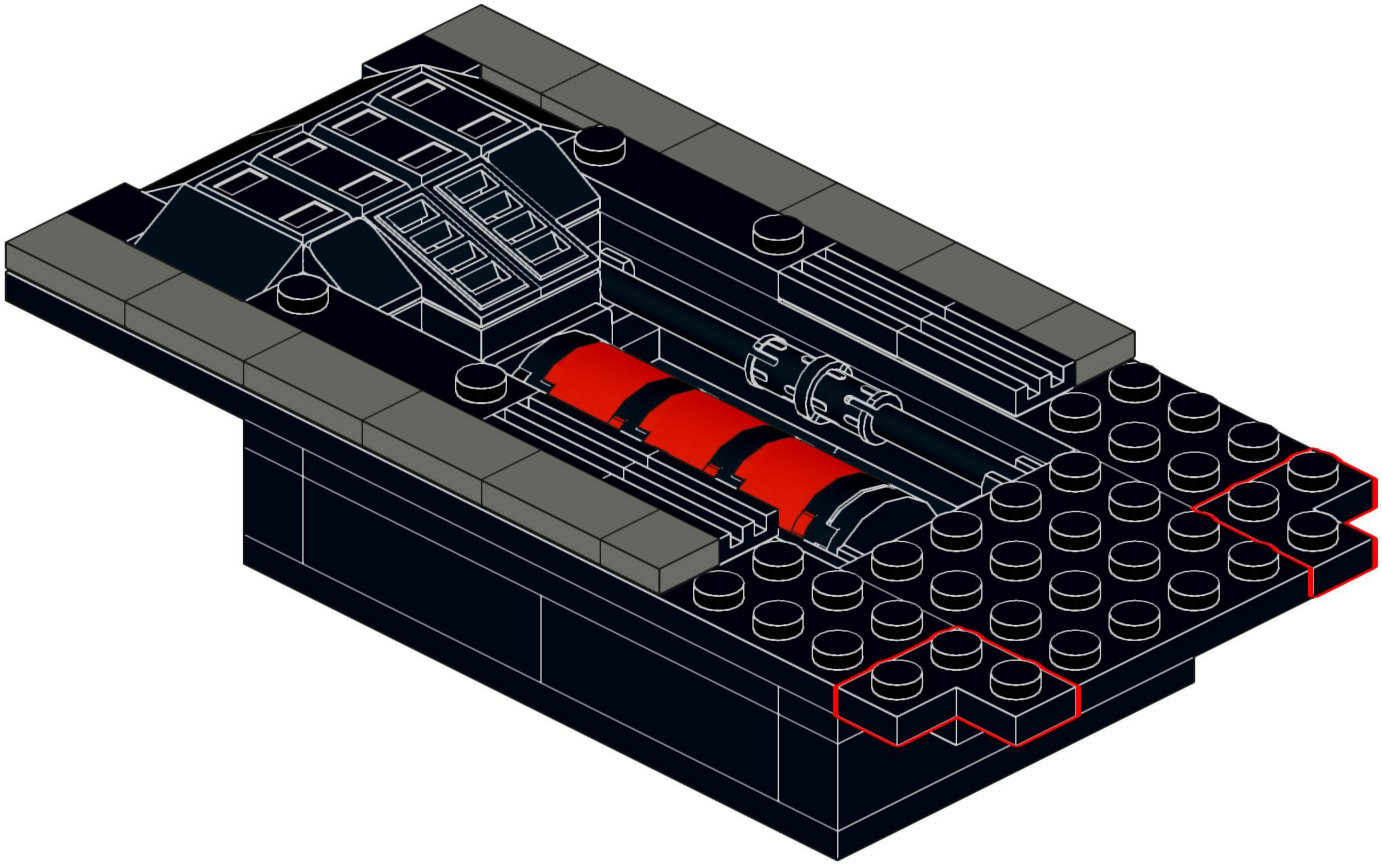

Designed by Michael Gertsch

256

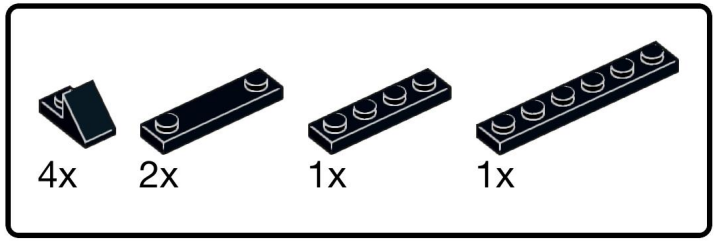

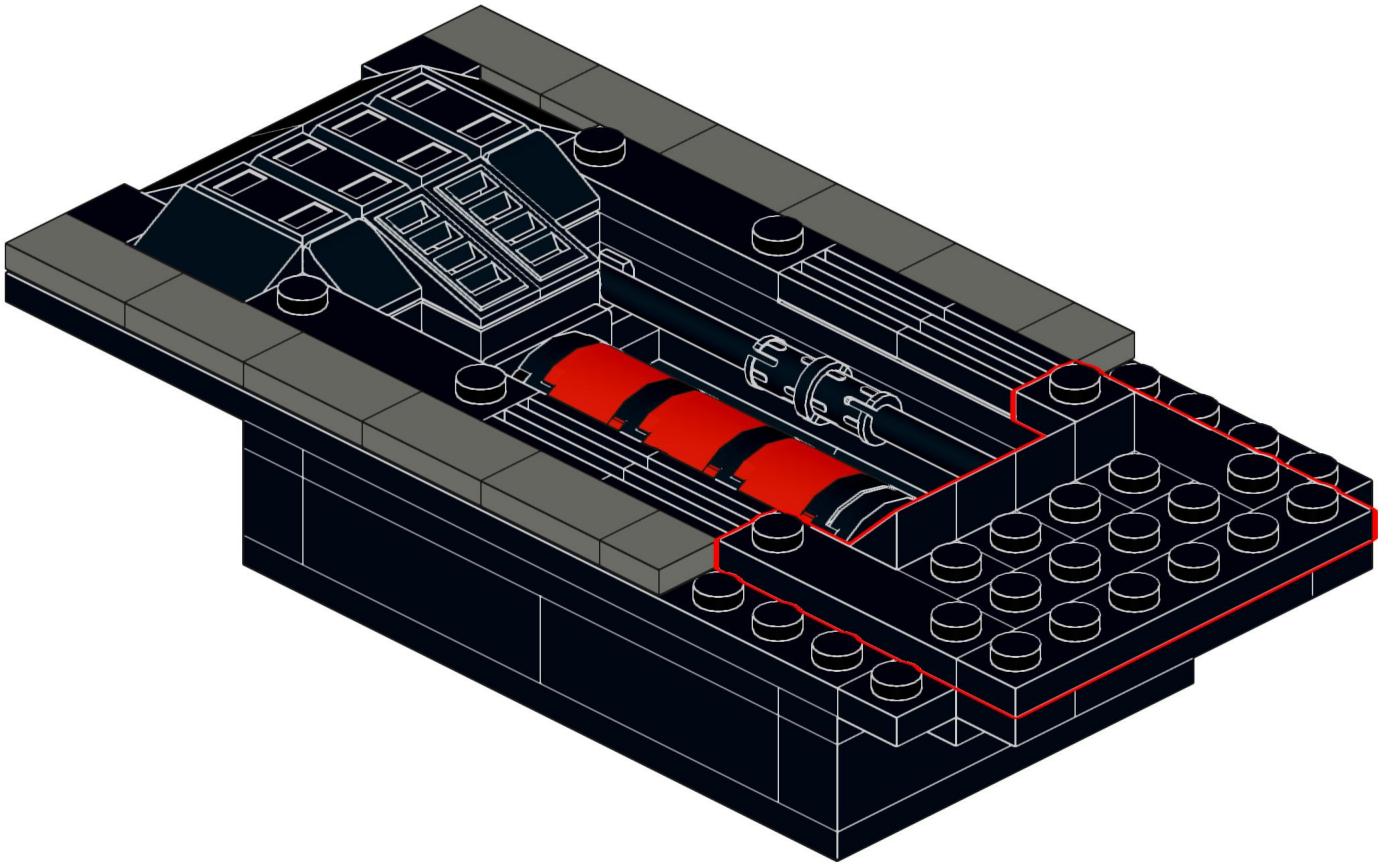

Designed by Michael Gertsch

257

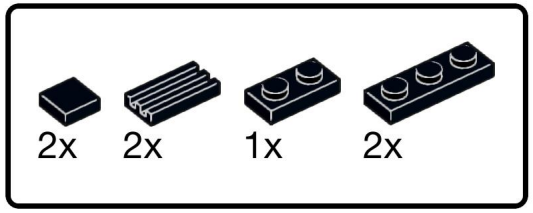

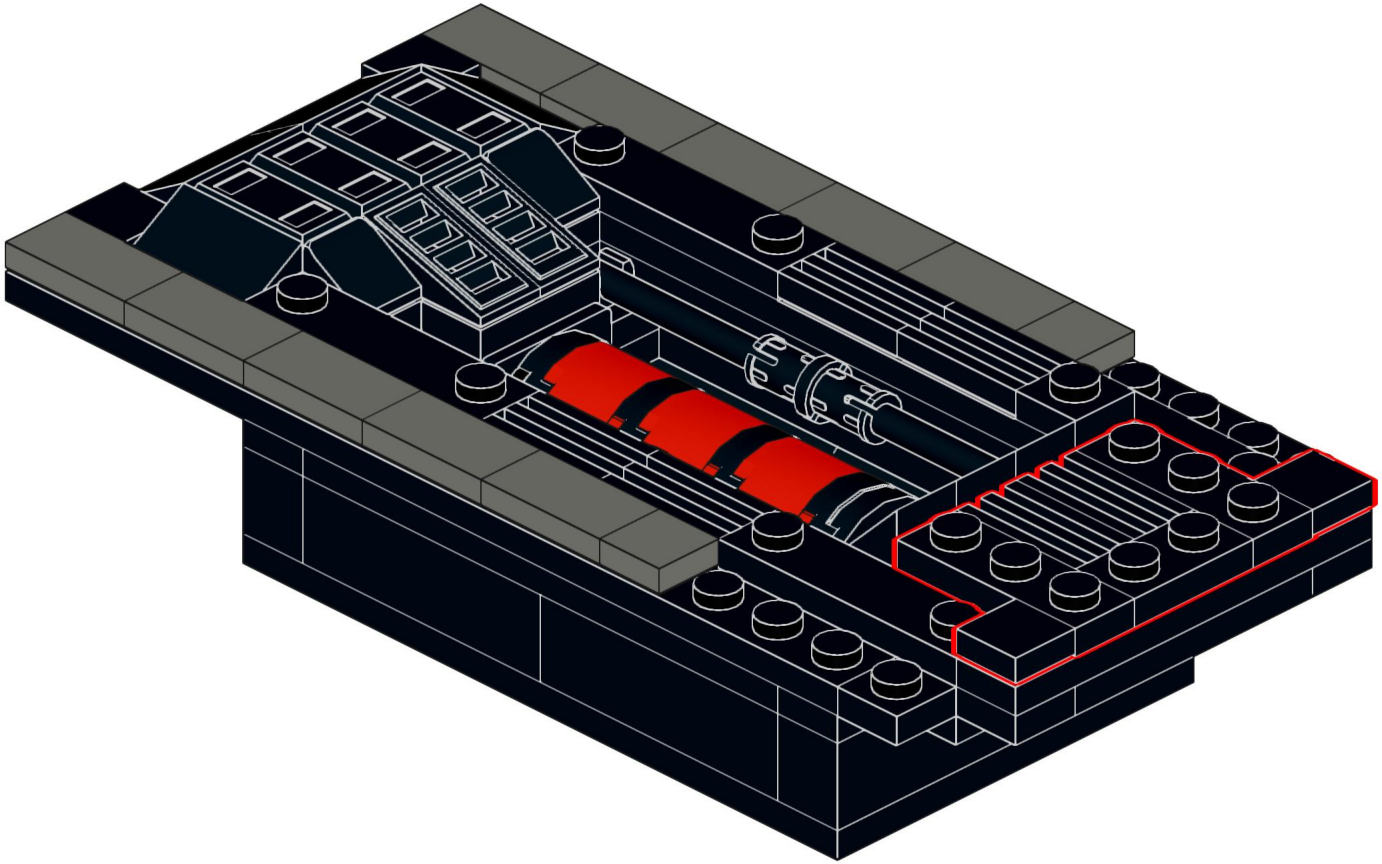

Designed by Michael Gertsch

258

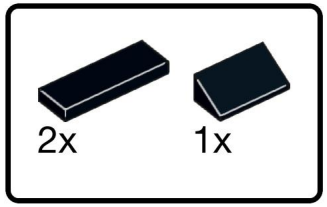

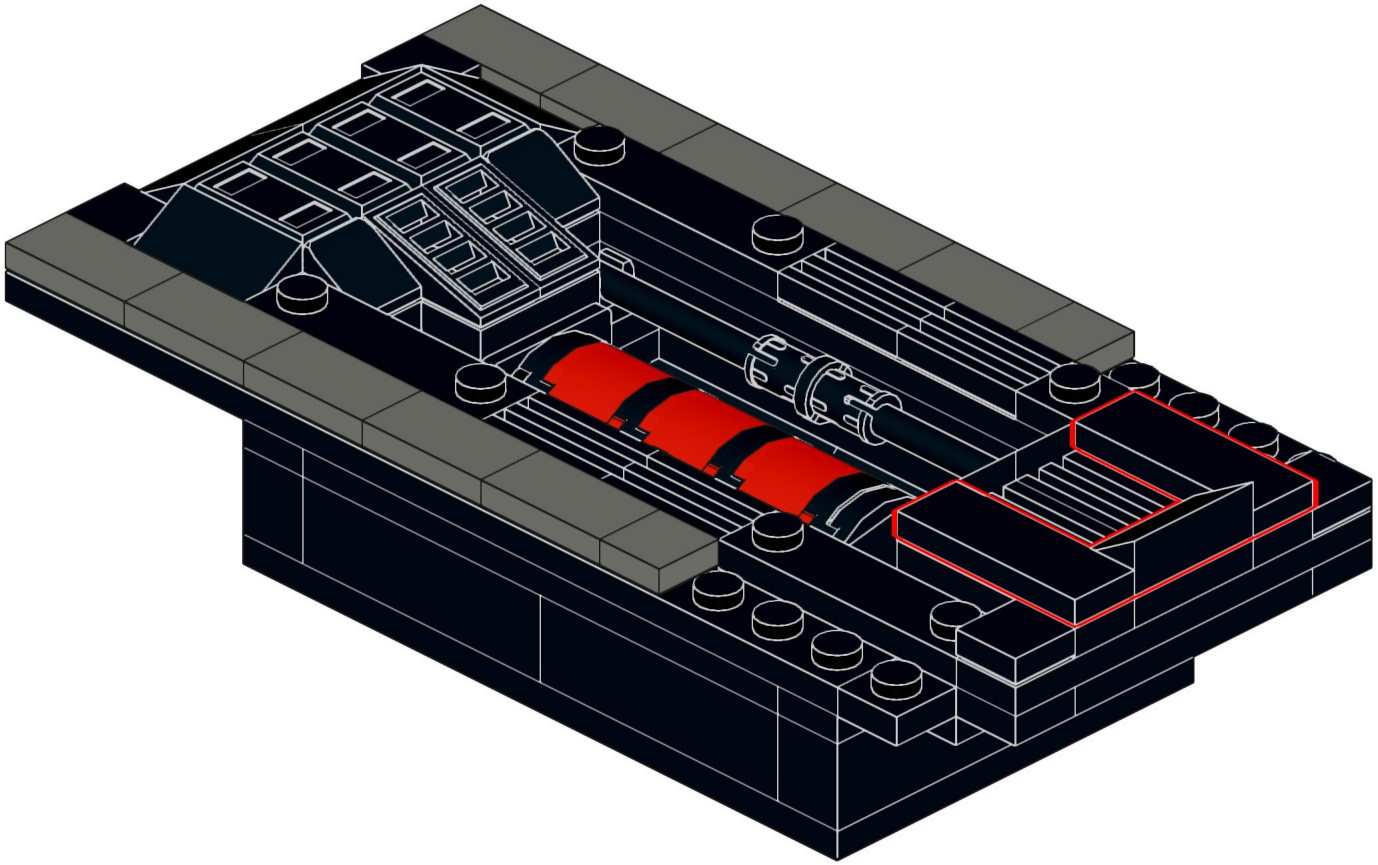

Designed by Michael Gertsch

259

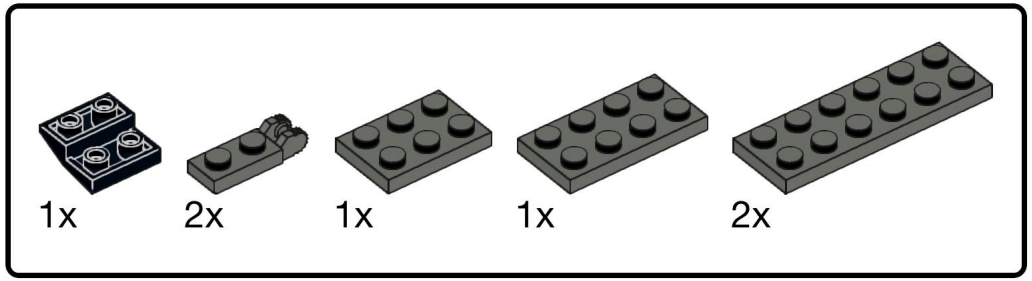

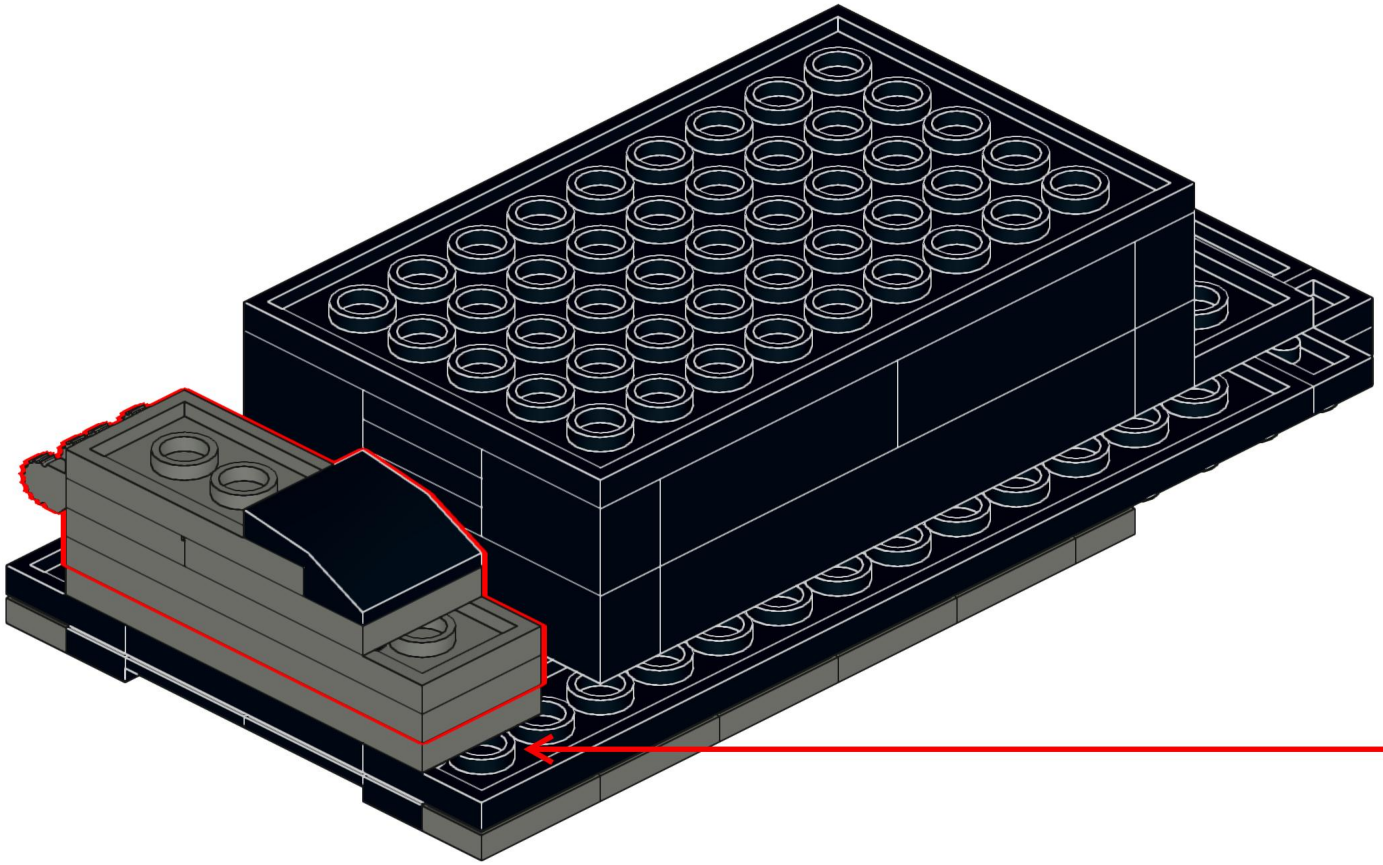

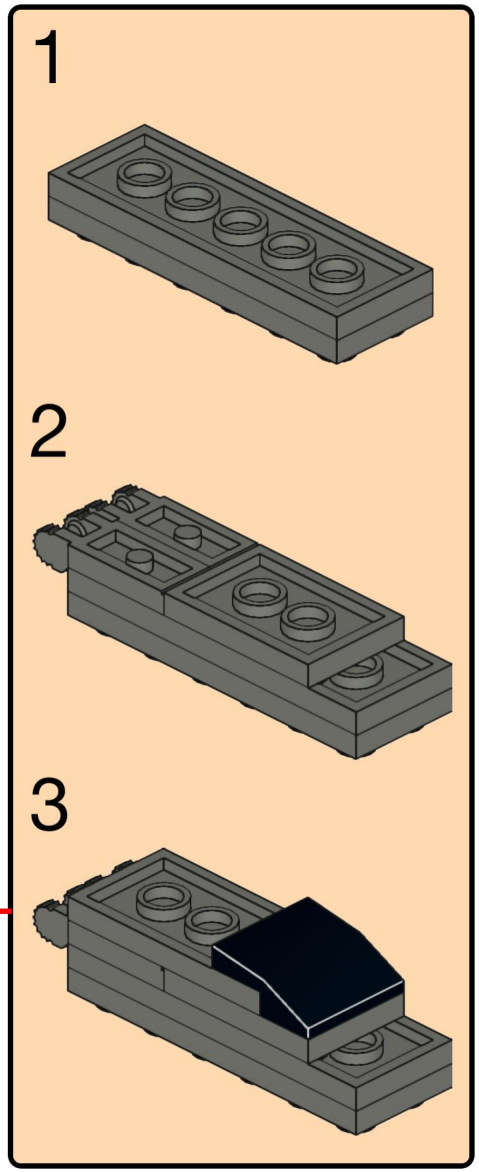

Designed by Michael Gertsch

260

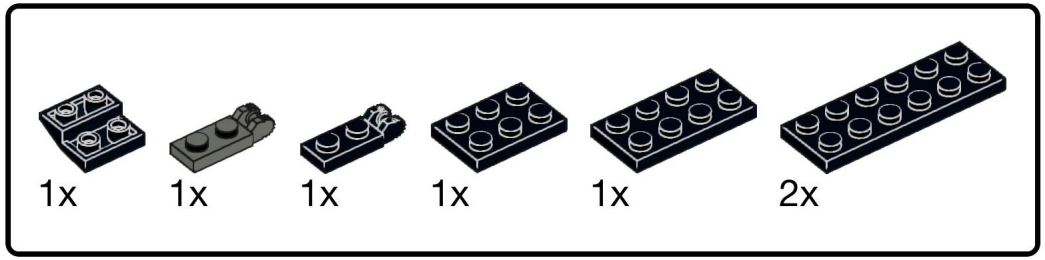

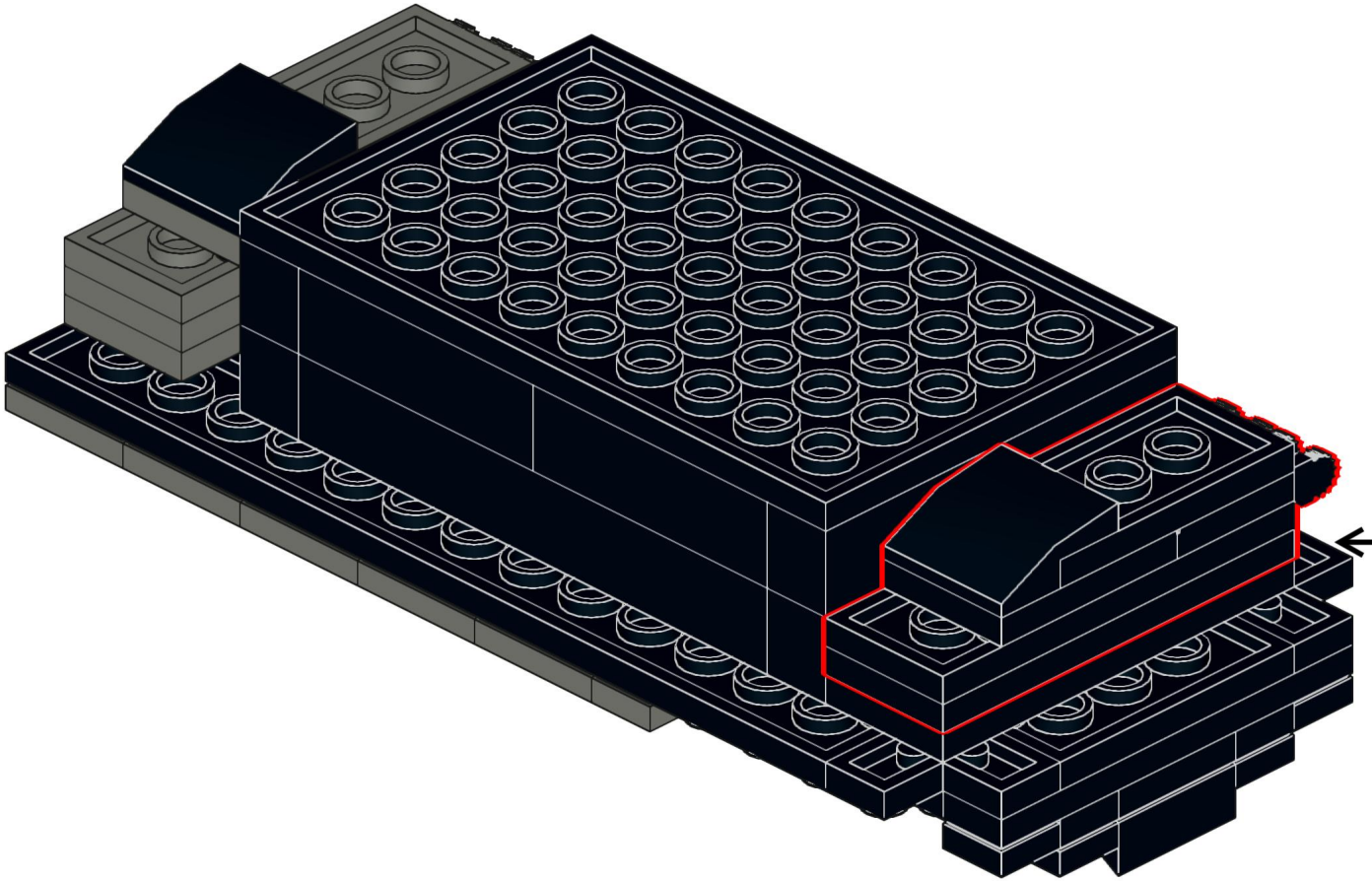

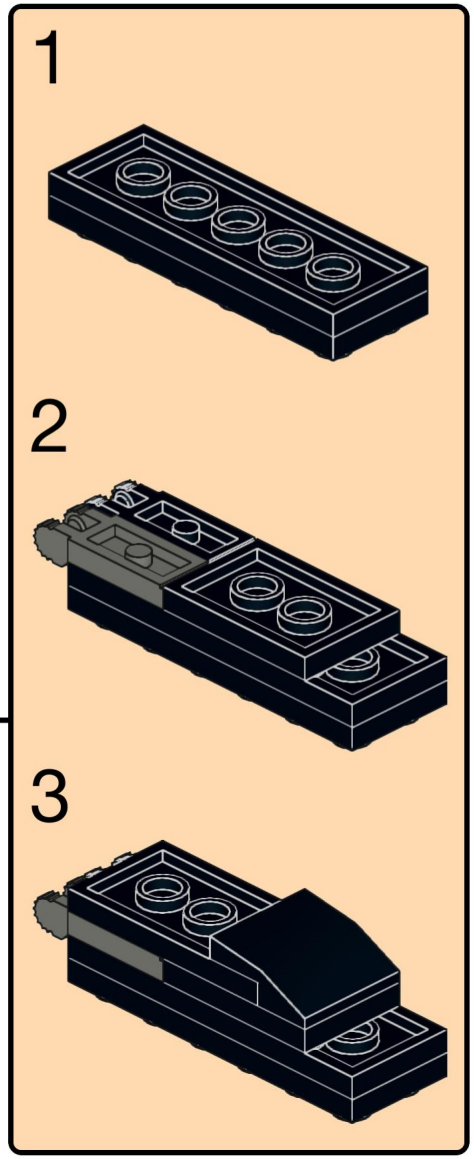

Designed by Michael Gertsch

261

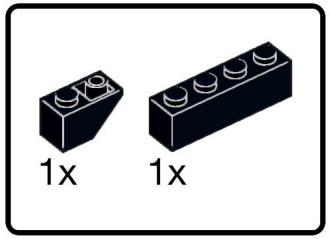

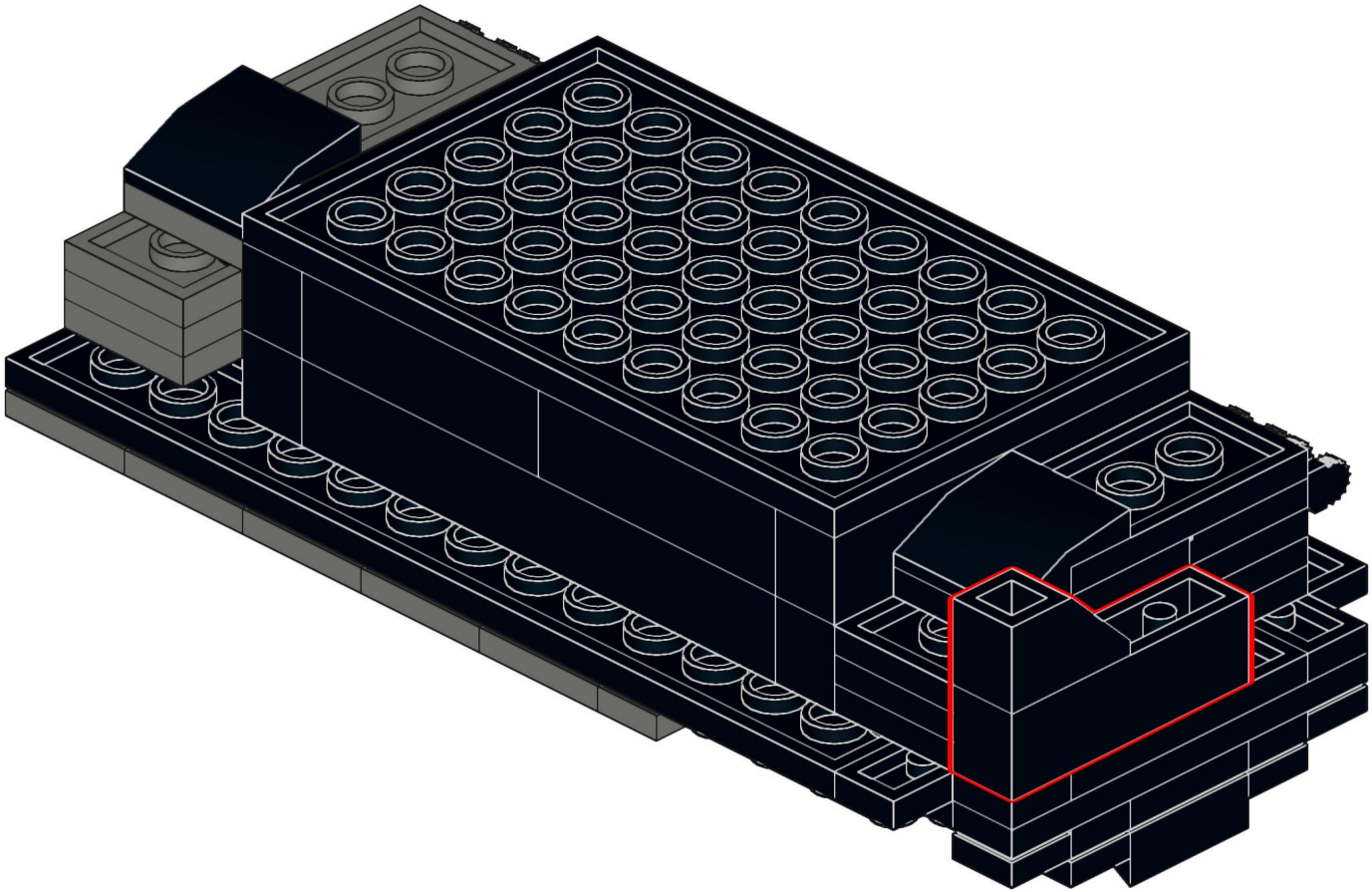

Designed by Michael Gertsch

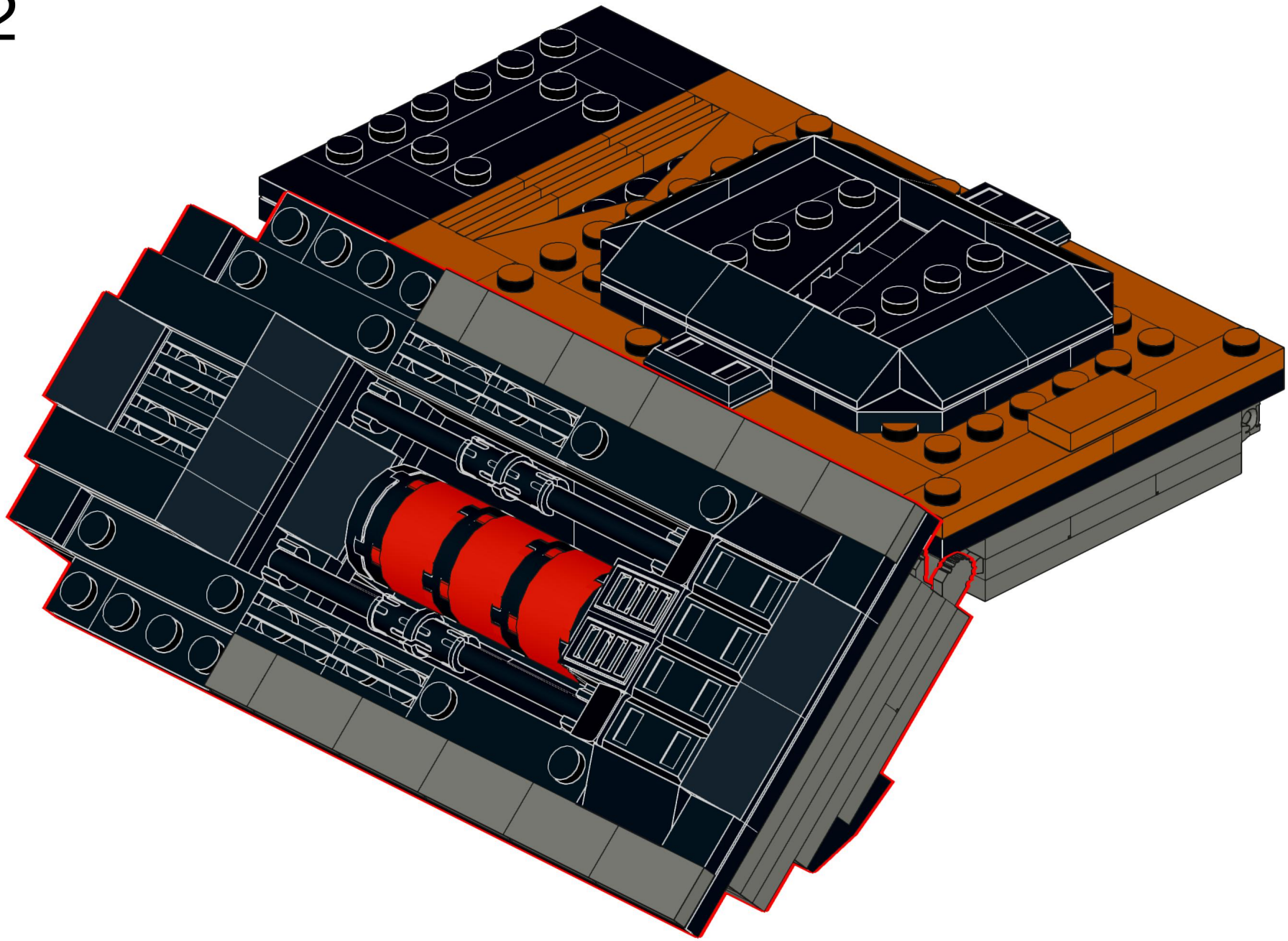

Designed by Michael Gertsch

263

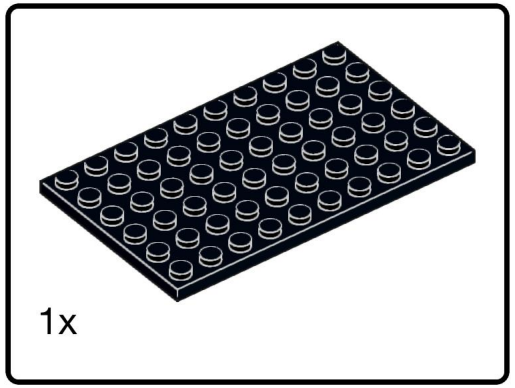

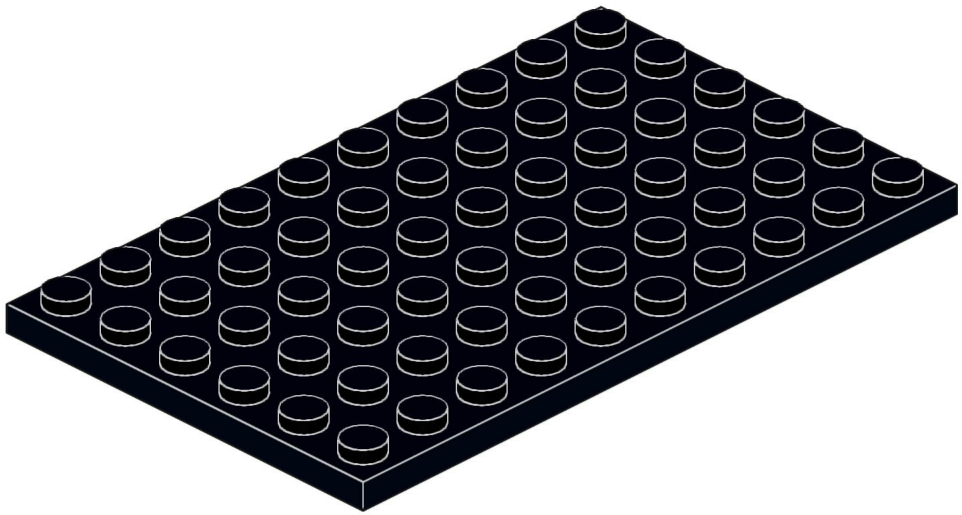

264

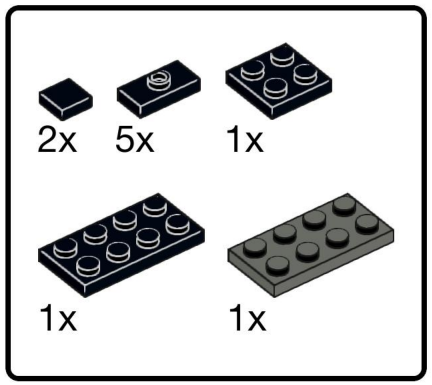

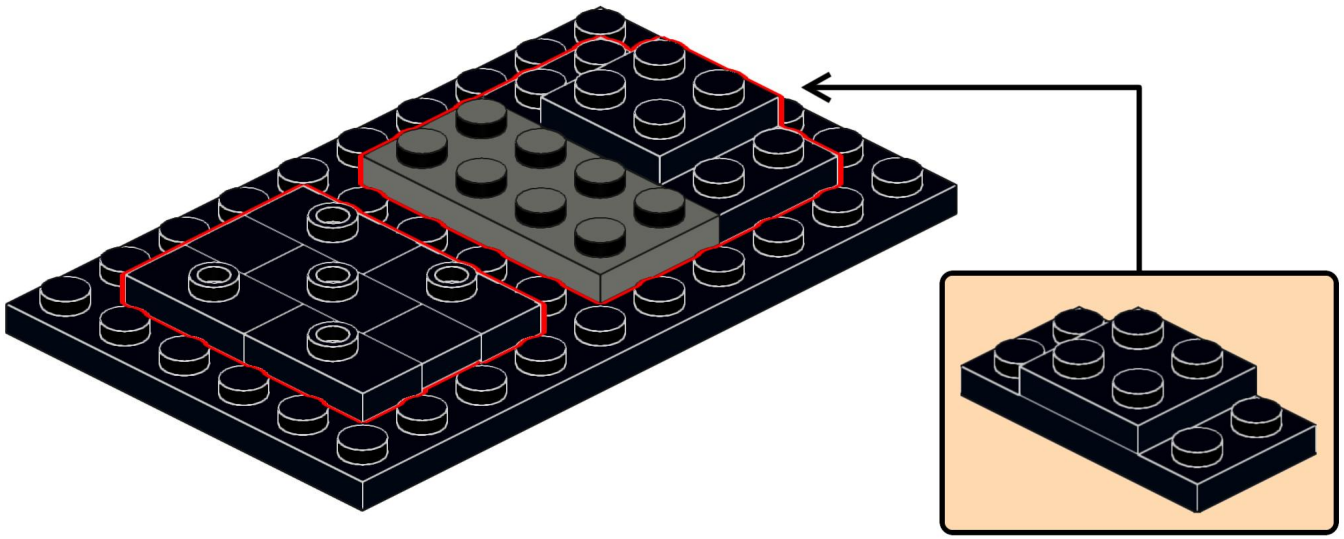

Designed by Michael Gertsch

265

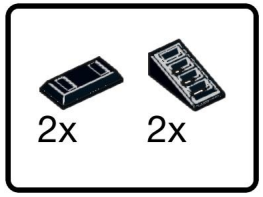

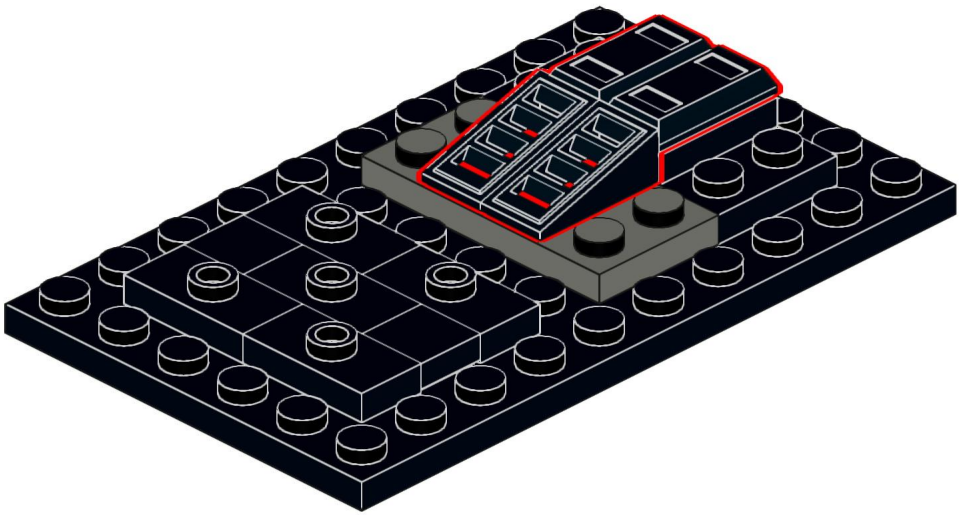

266

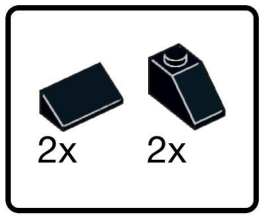

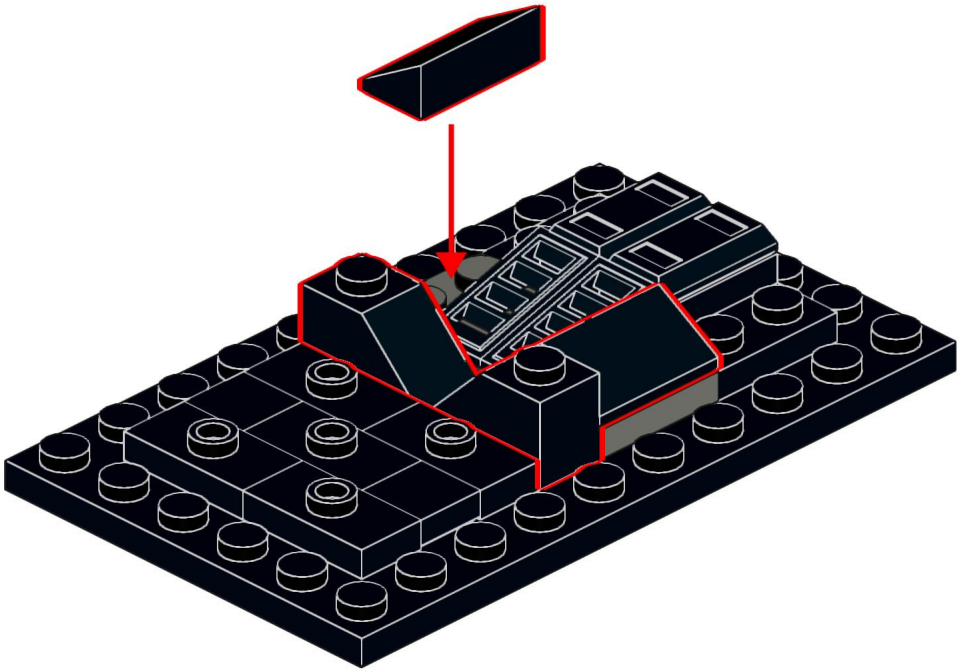

Designed by Michael Gertsch

267

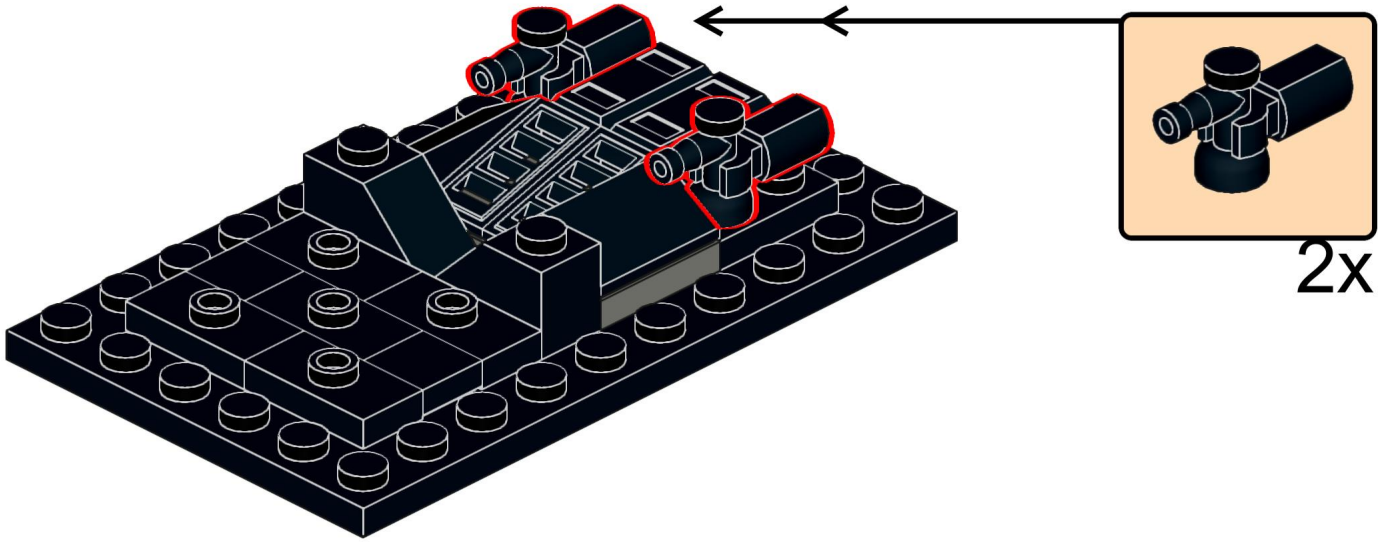

268

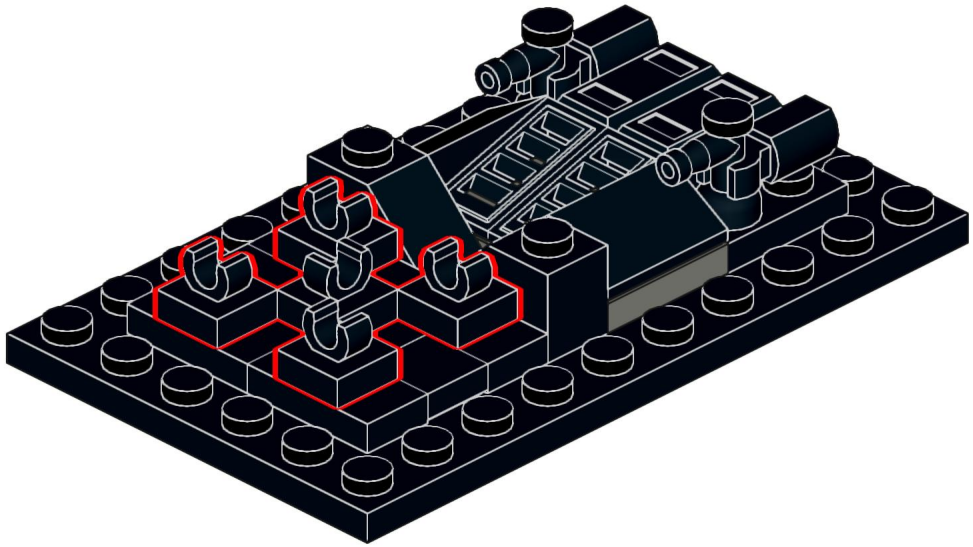

Designed by Michael Gertsch

269

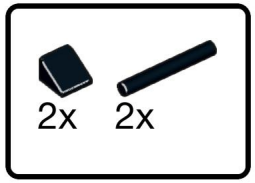

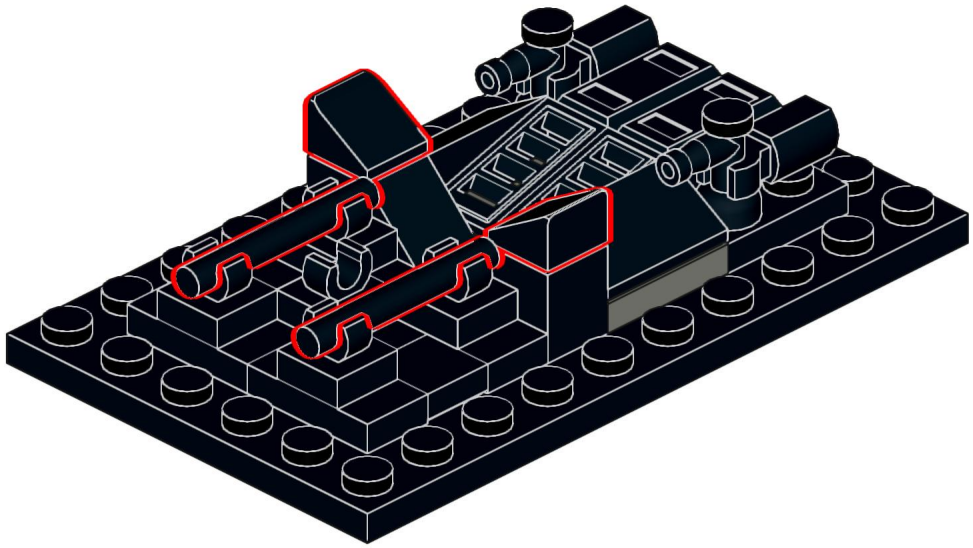

270

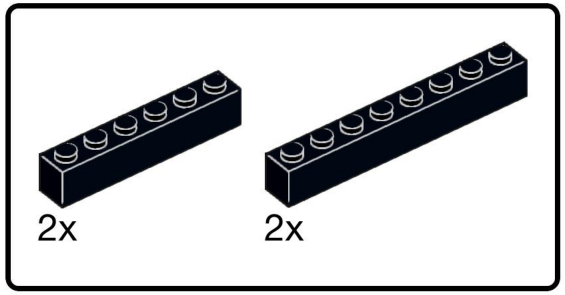

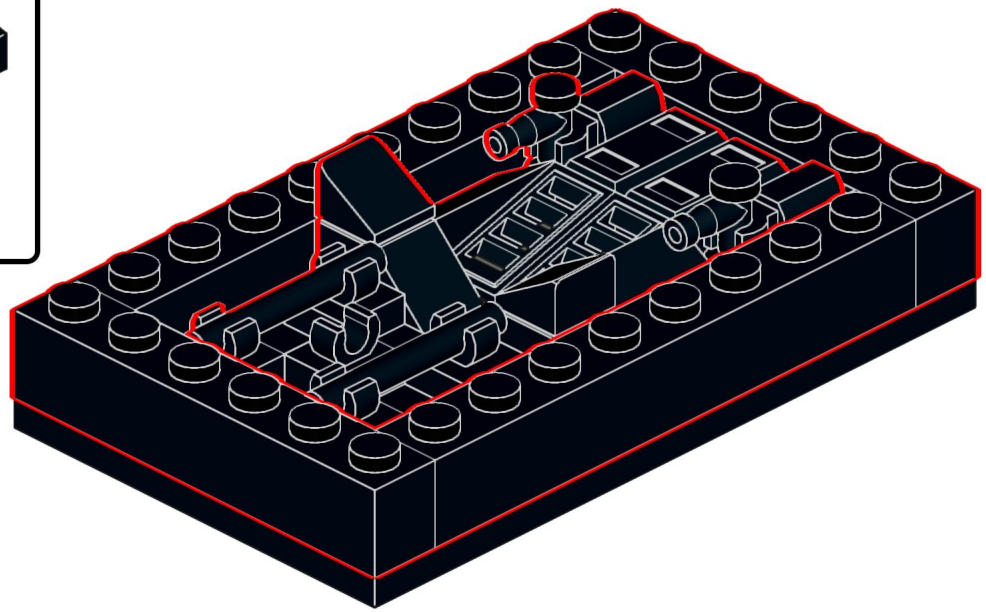

Designed by Michael Gertsch

271

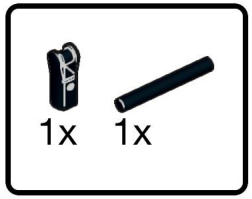

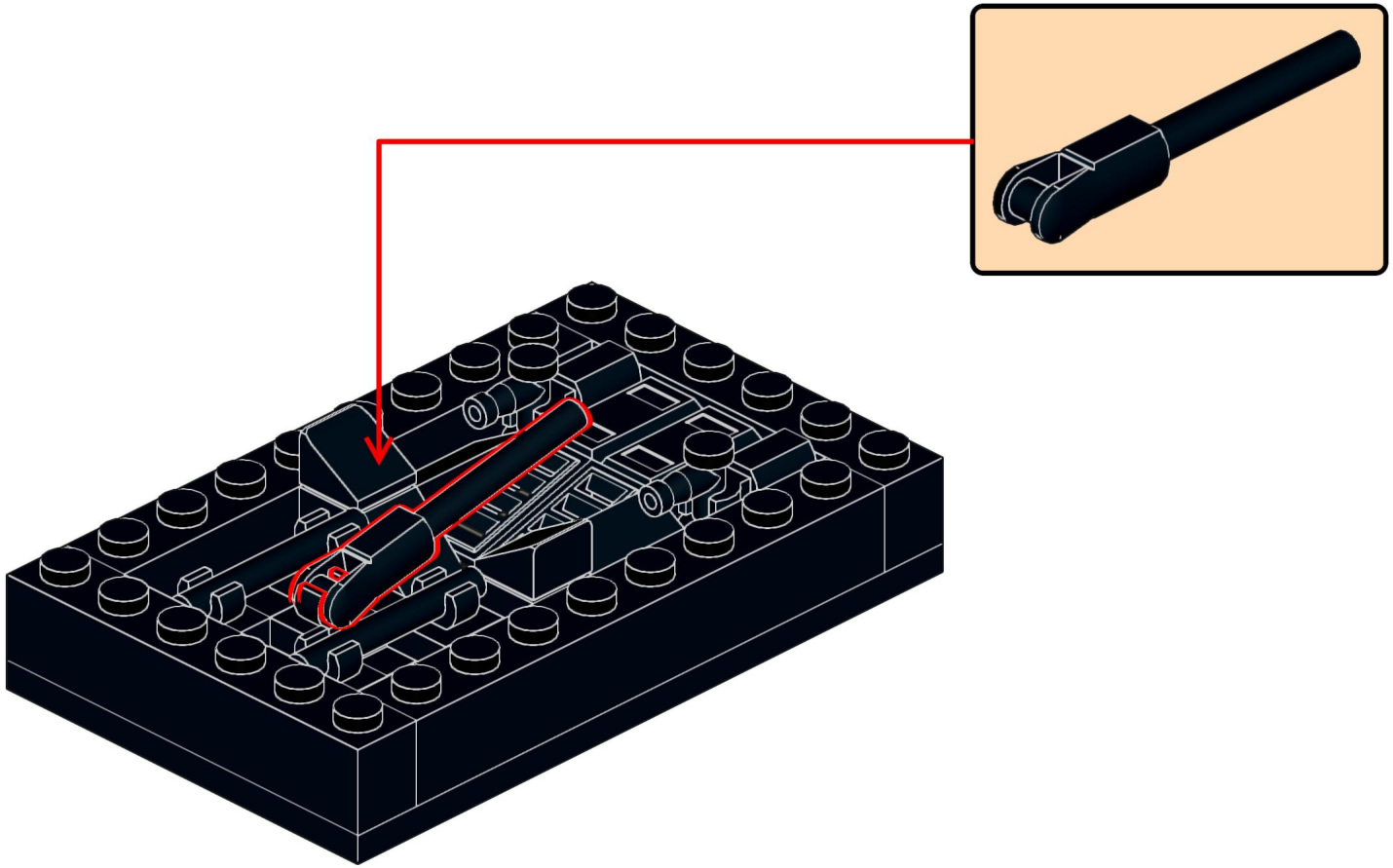

Designed by Michael Gertsch

272

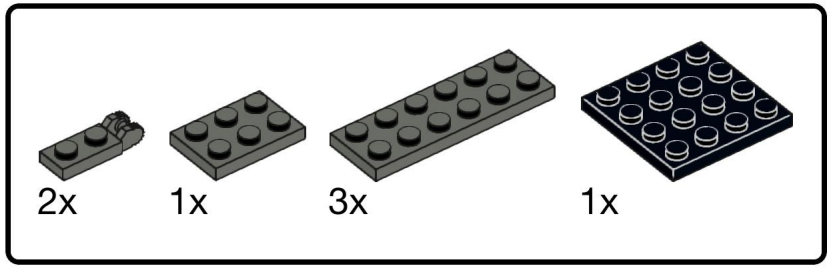

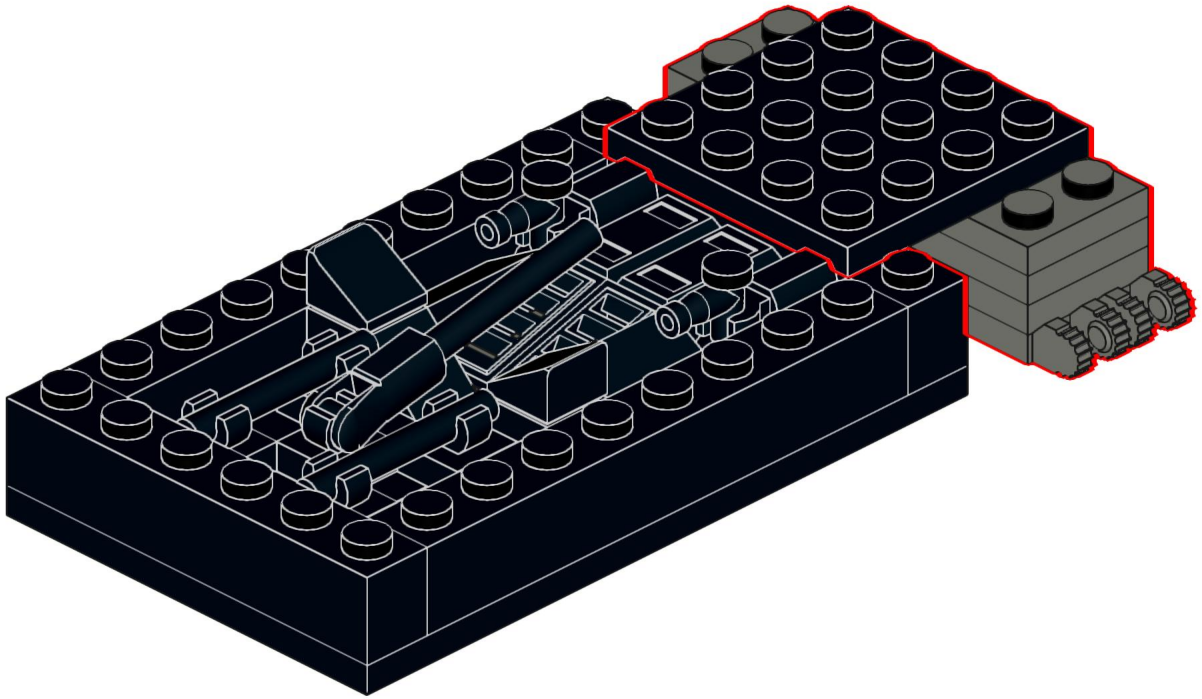

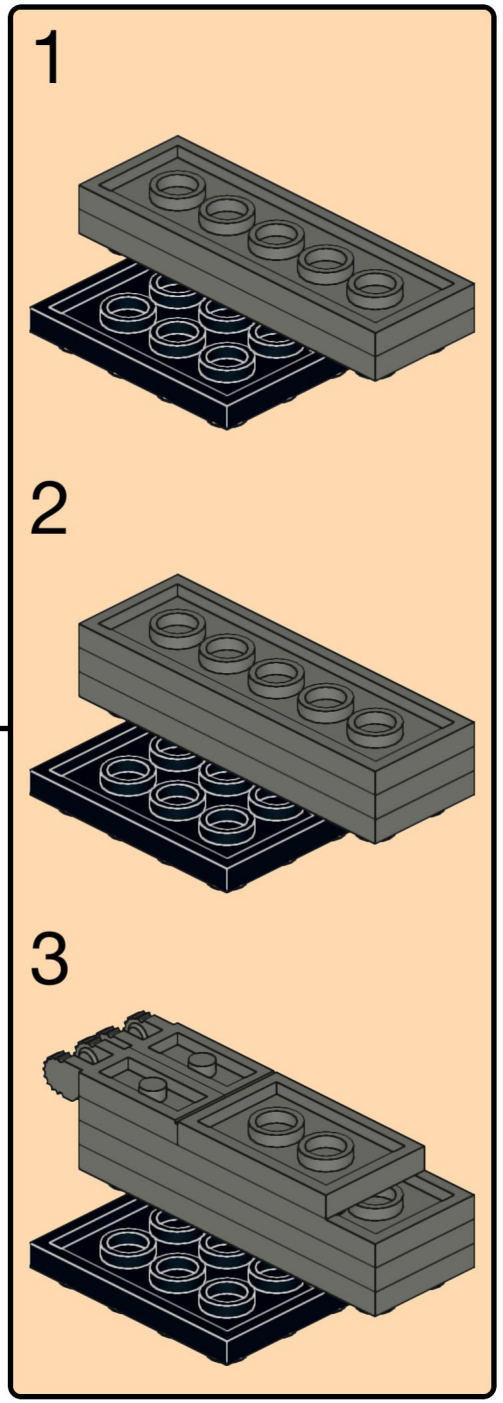

Designed by Michael Gertsch

273

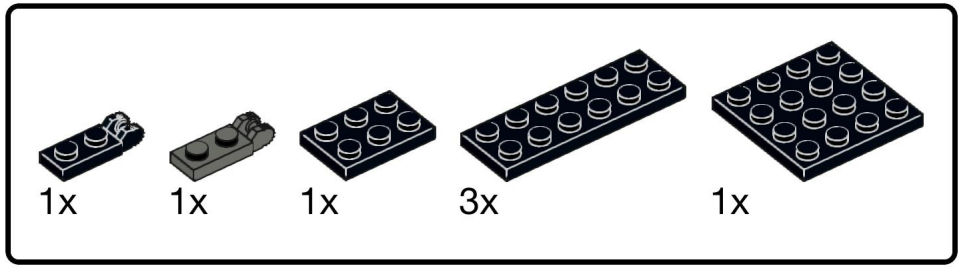

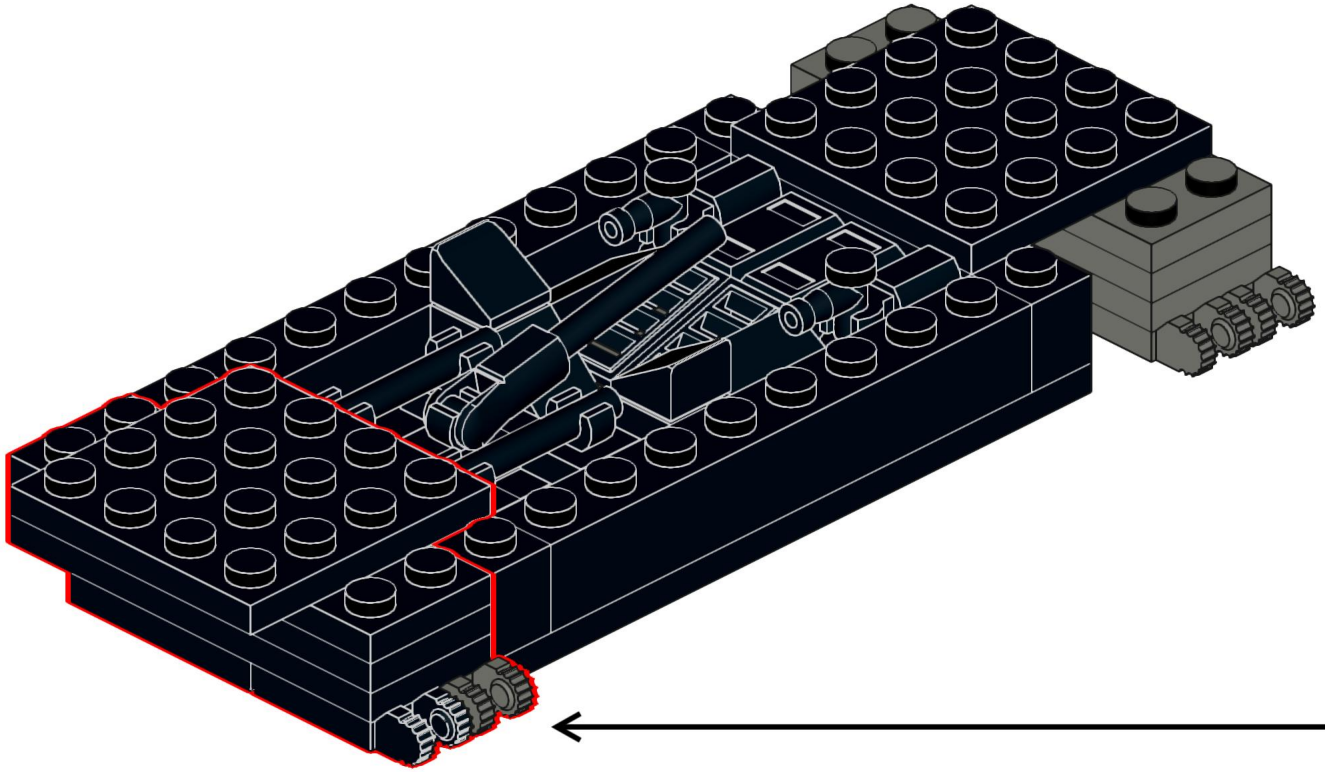

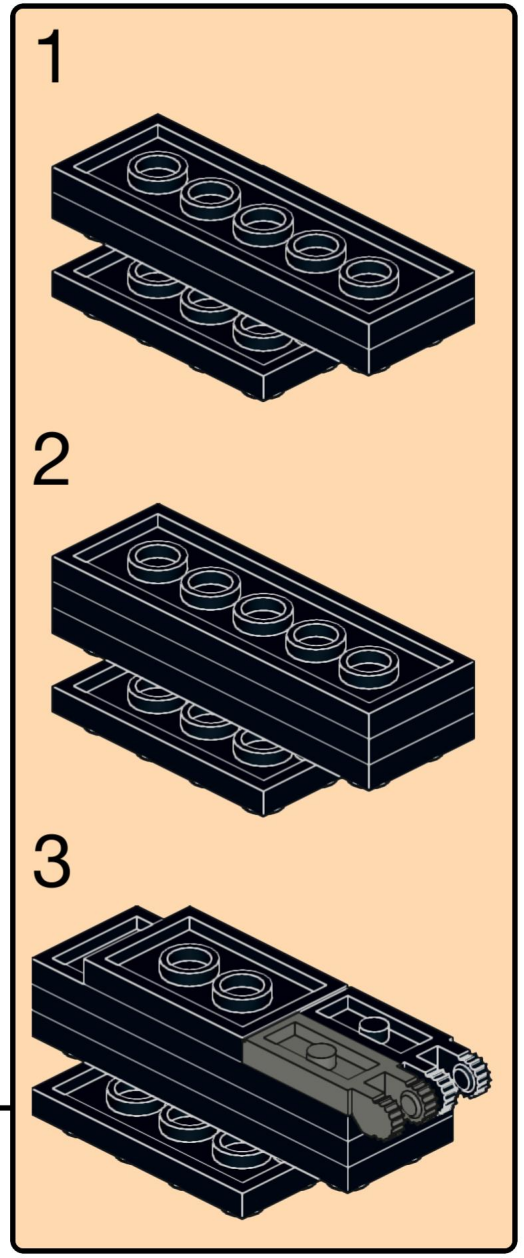

Designed by Michael Gertsch

274

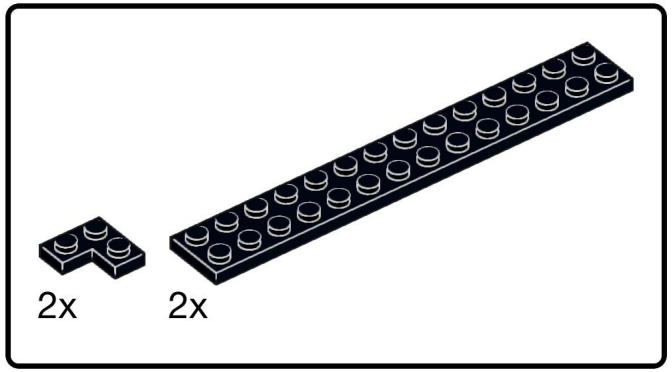

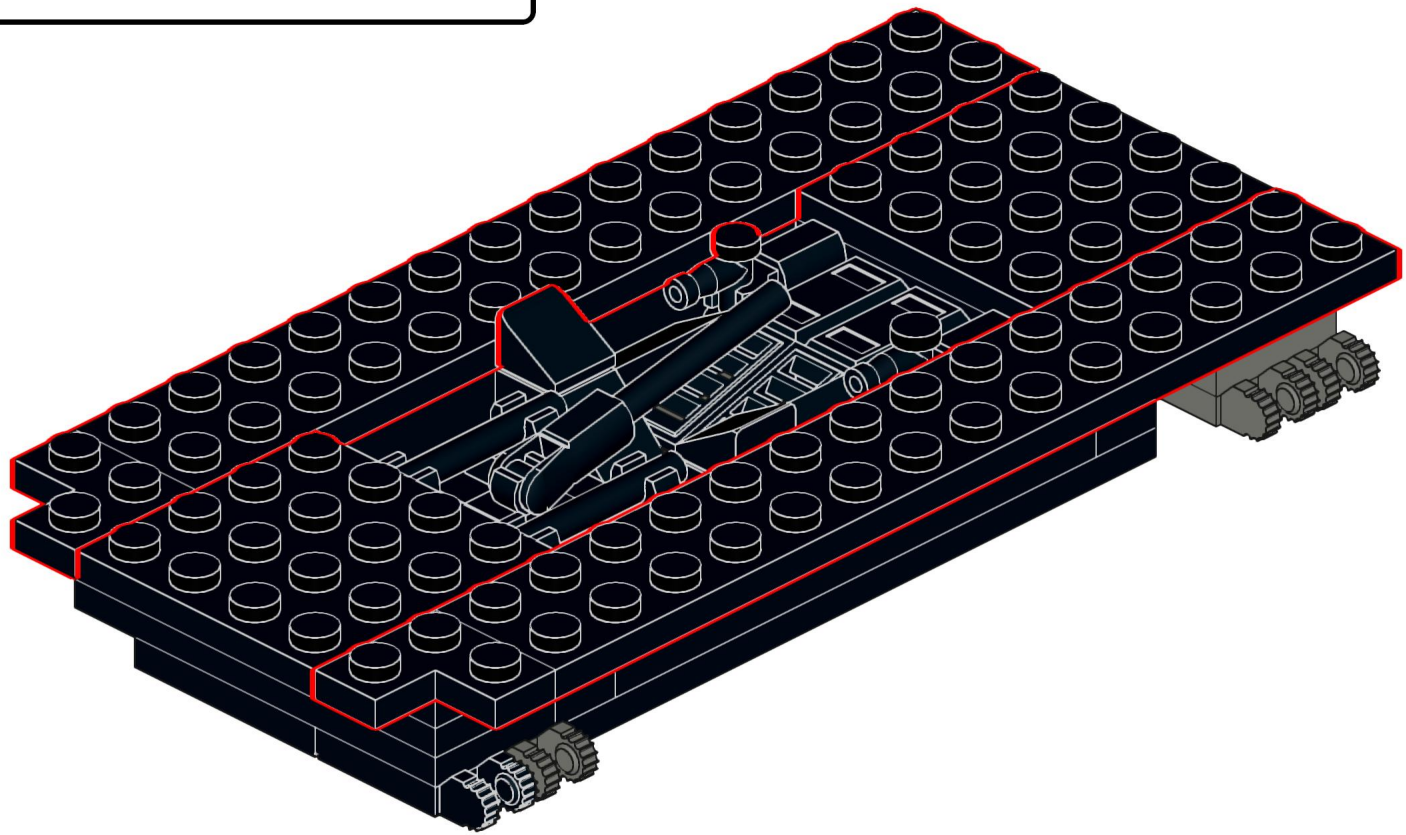

Designed by Michael Gertsch

275

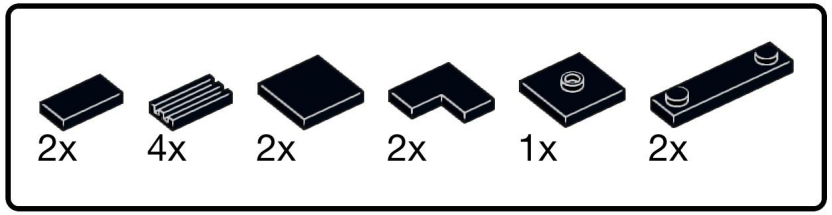

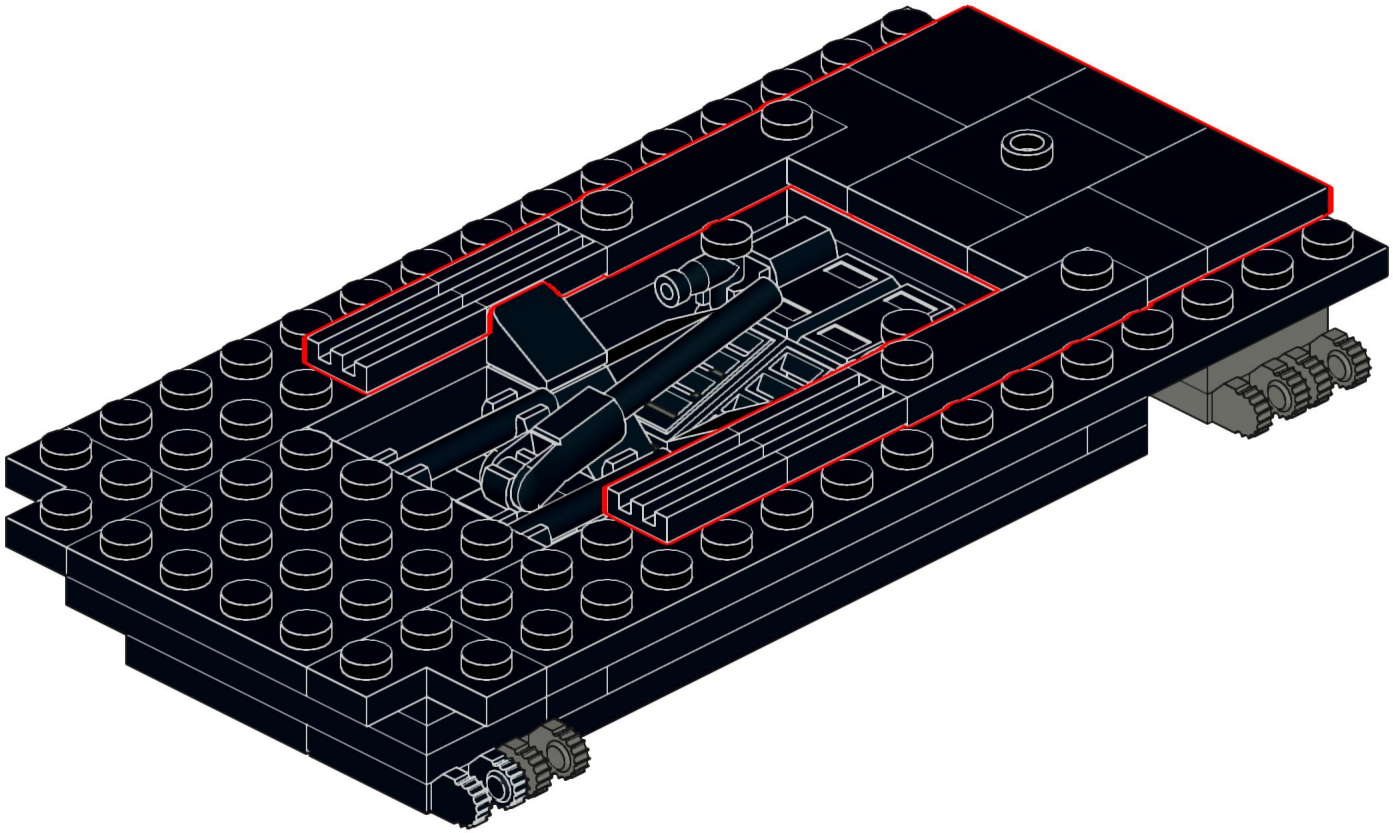

Designed by Michael Gertsch

276

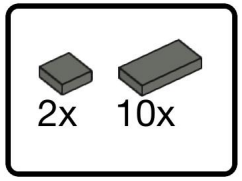

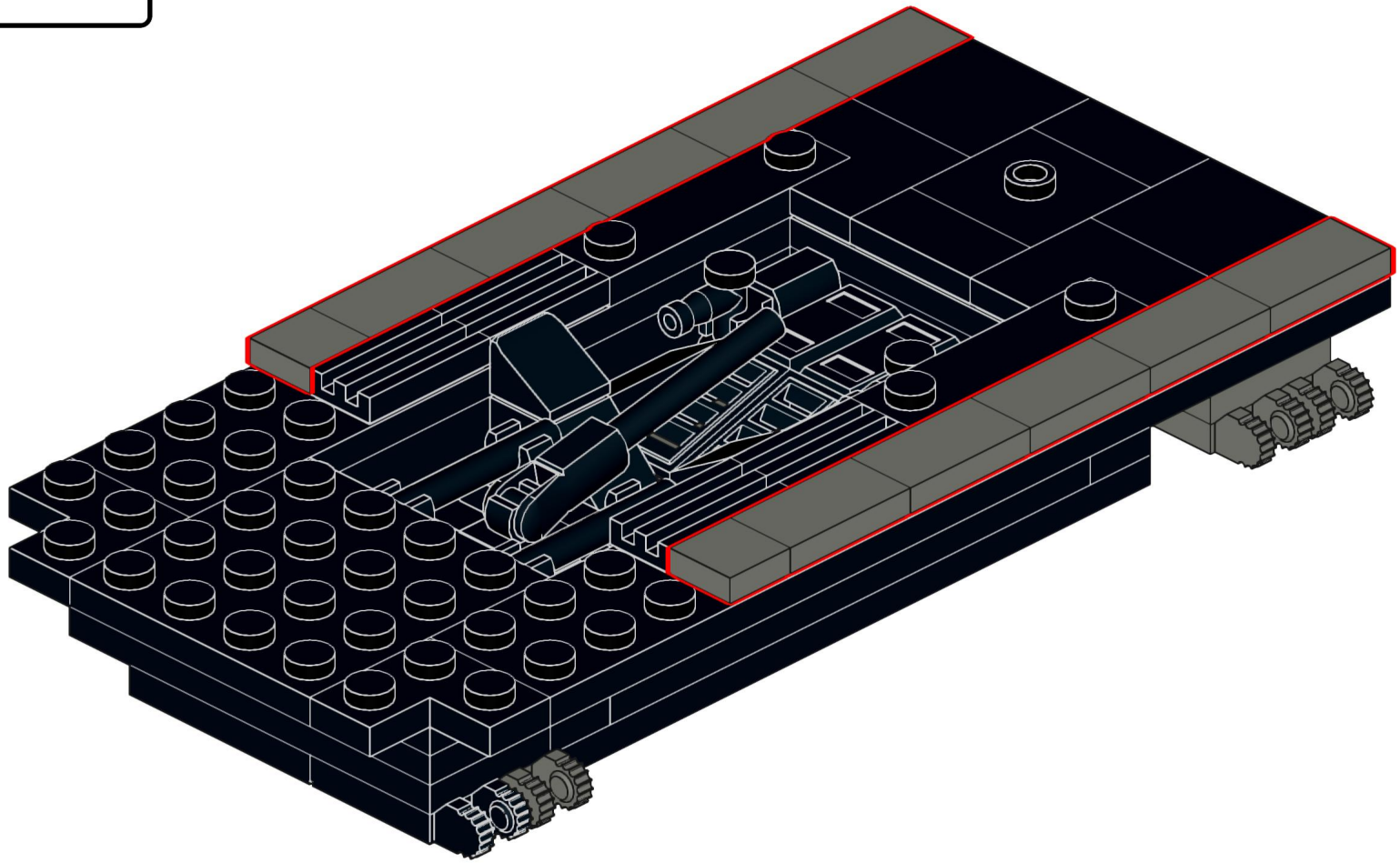

Designed by Michael Gertsch

277

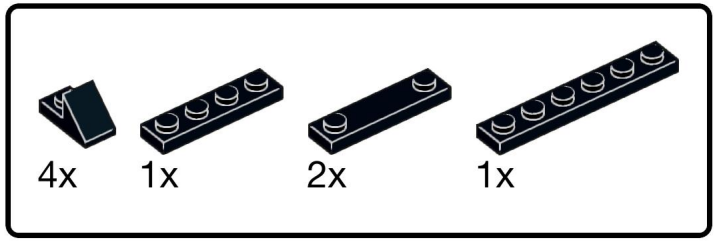

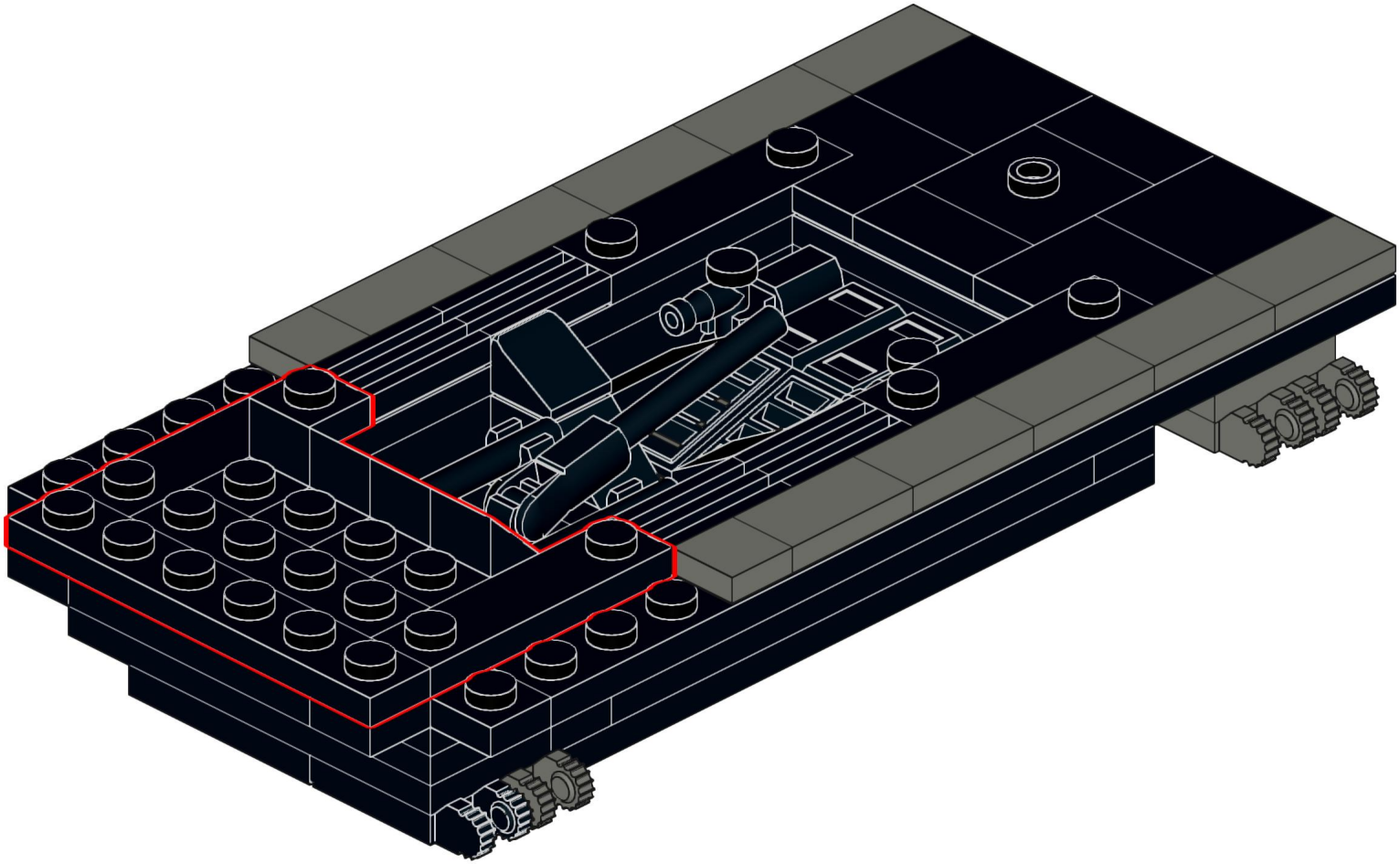

Designed by Michael Gertsch

278

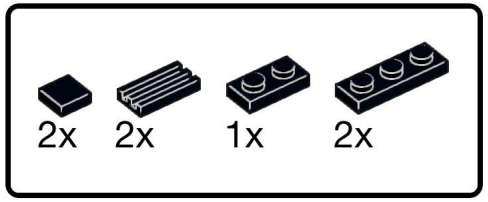

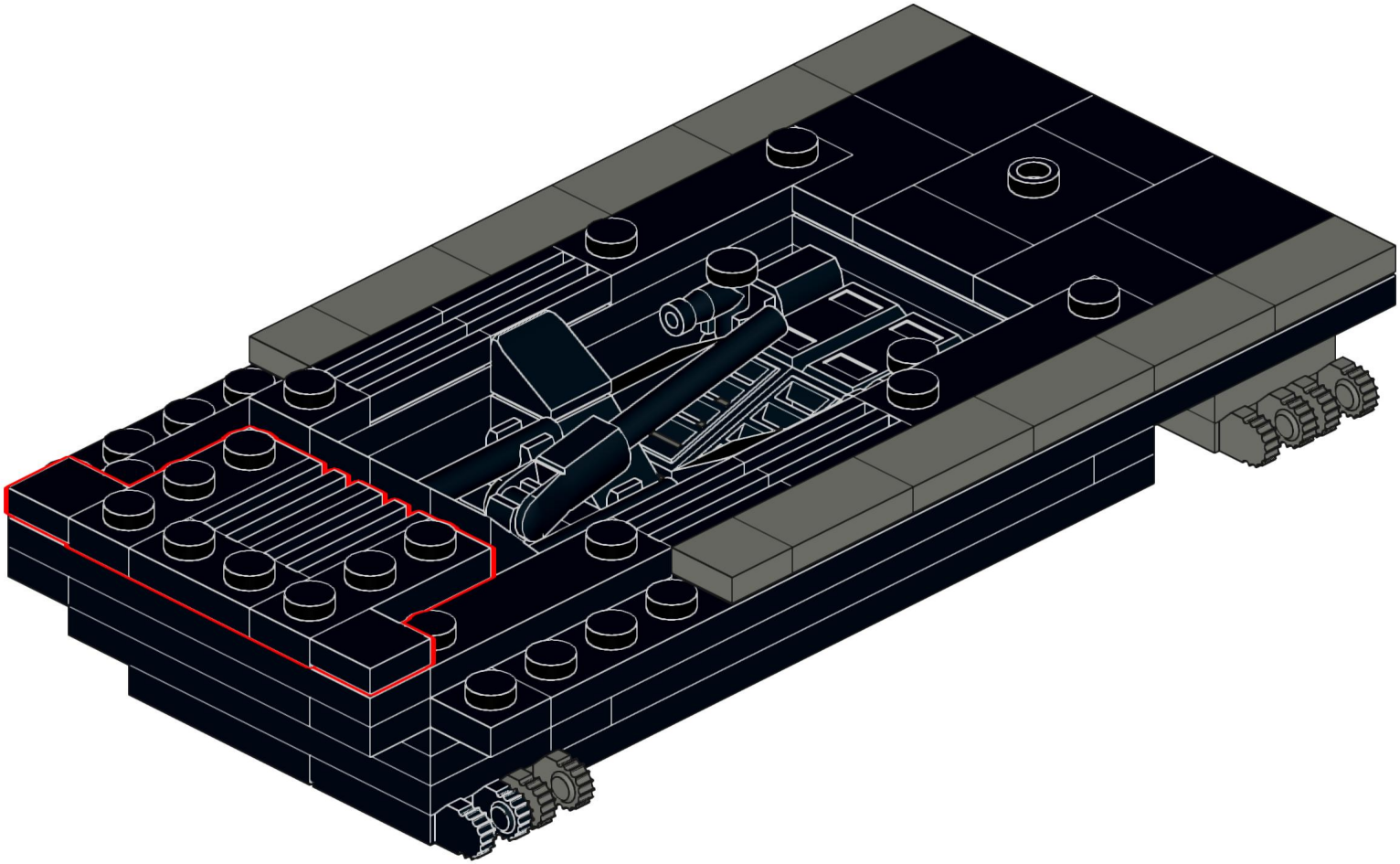

Designed by Michael Gertsch

279

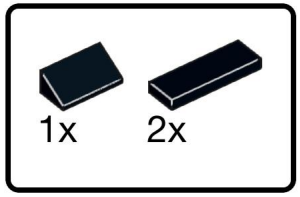

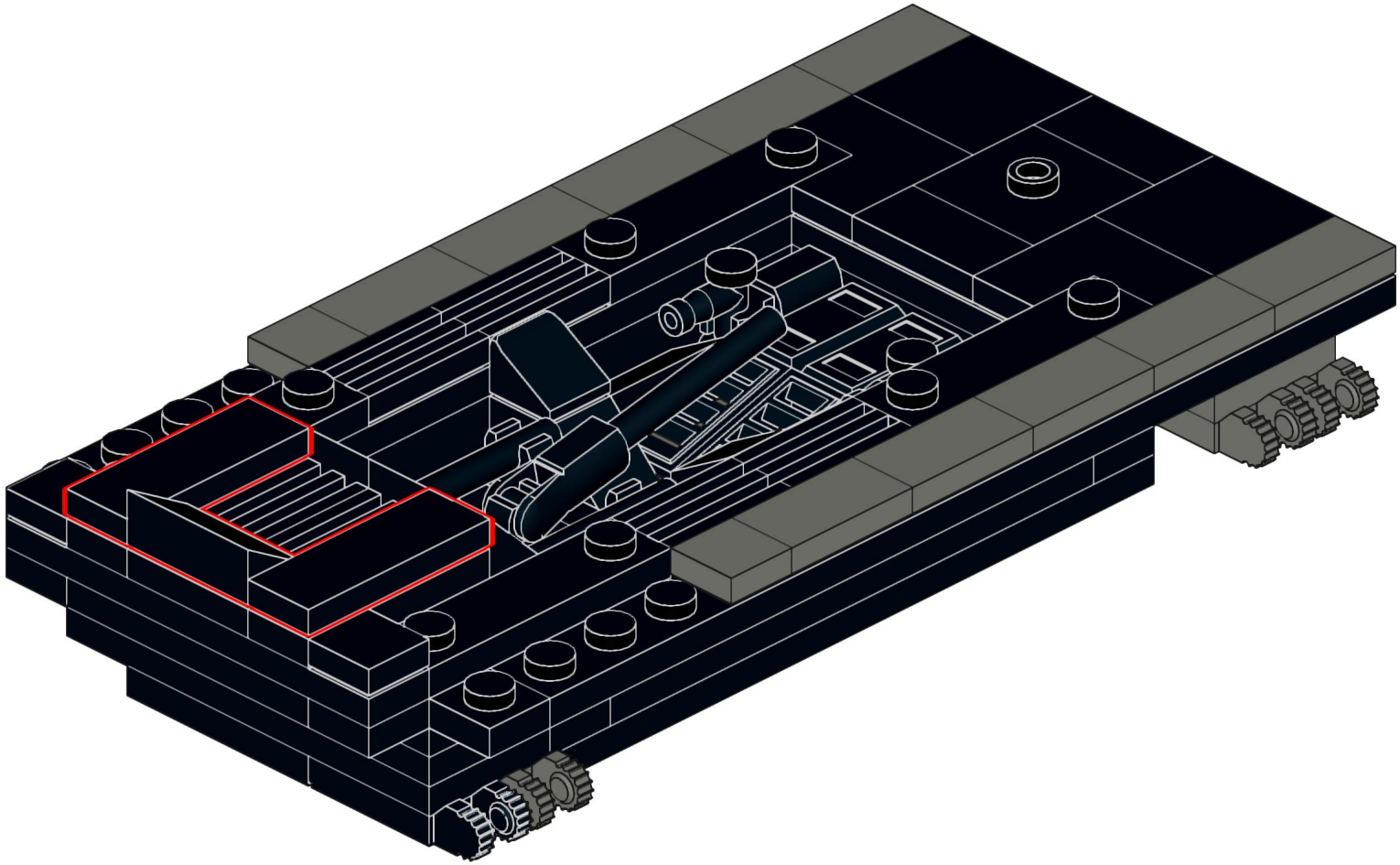

Designed by Michael Gertsch

280

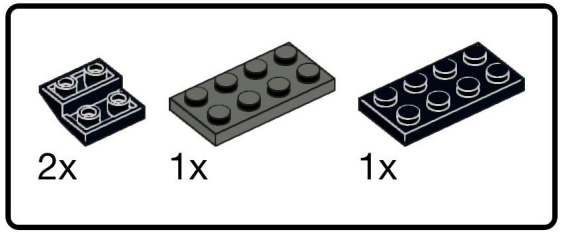

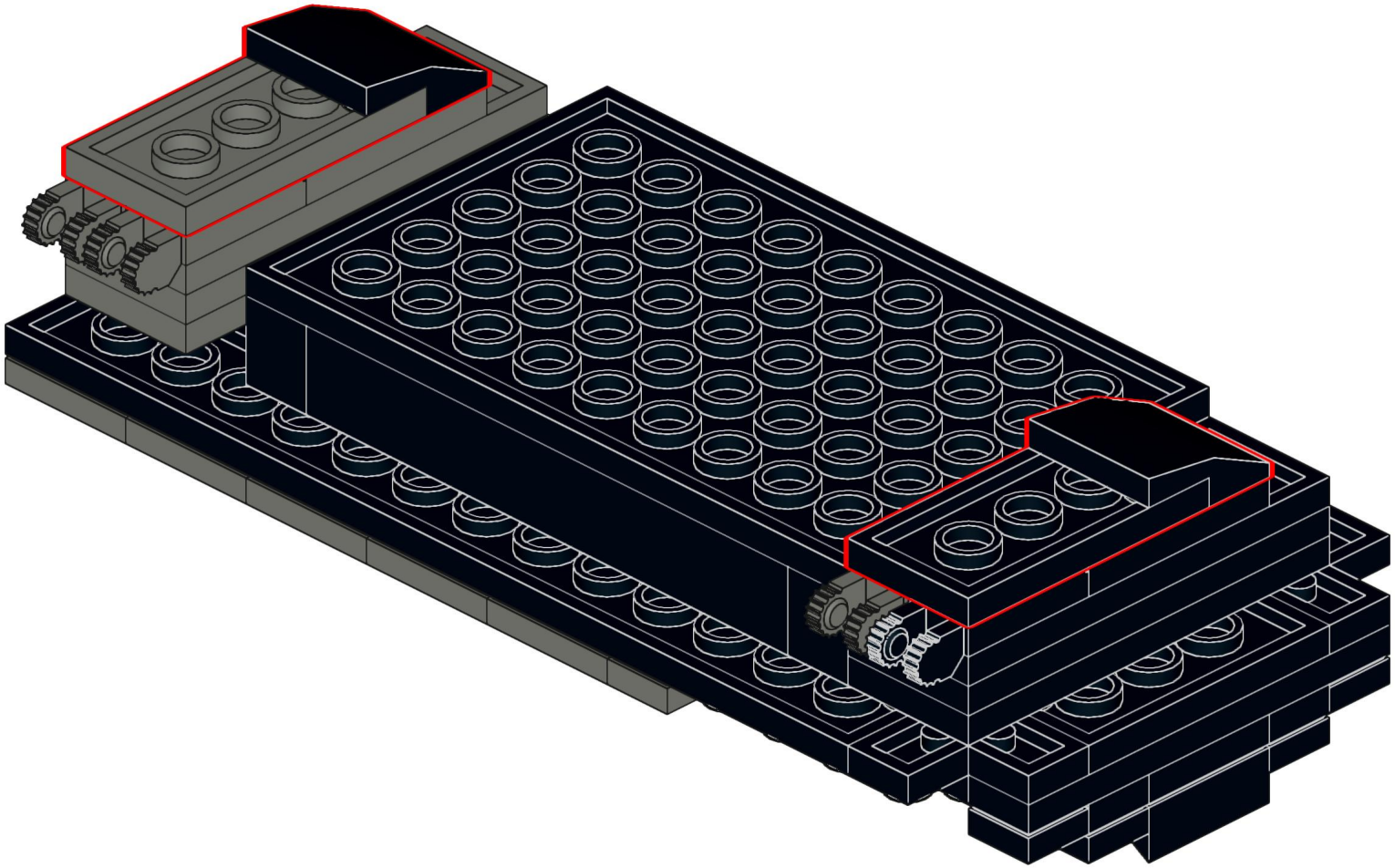

Designed by Michael Gertsch

281

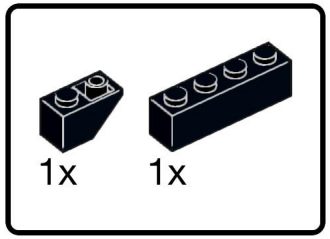

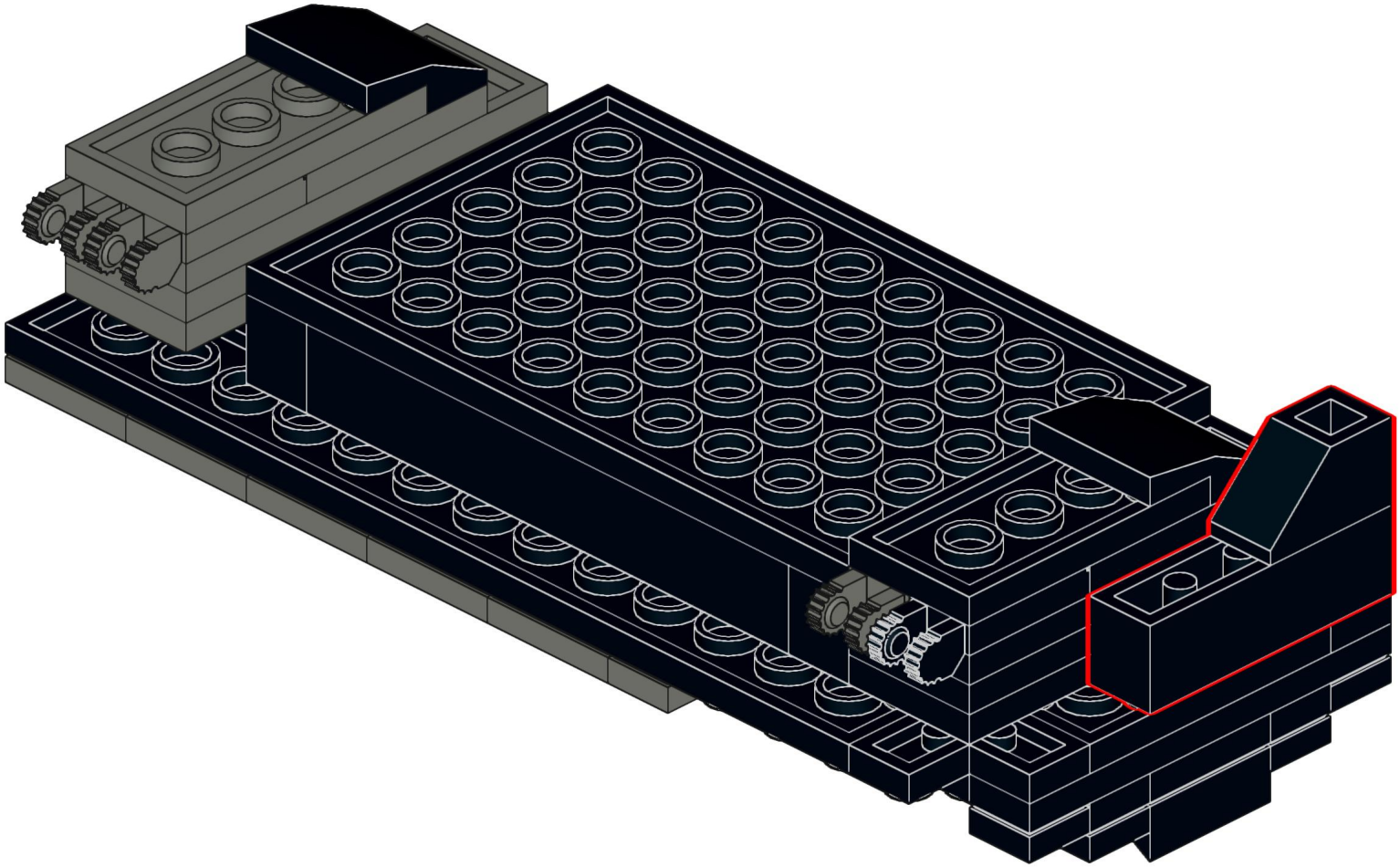

Designed by Michael Gertsch

282

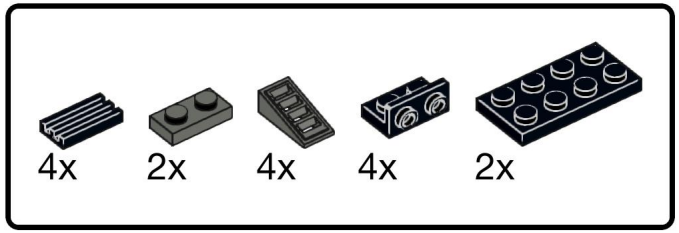

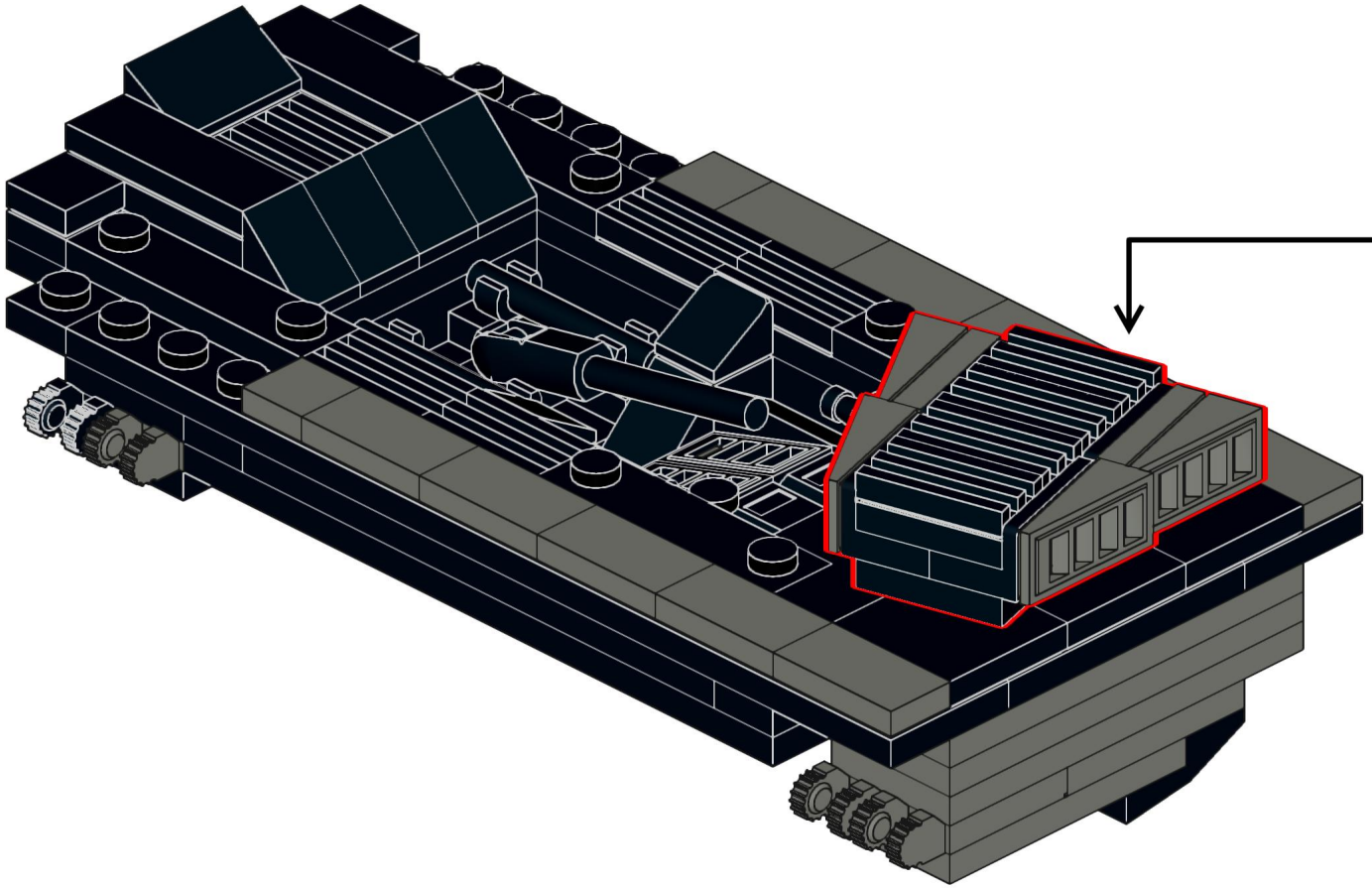

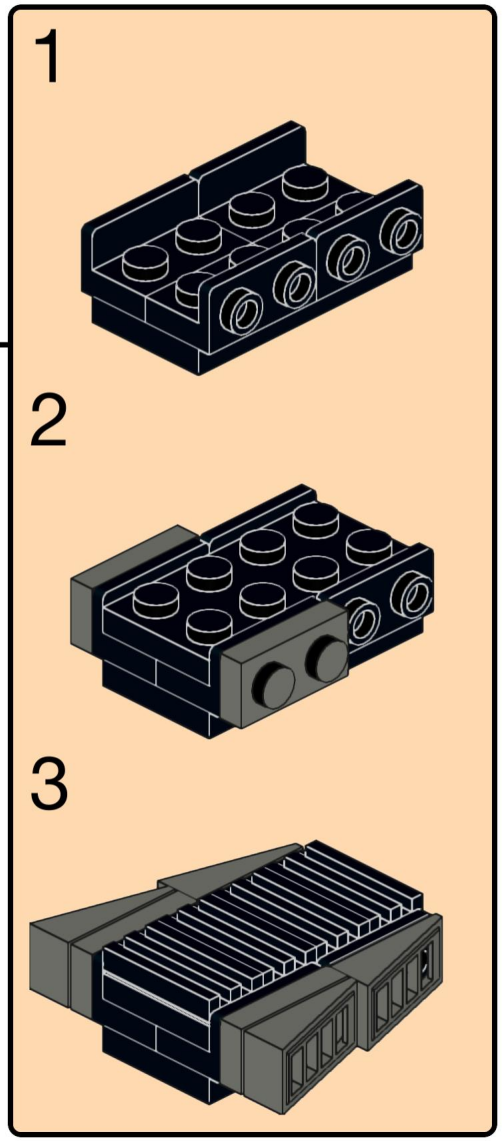

Designed by Michael Gertsch

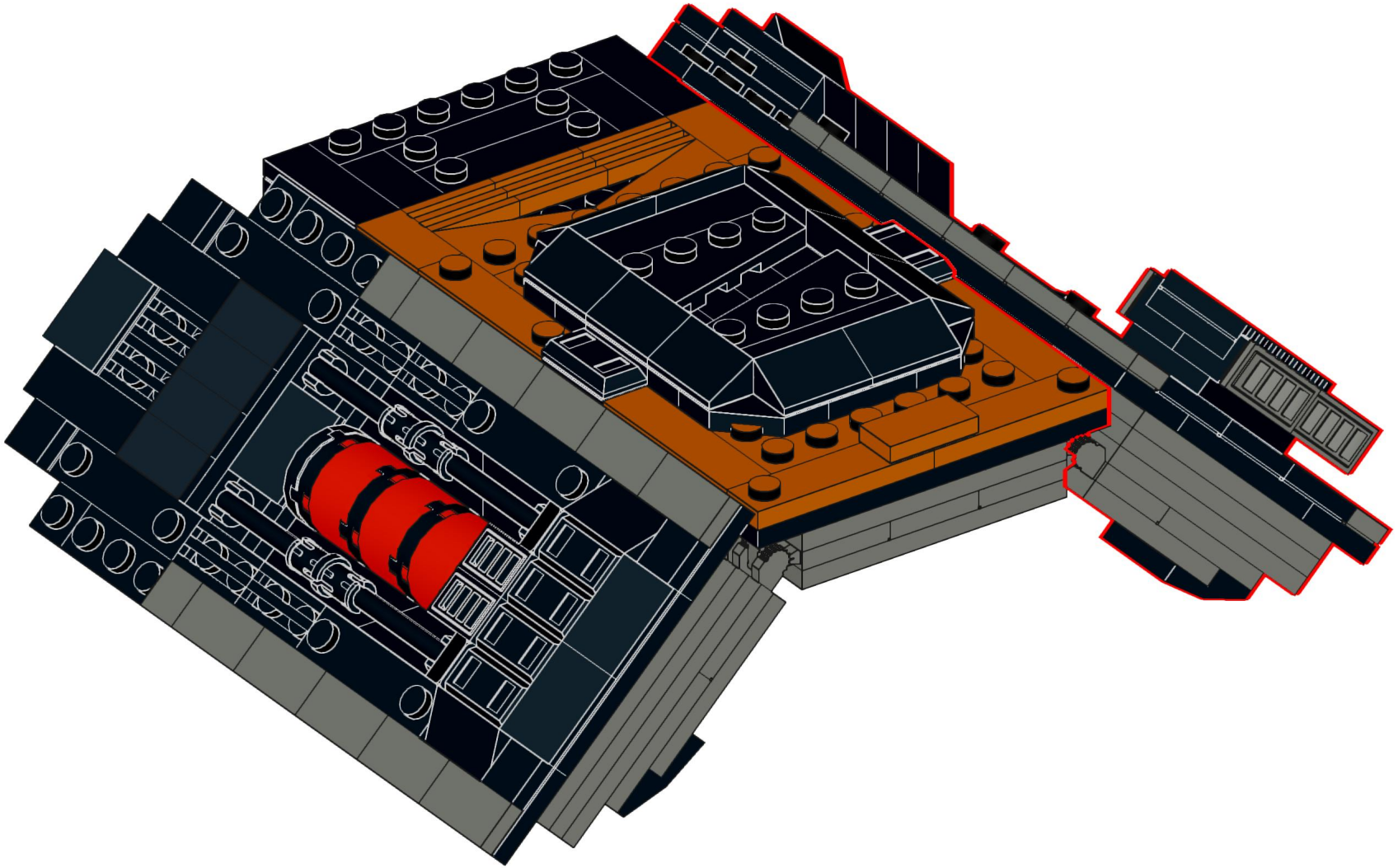

Designed by Michael Gertsch

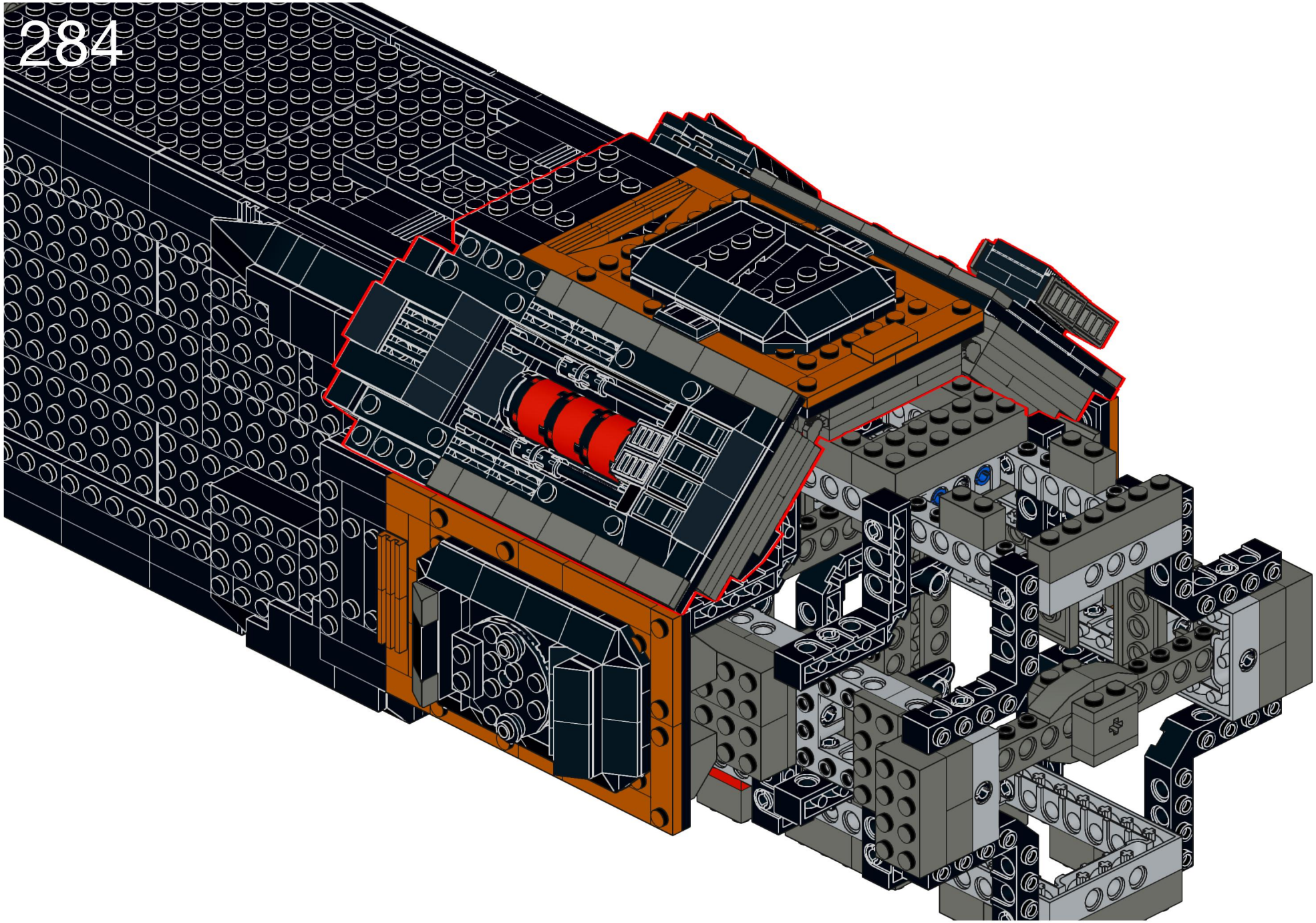

Designed by Michael Gertsch

285

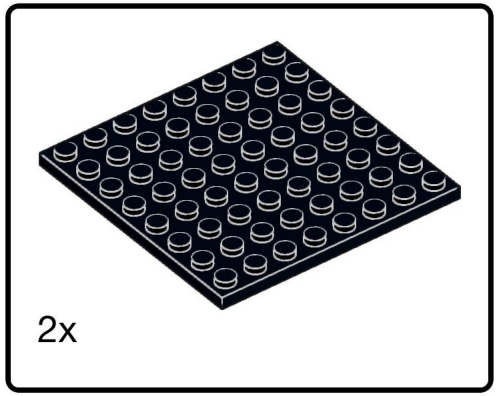

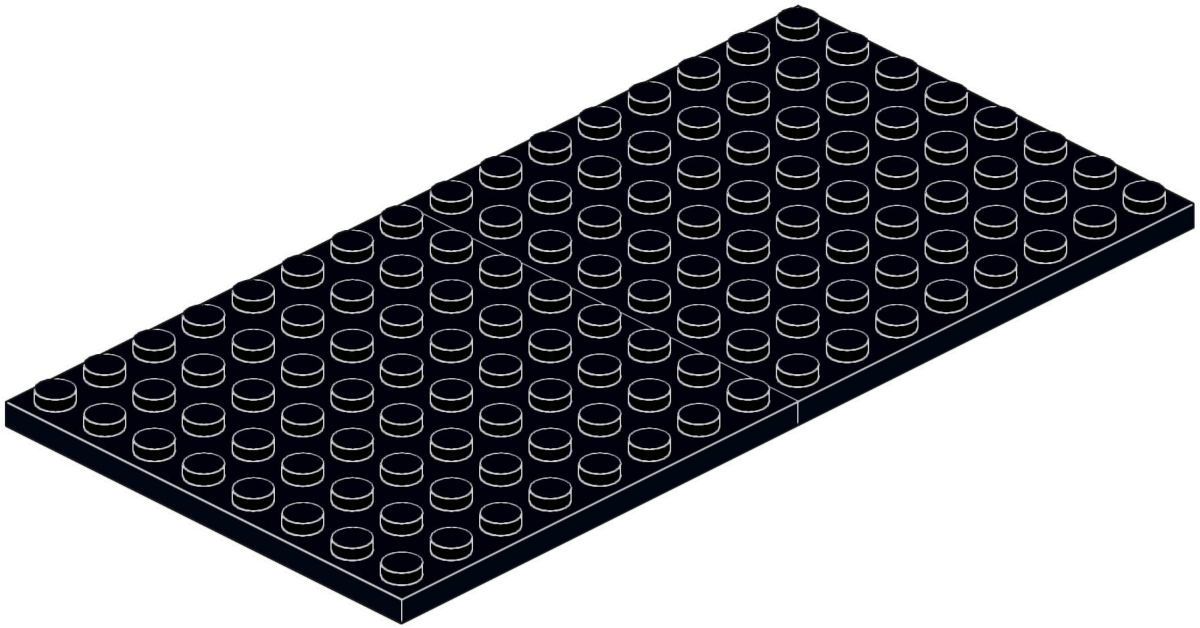

286

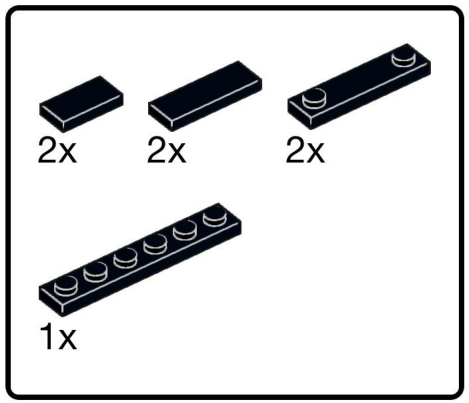

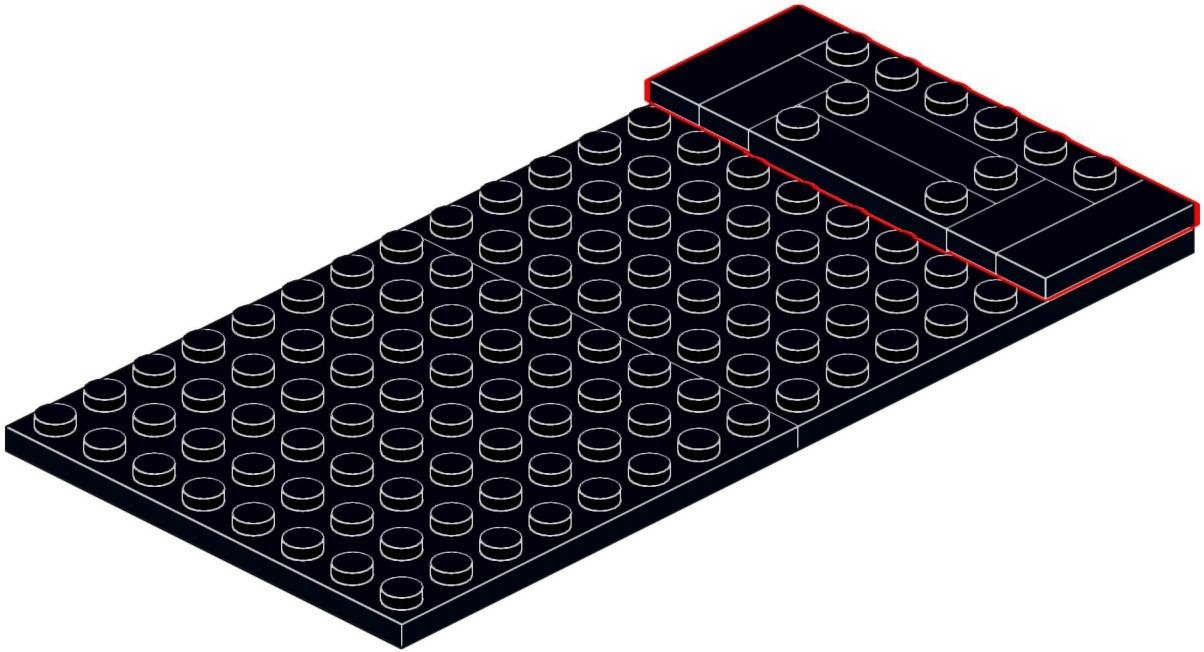

Designed by Michael Gertsch

287

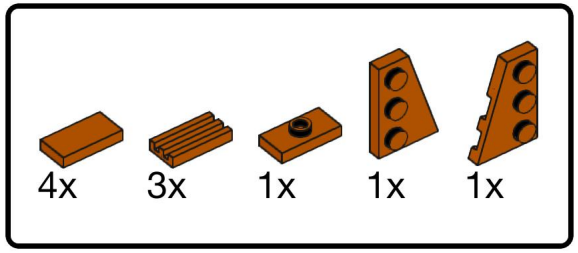

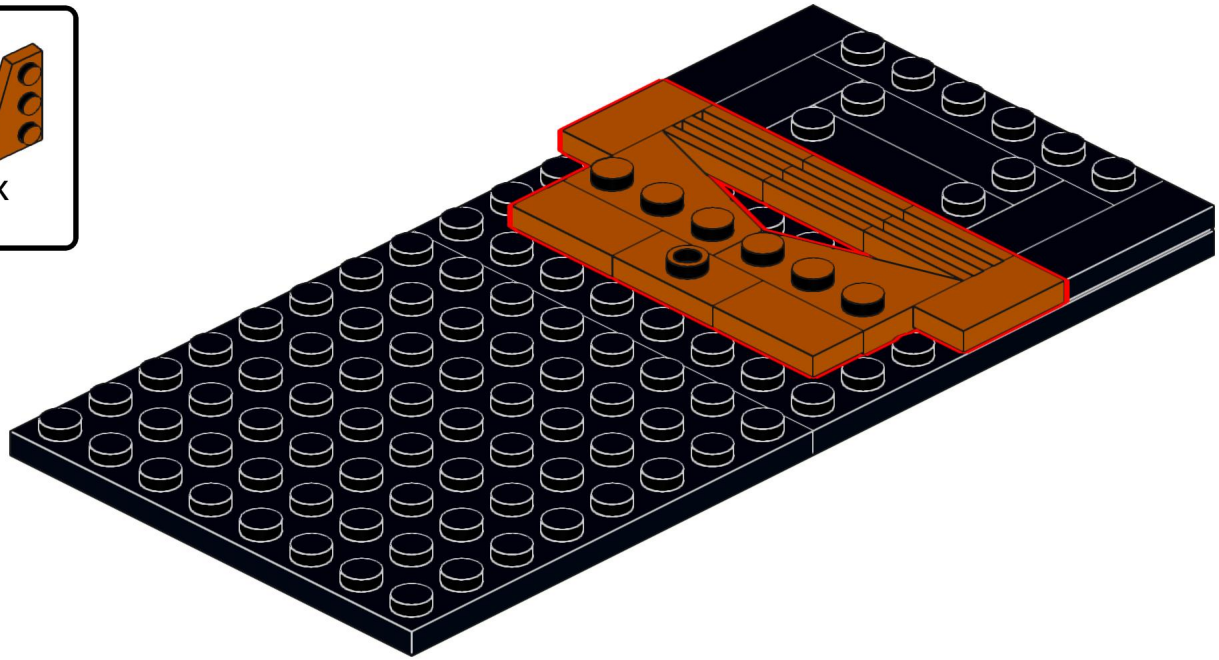

288

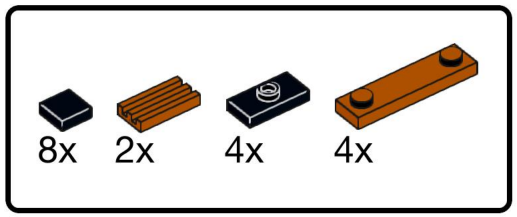

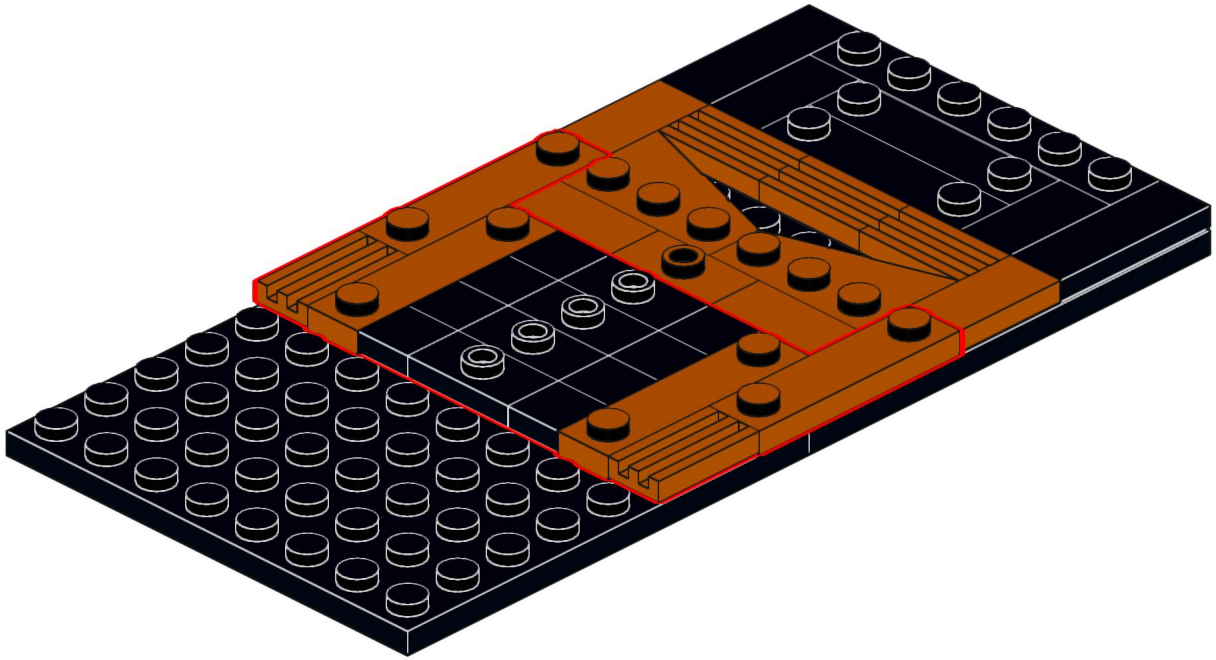

Designed by Michael Gertsch

289

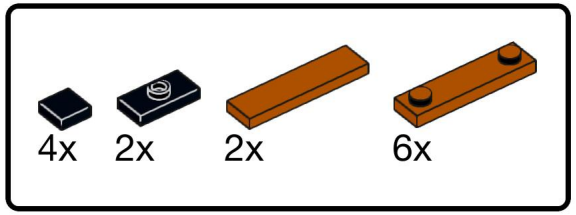

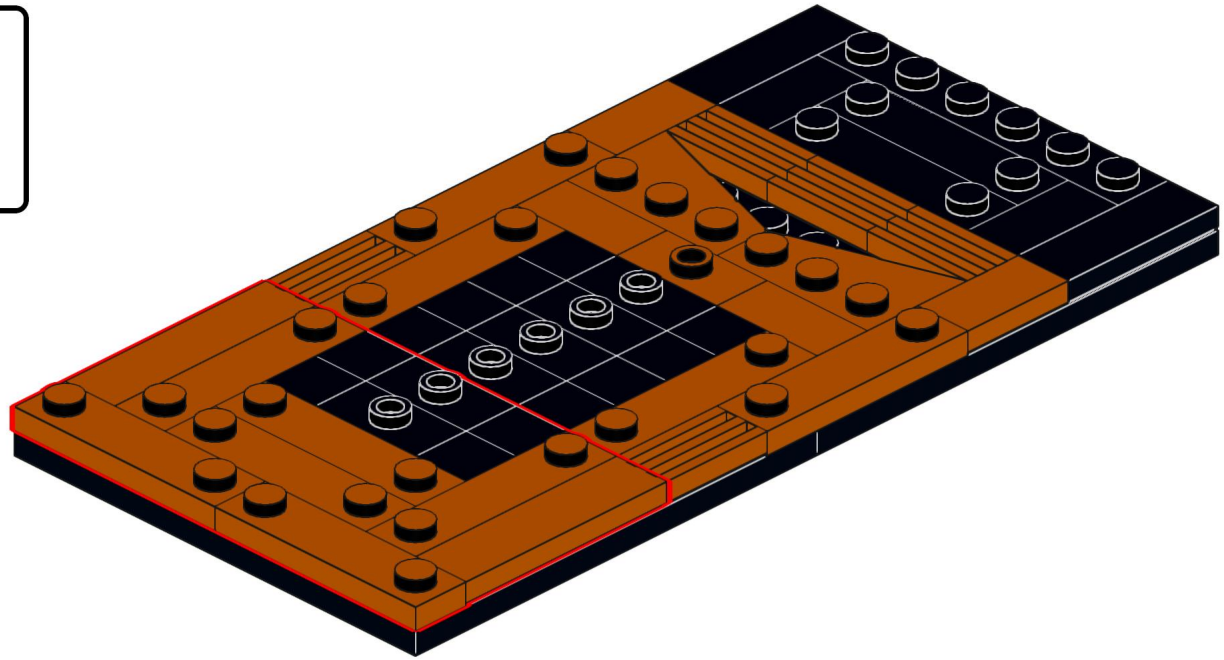

290

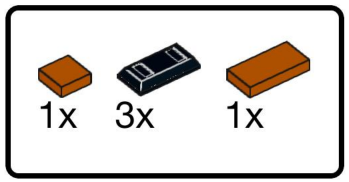

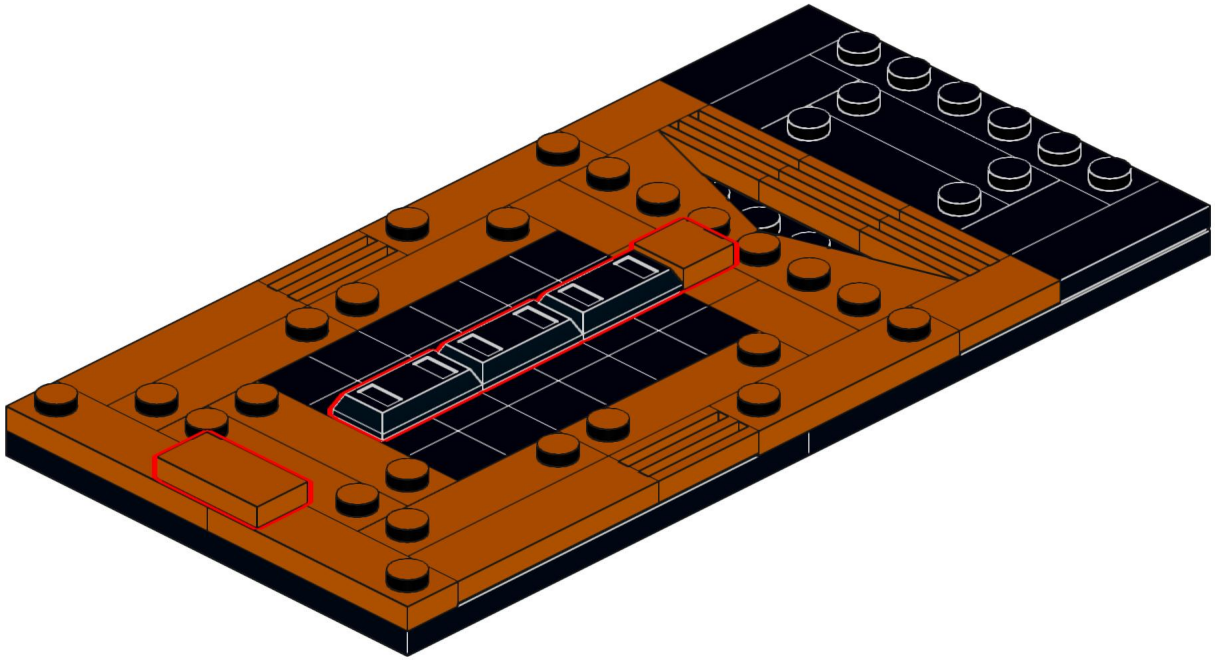

Designed by Michael Gertsch

291

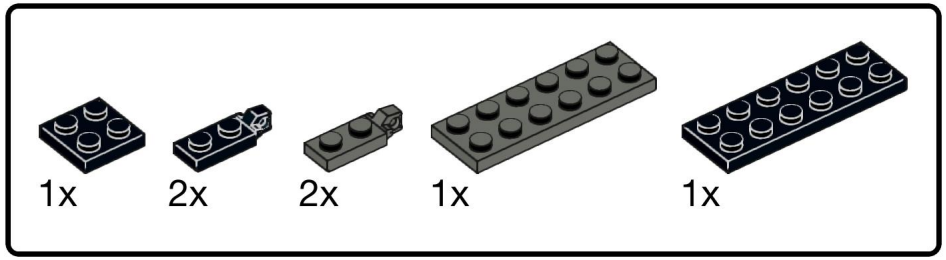

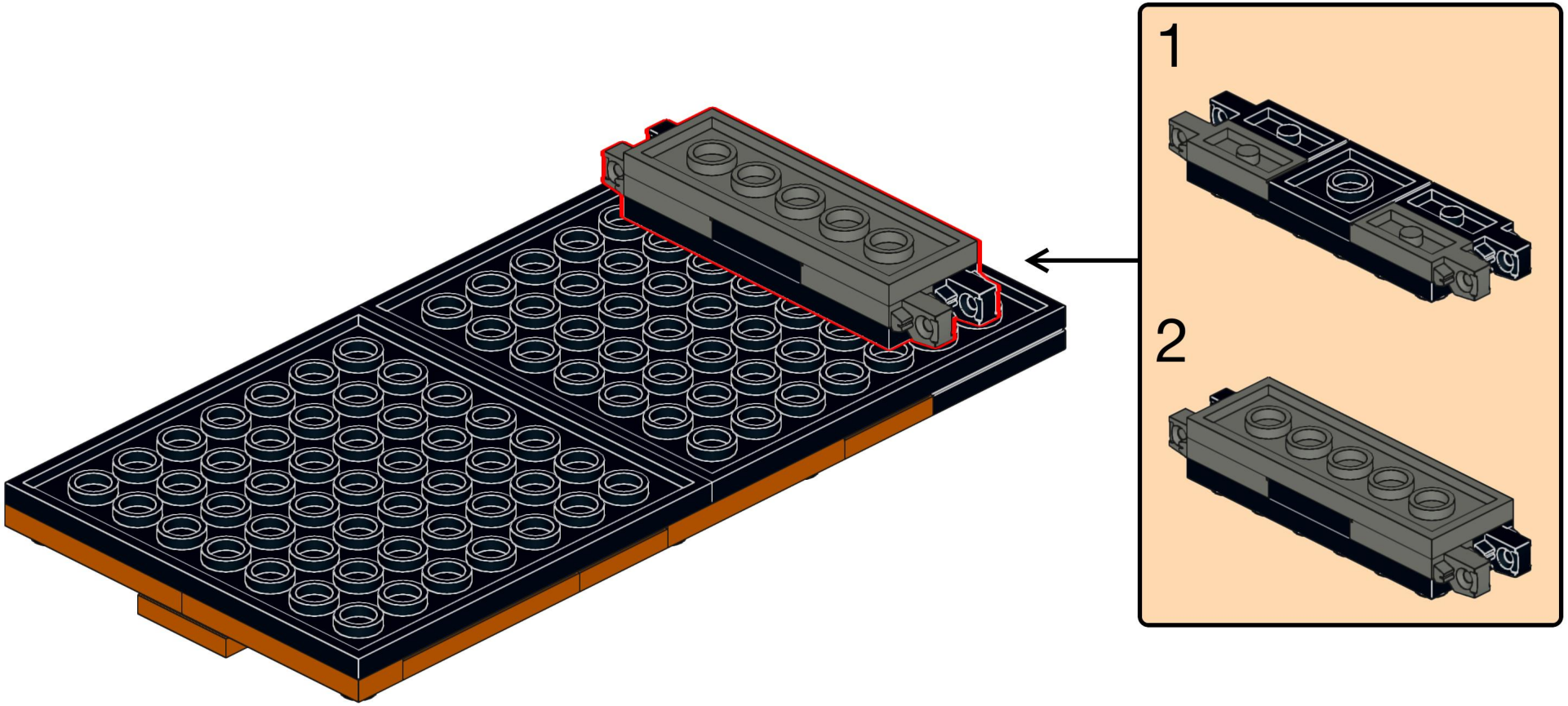

Designed by Michael Gertsch

292

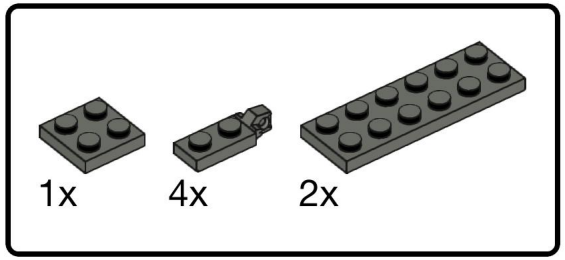

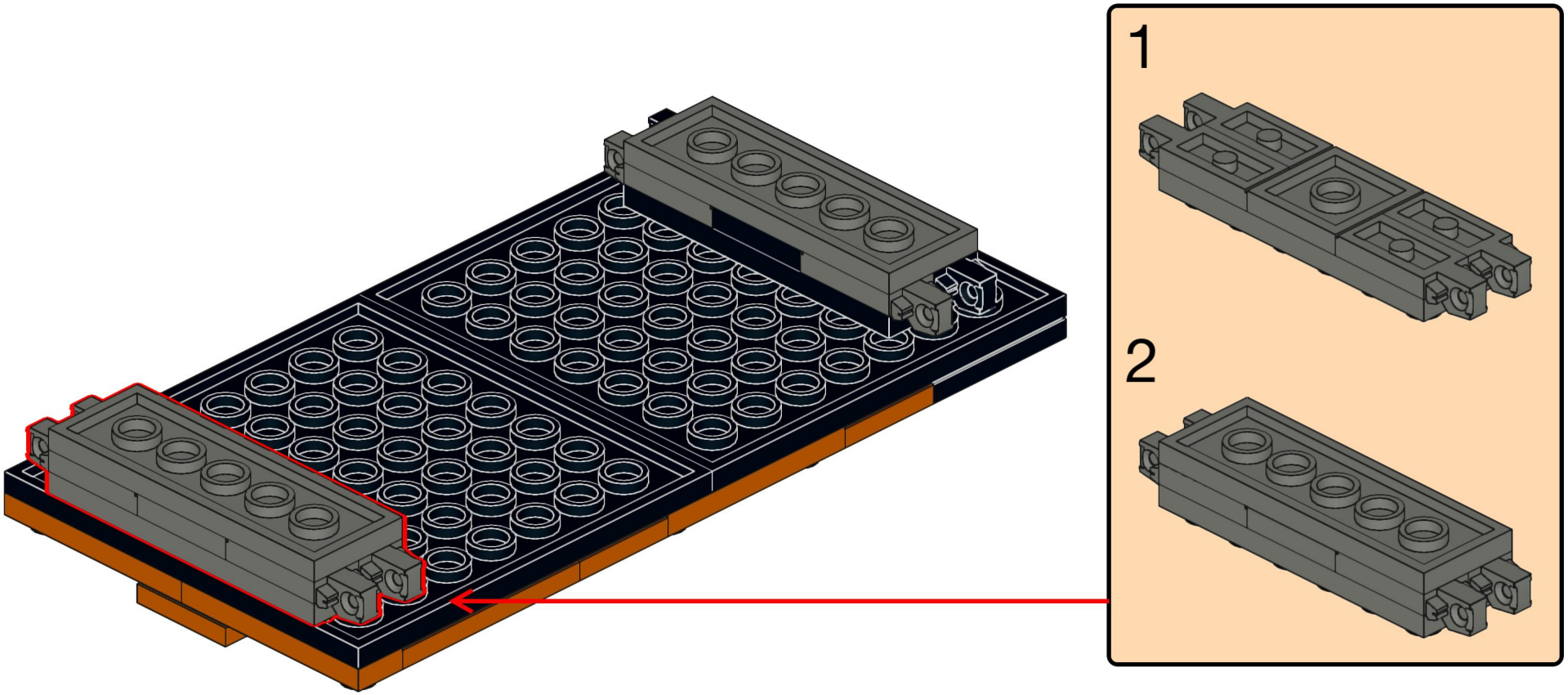

Designed by Michael Gertsch

293

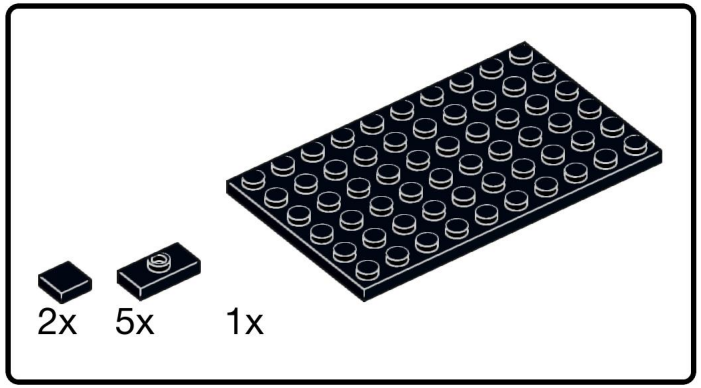

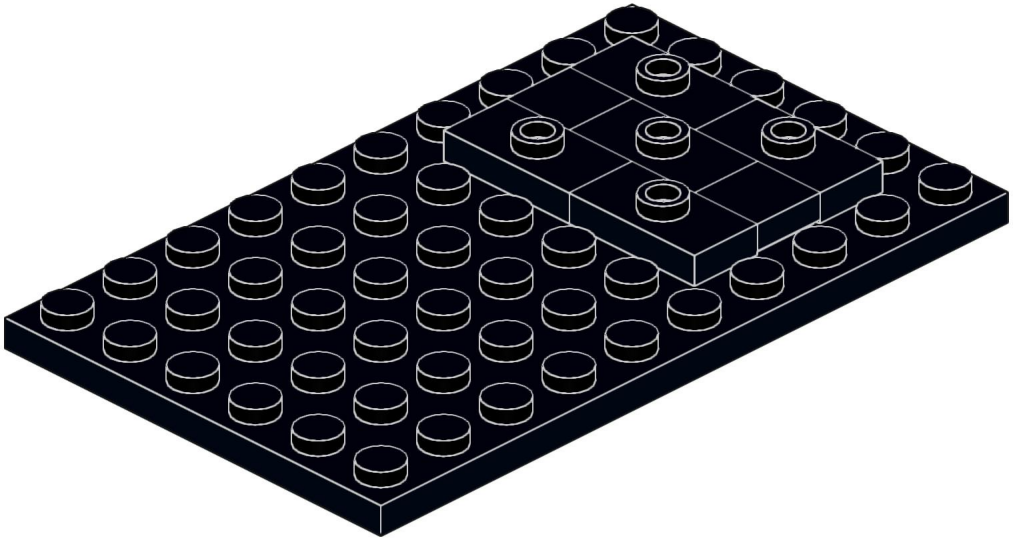

294

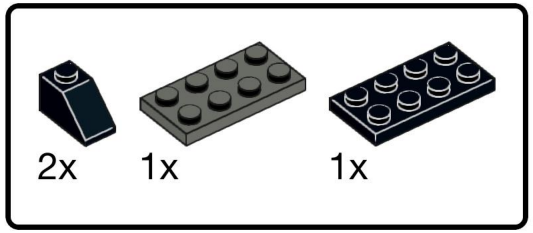

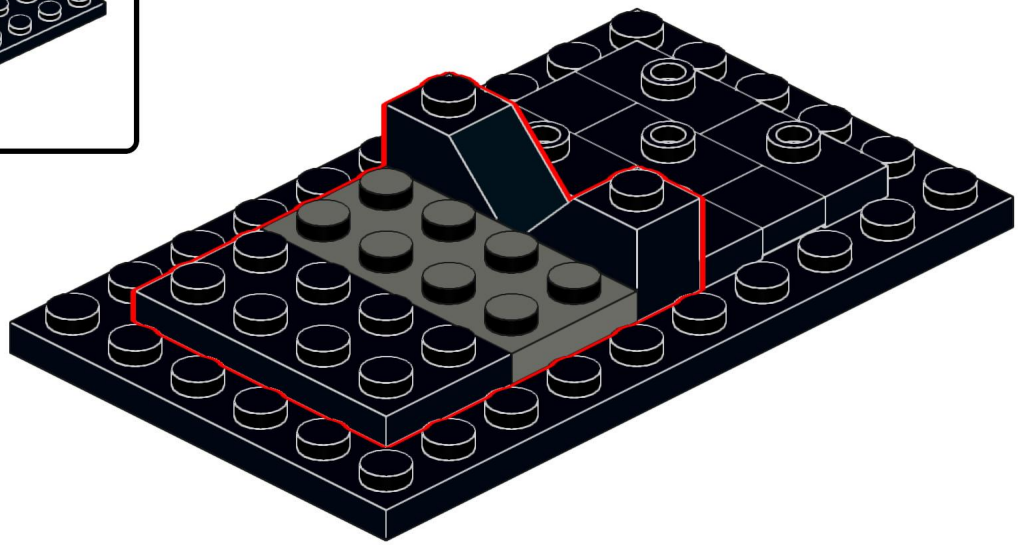

Designed by Michael Gertsch

295

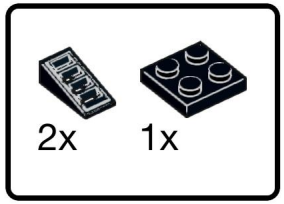

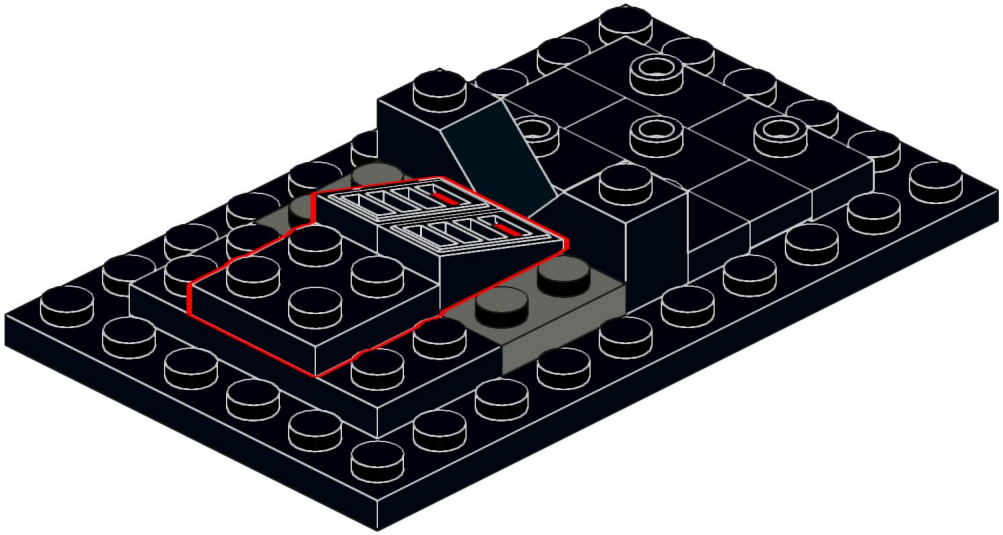

296

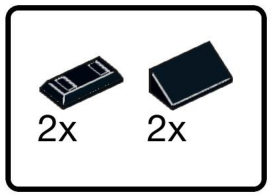

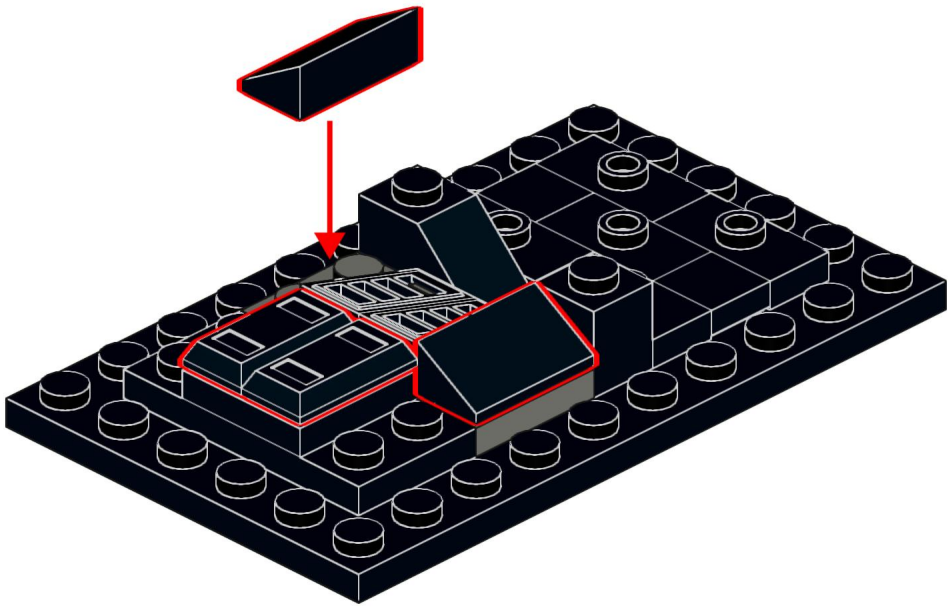

Designed by Michael Gertsch

297

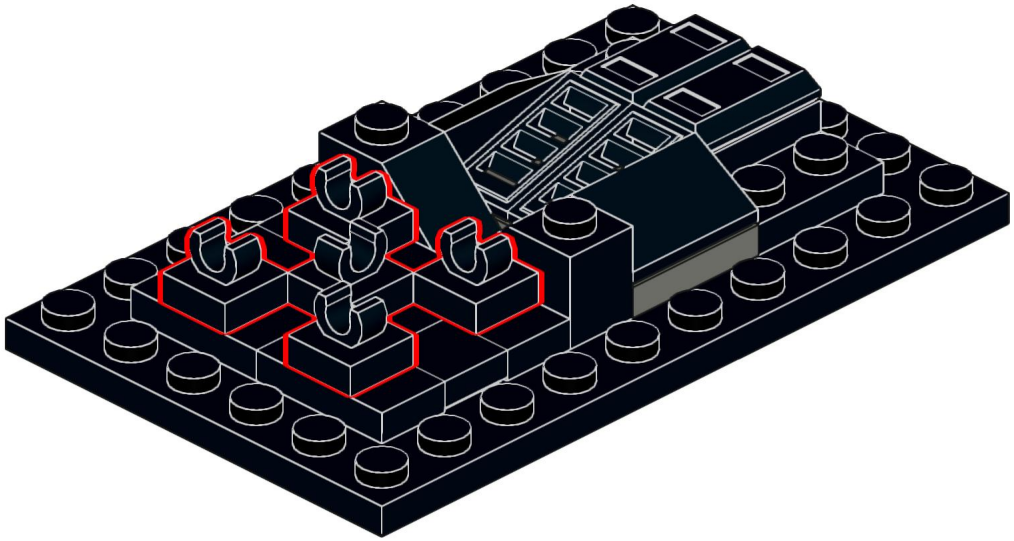

298

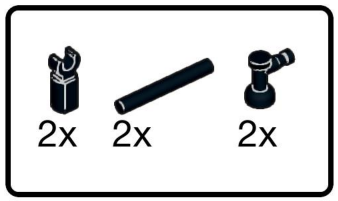

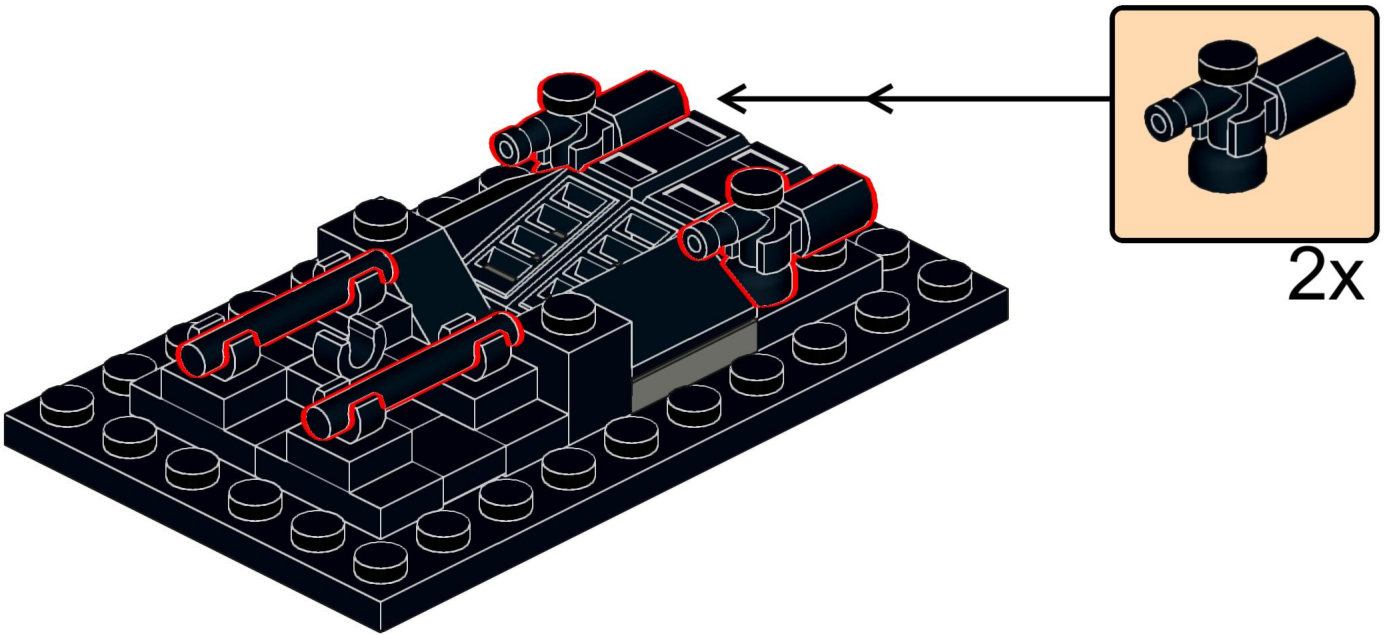

Designed by Michael Gertsch

299

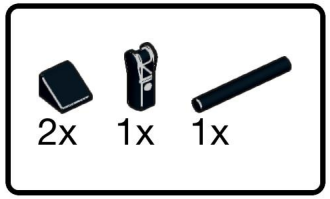

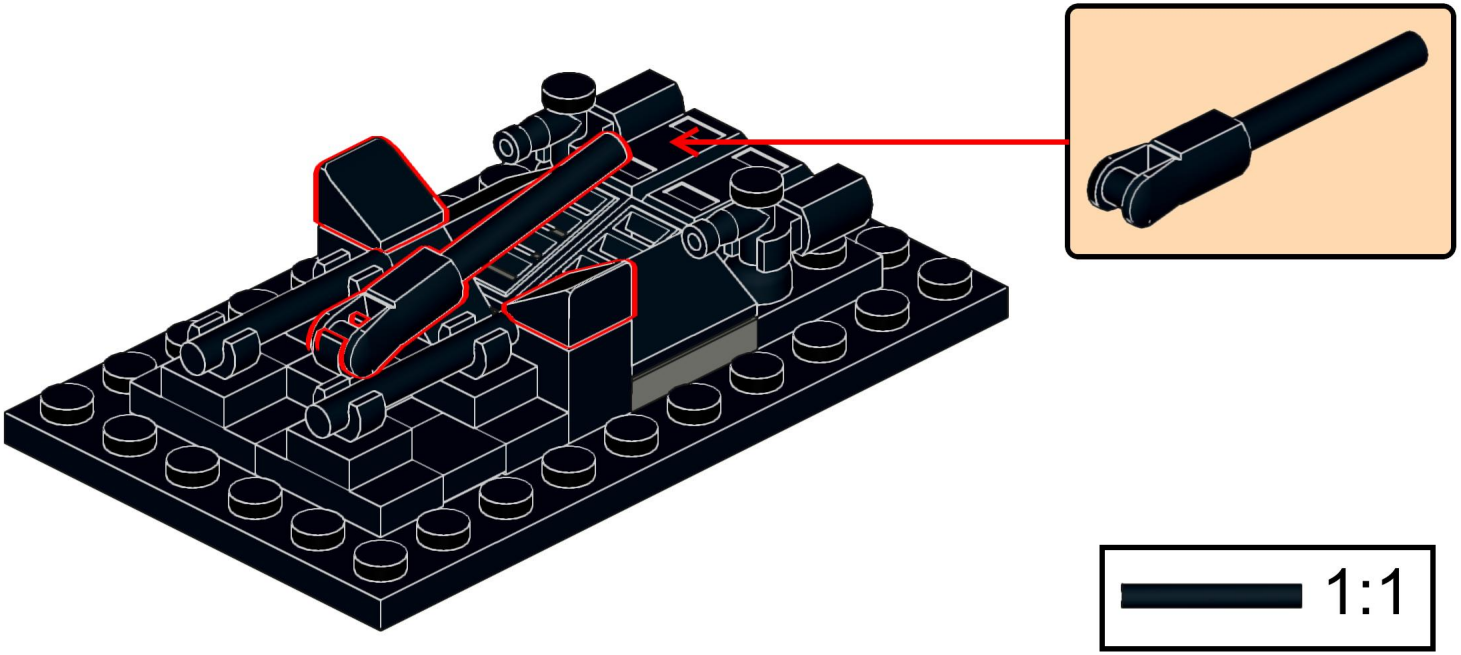

300

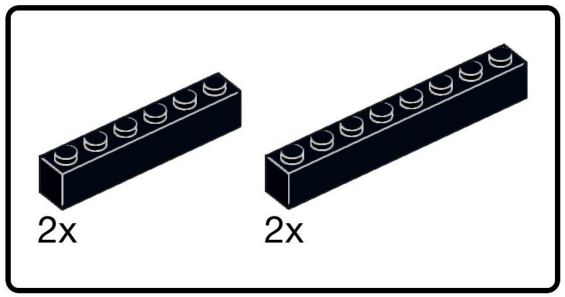

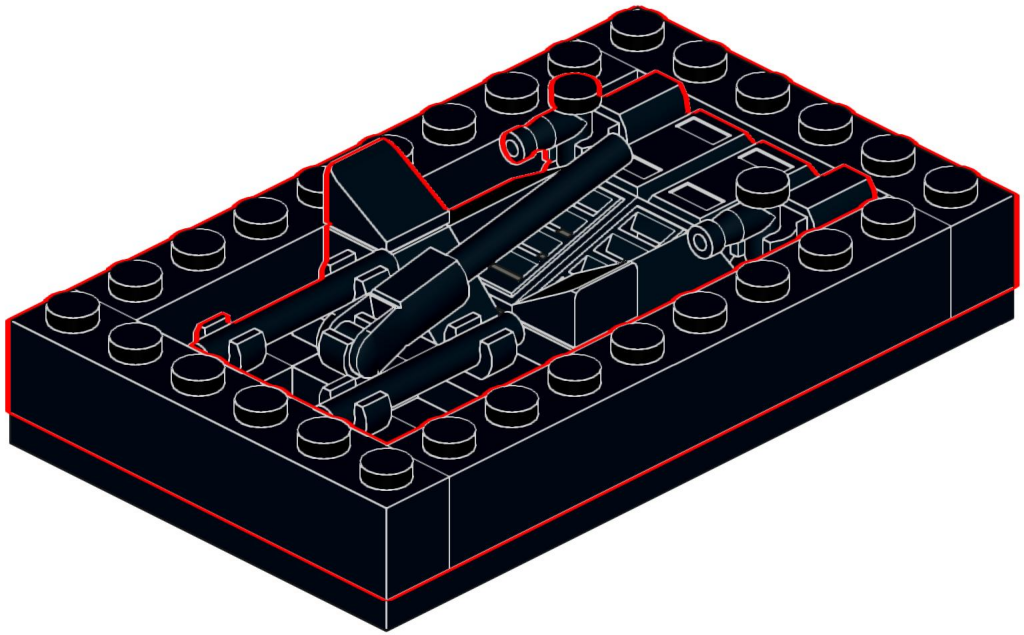

Designed by Michael Gertsch

301

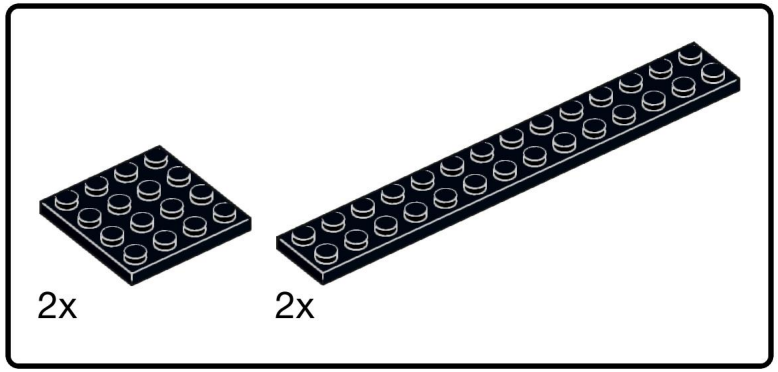

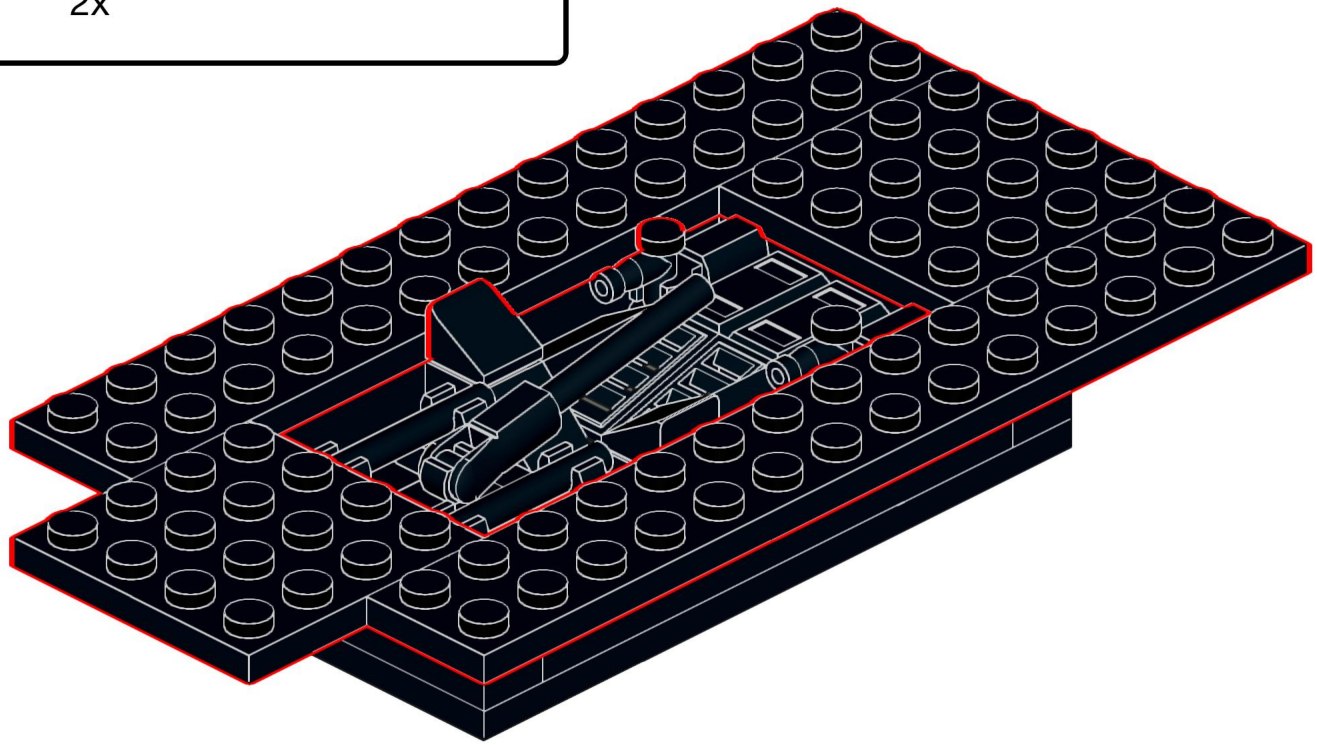

Designed by Michael Gertsch

302

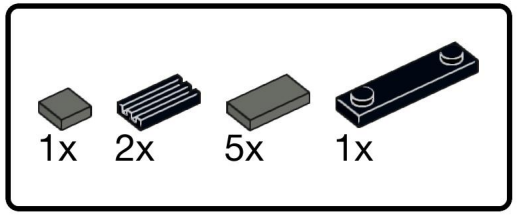

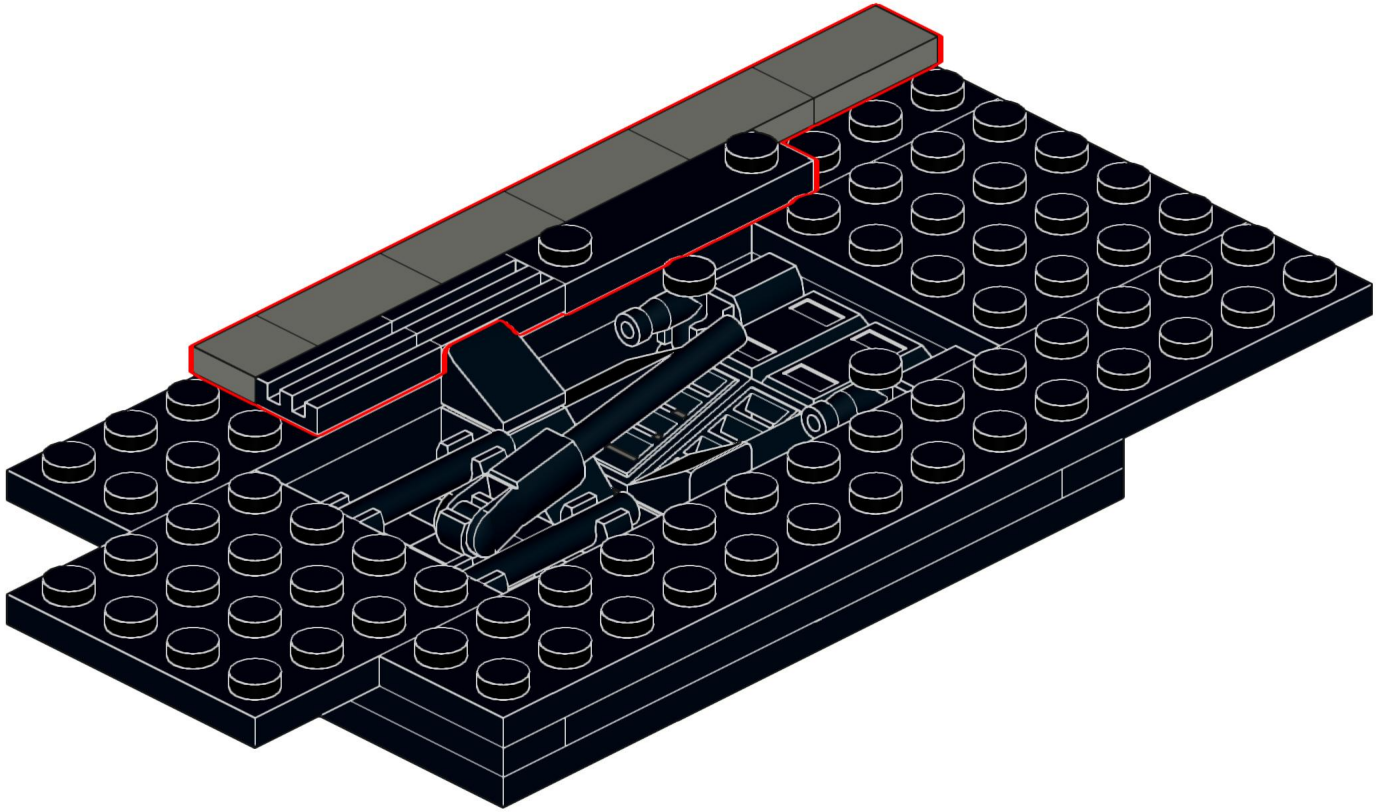

Designed by Michael Gertsch

303

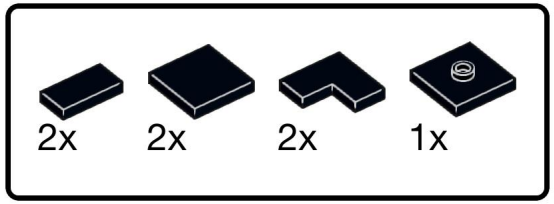

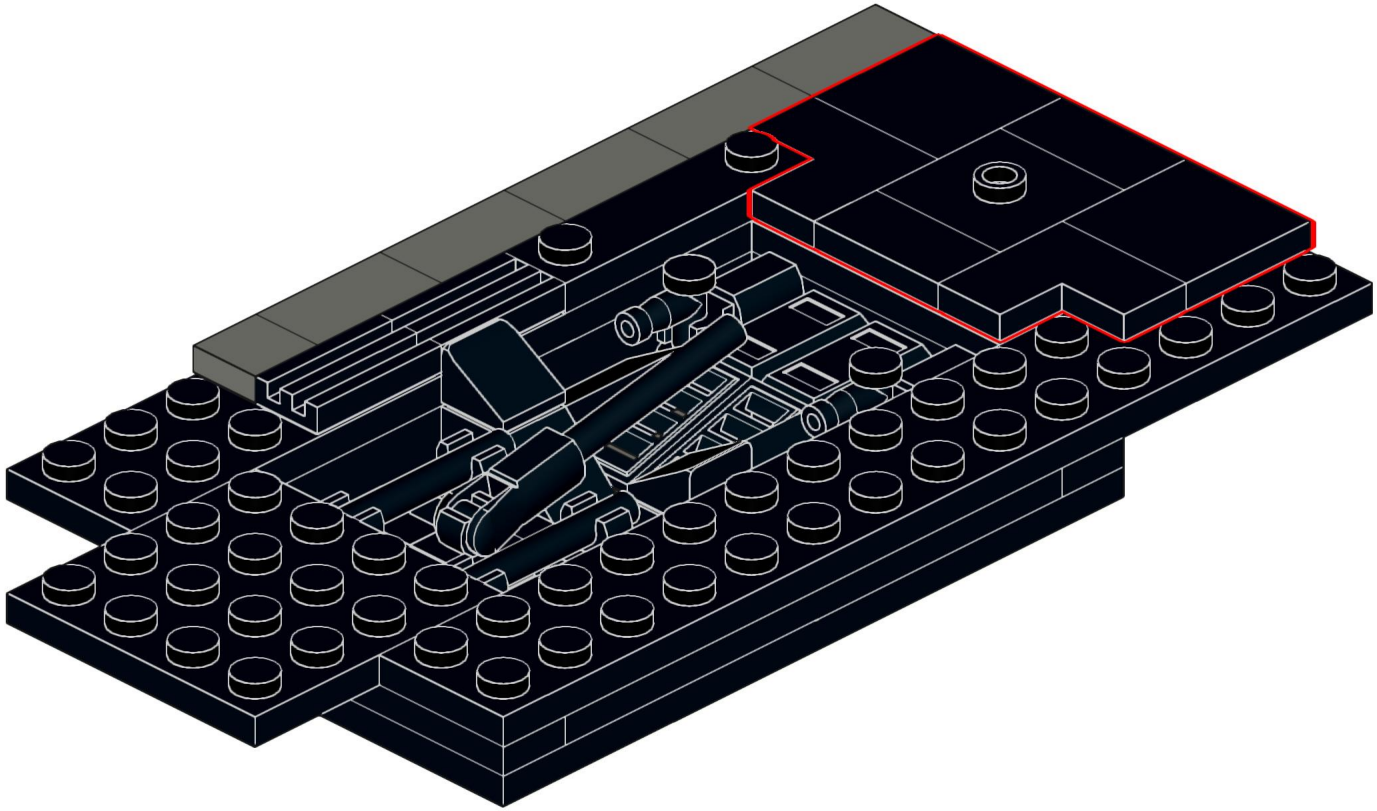

Designed by Michael Gertsch

304

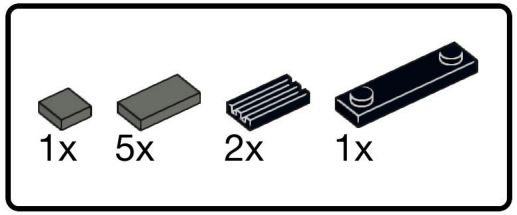

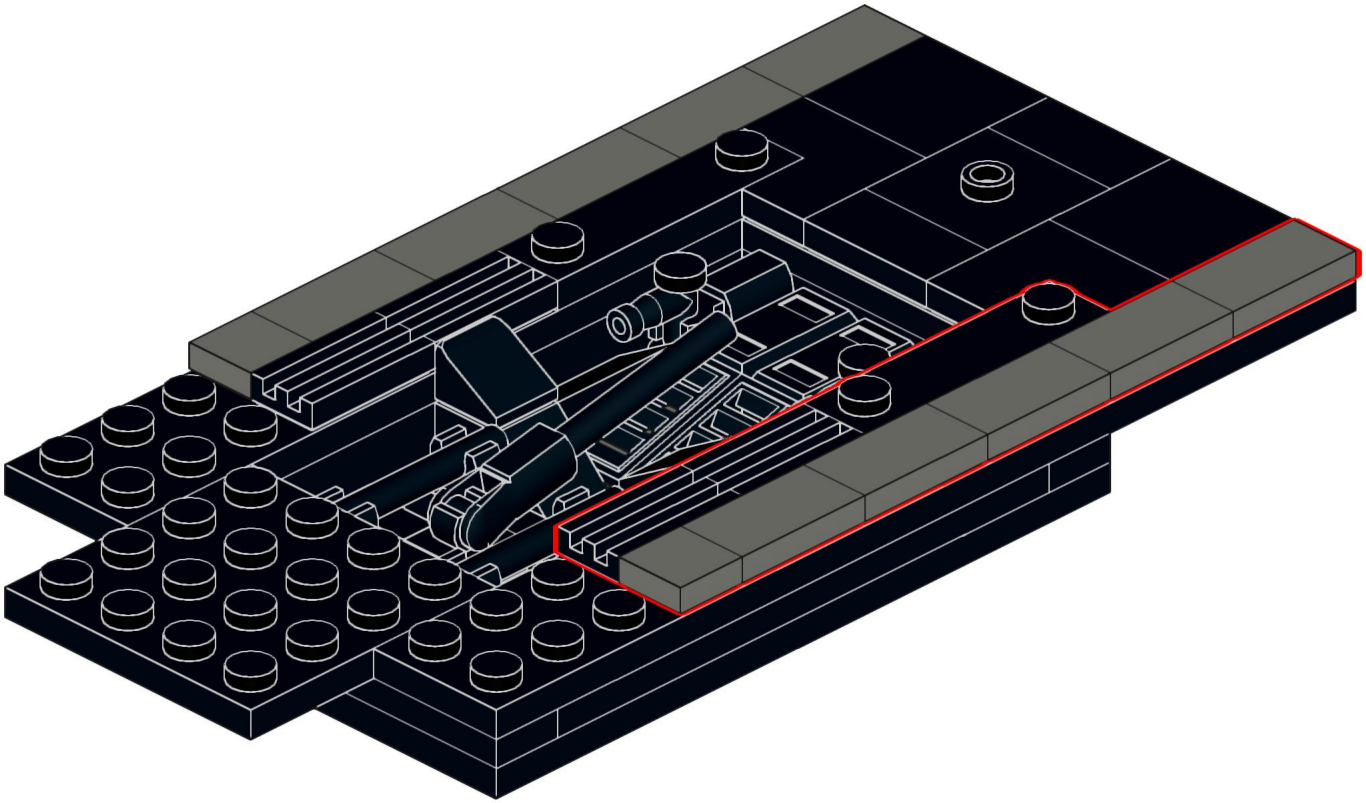

Designed by Michael Gertsch

305

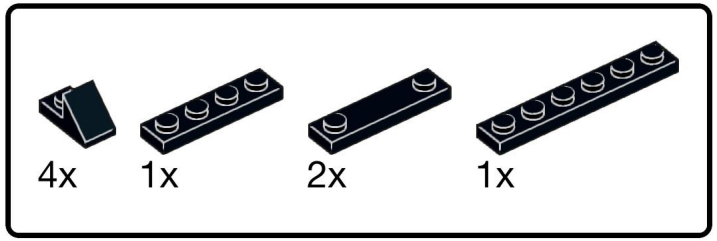

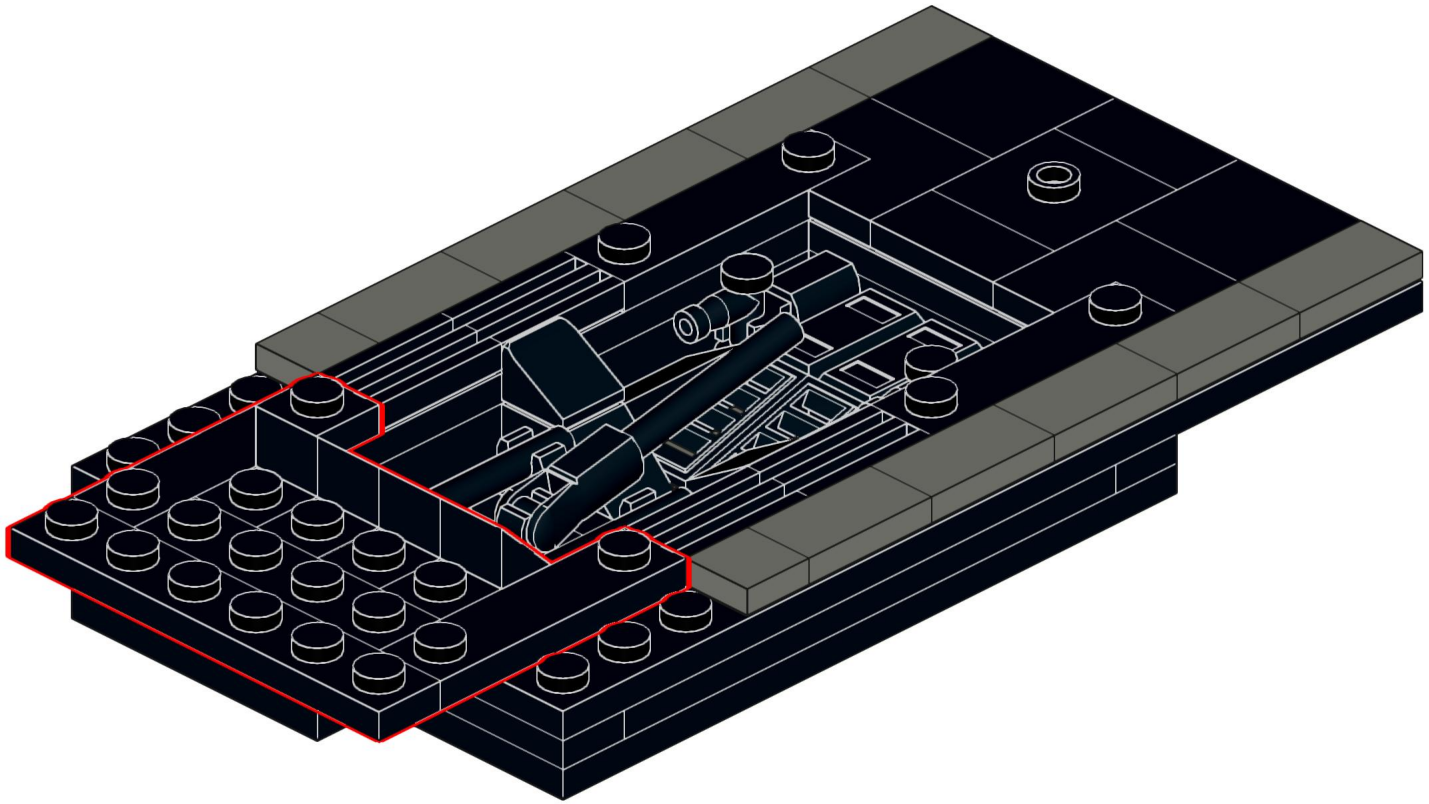

Designed by Michael Gertsch

306

2x

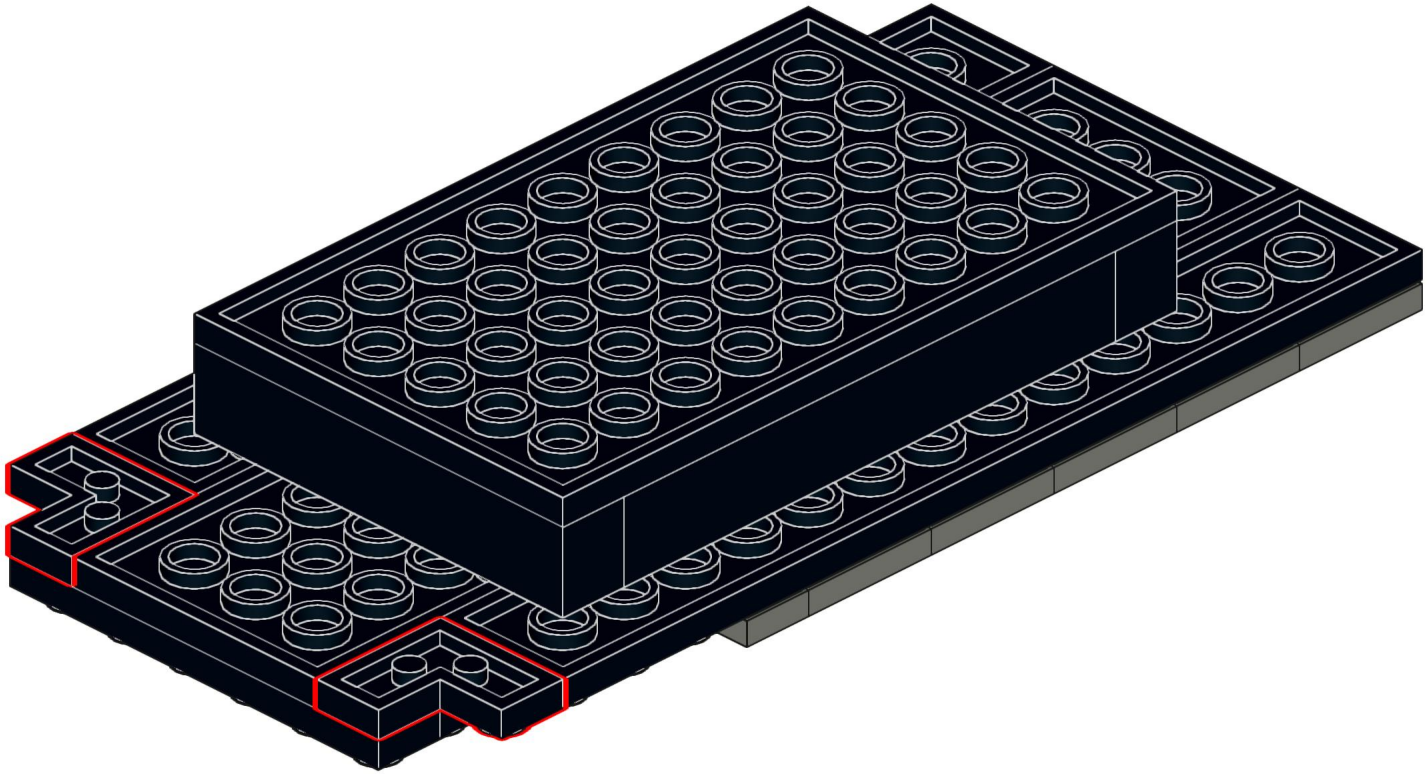

Designed by Michael Gertsch

307

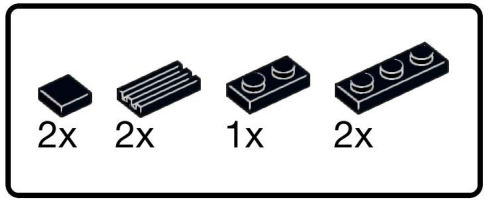

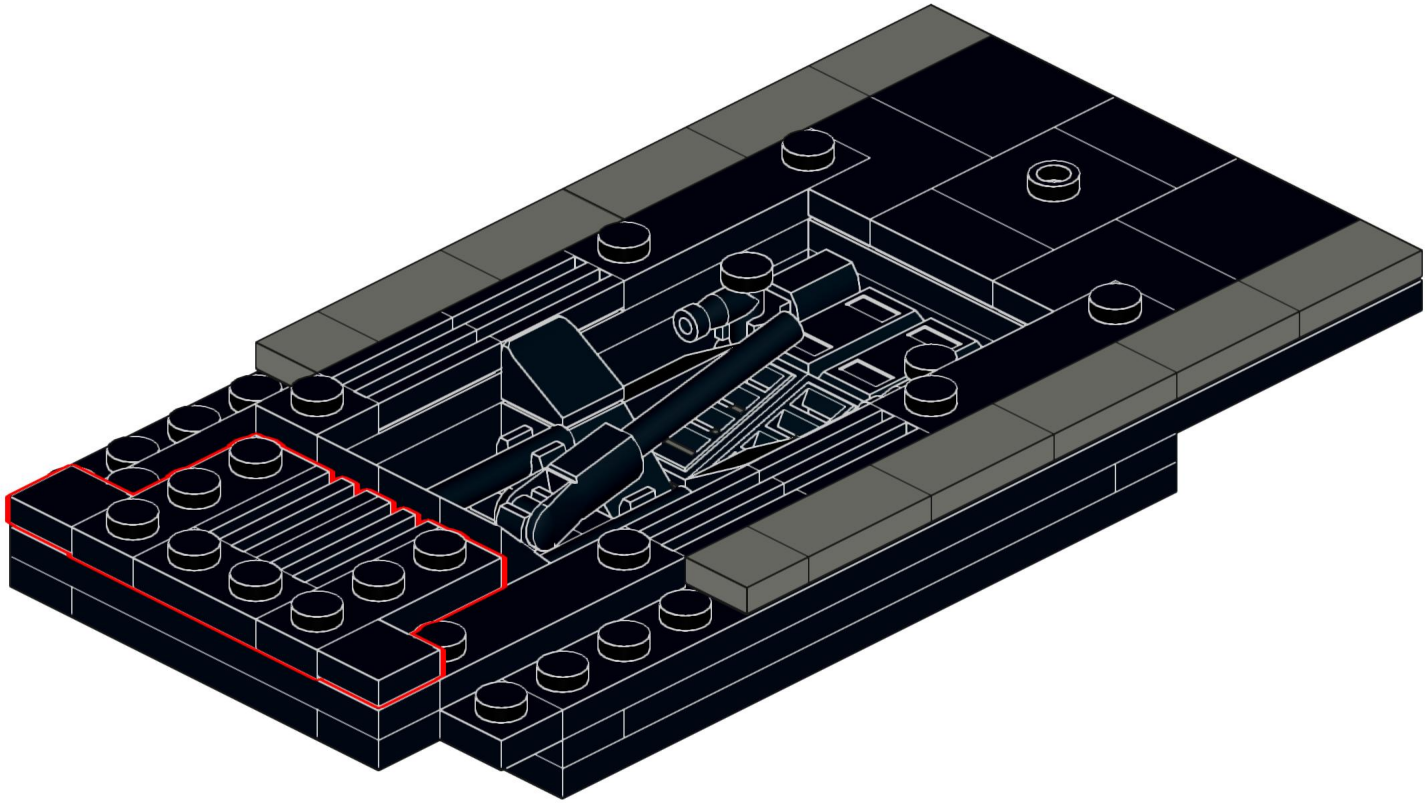

Designed by Michael Gertsch

308

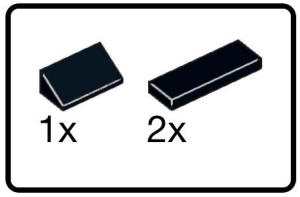

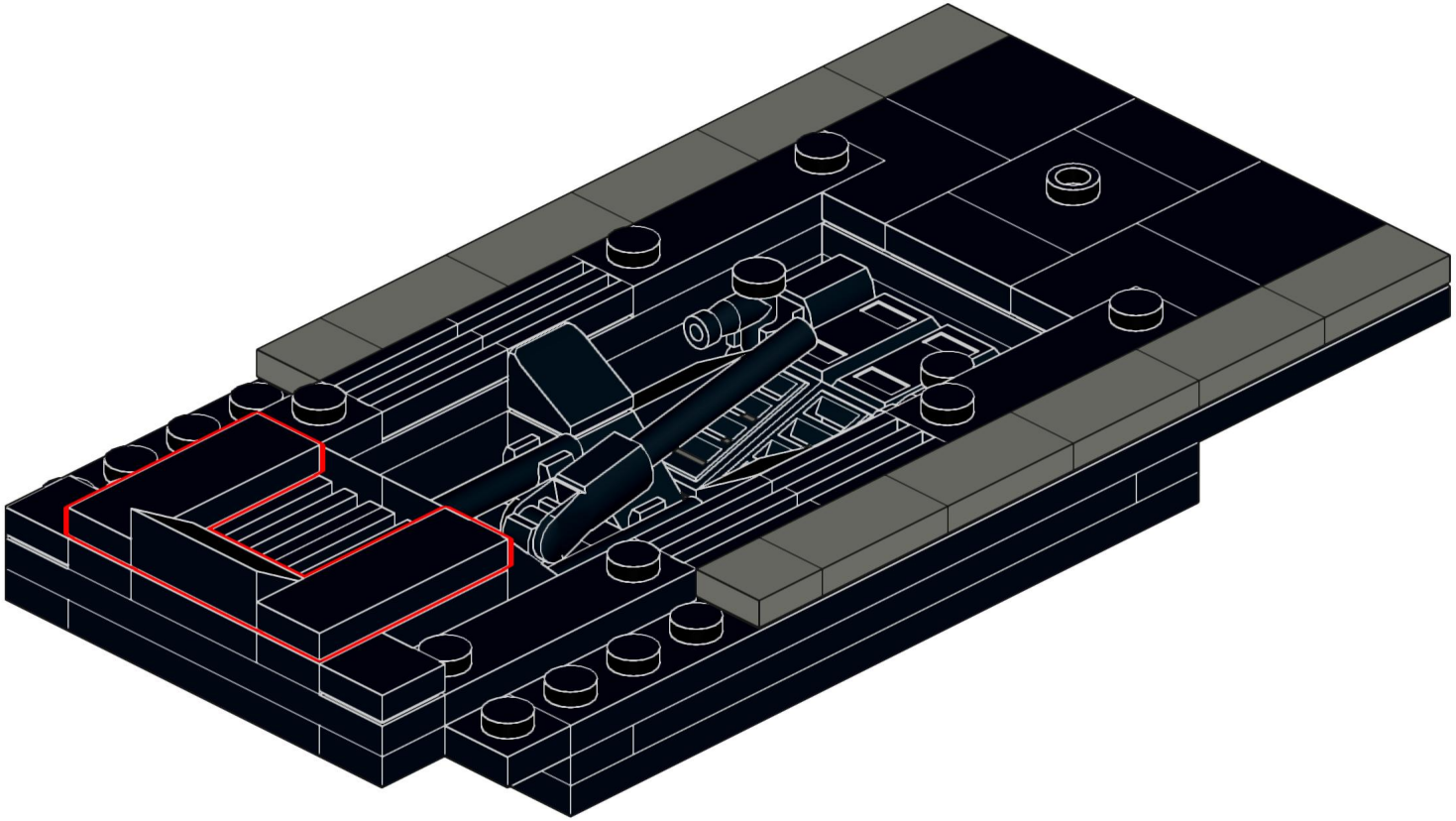

Designed by Michael Gertsch

309

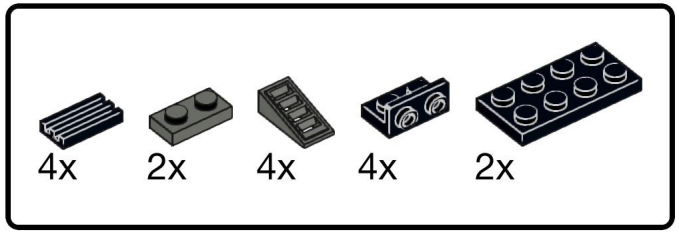

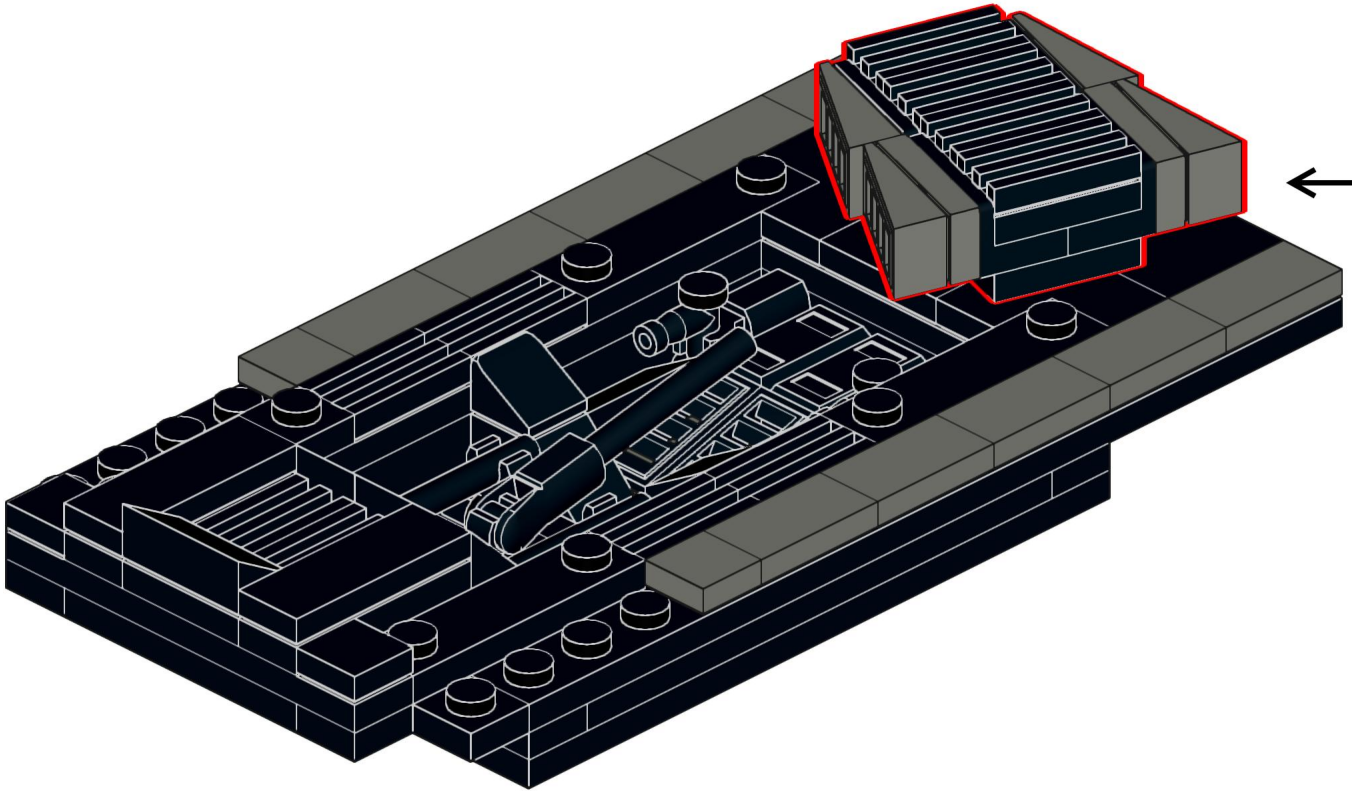

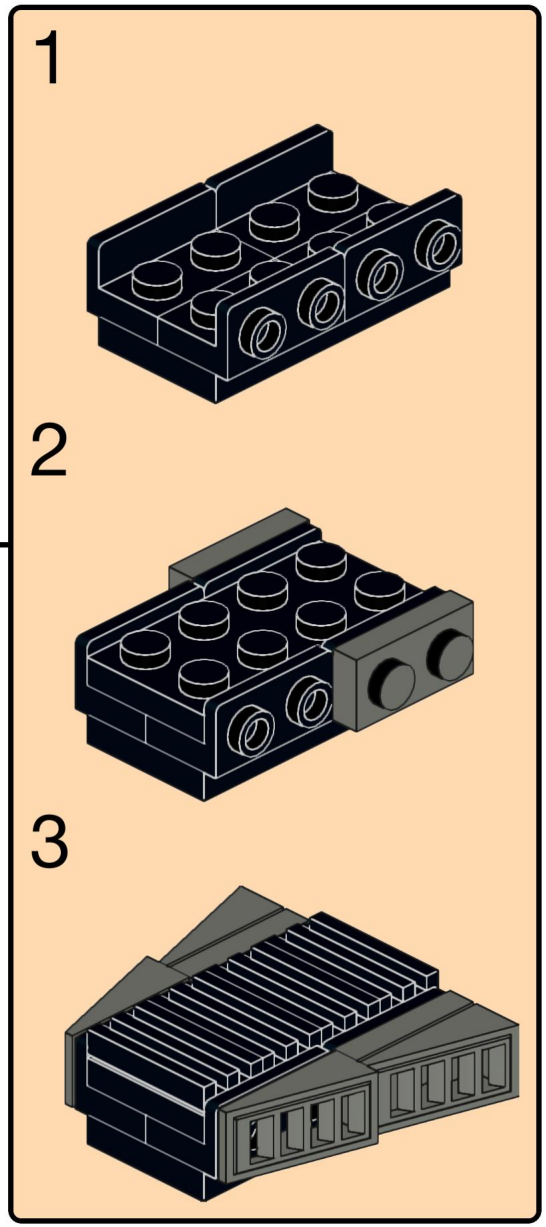

Designed by Michael Gertsch

310

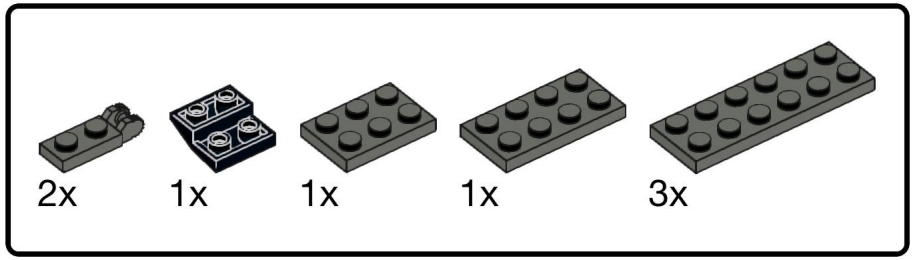

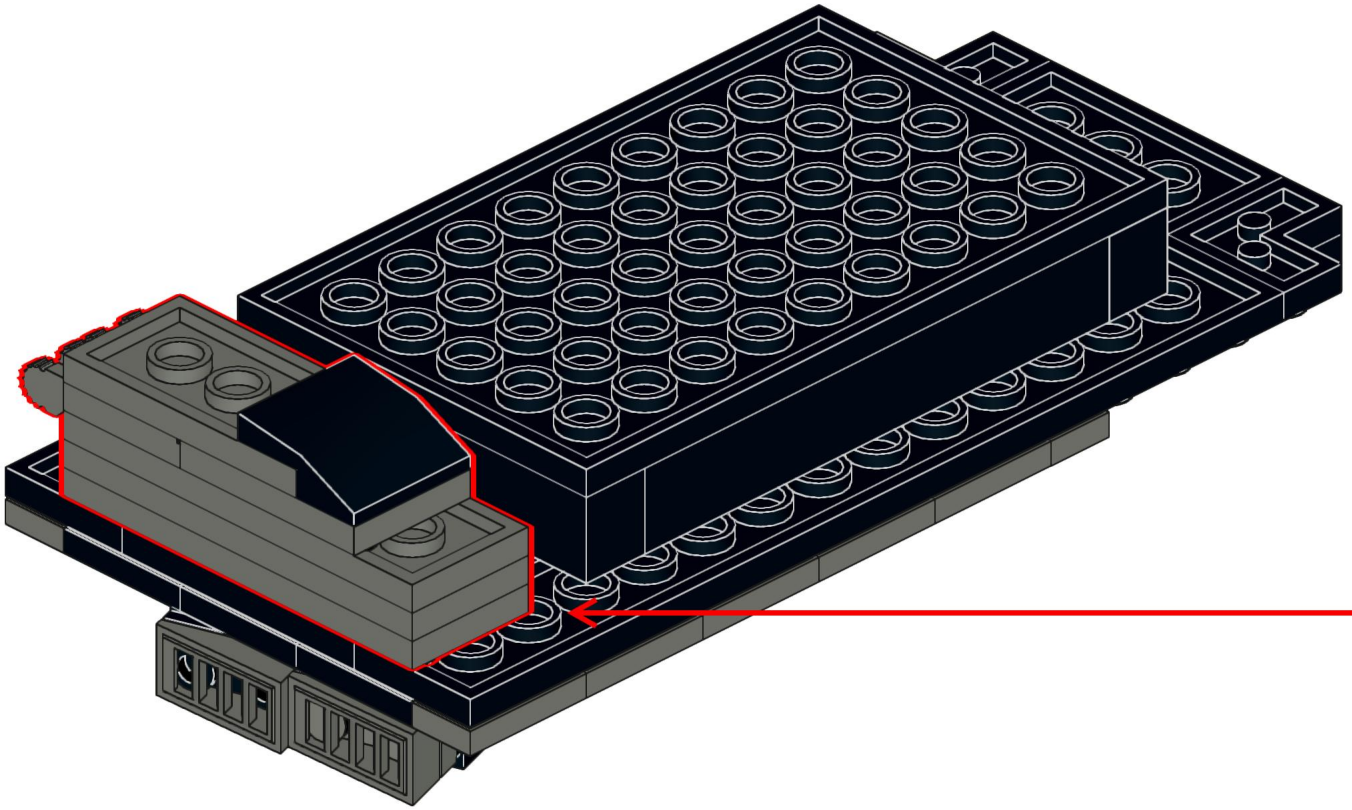

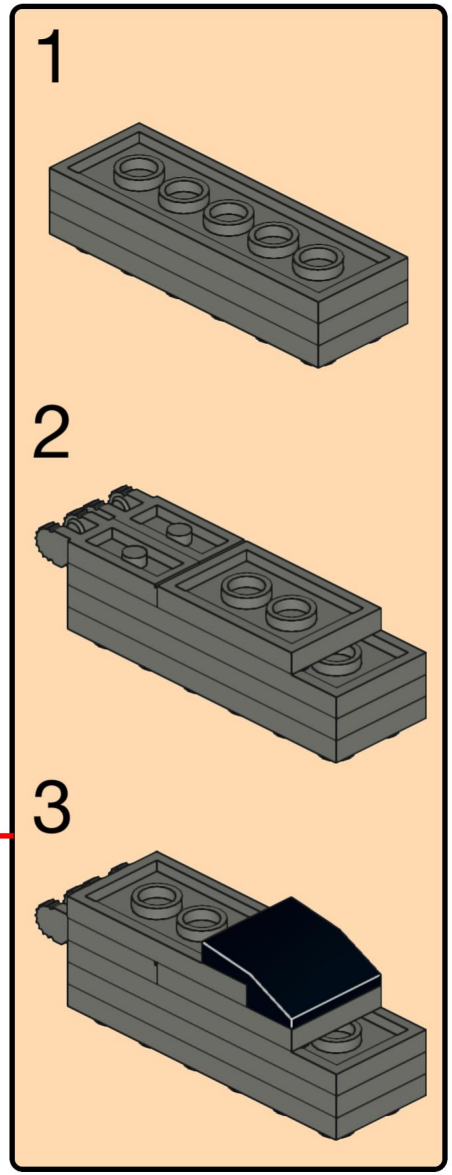

Designed by Michael Gertsch

311

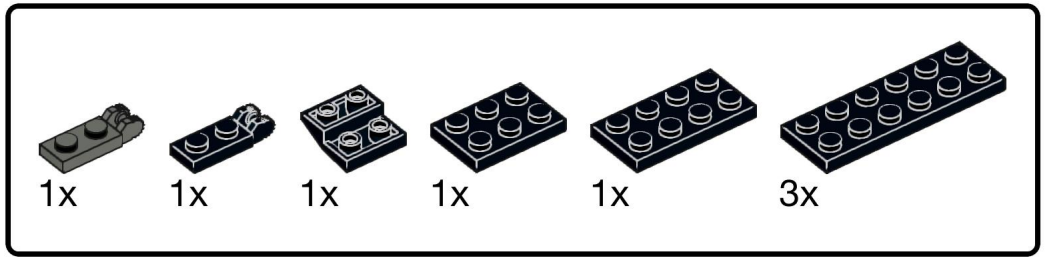

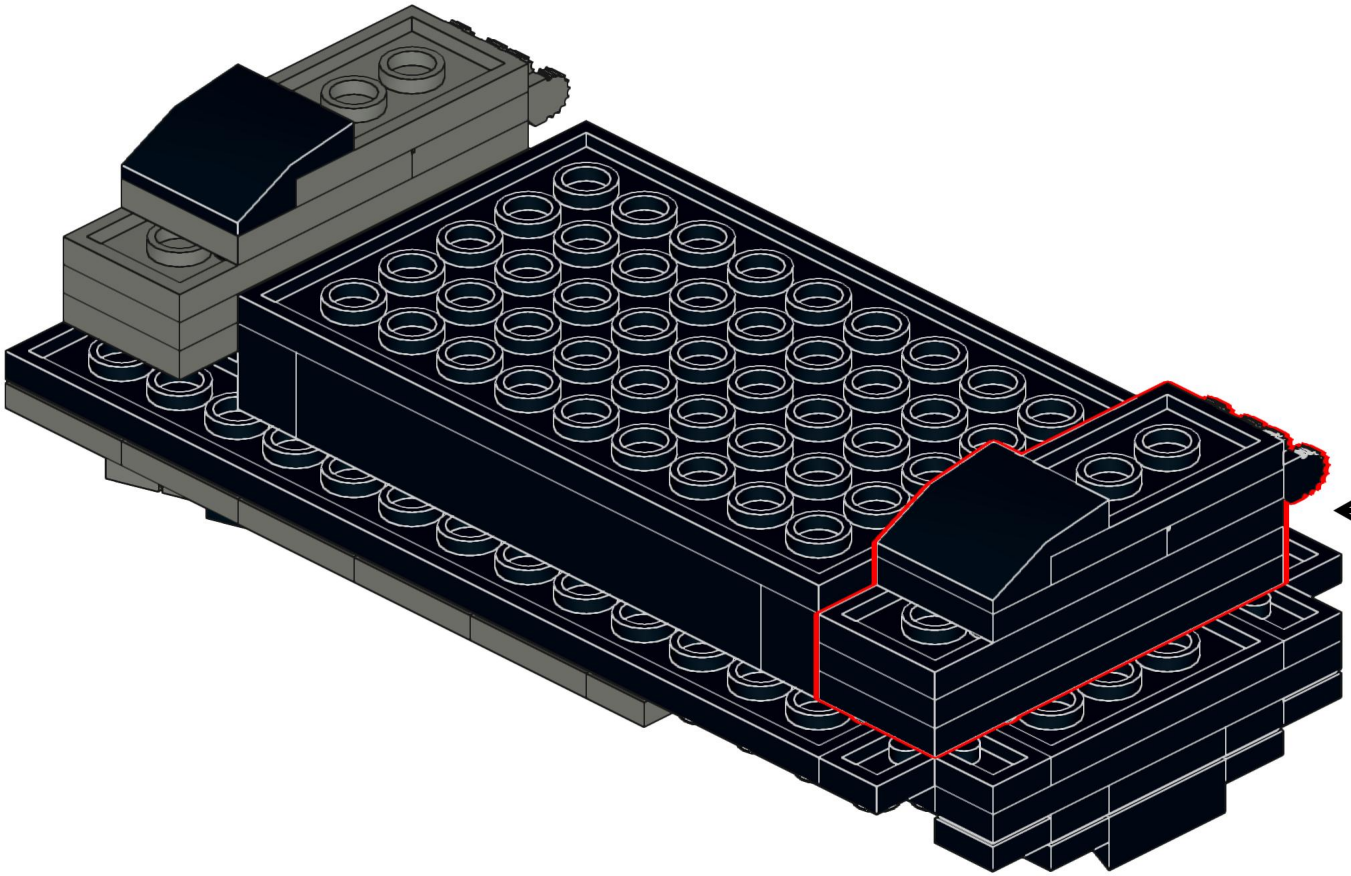

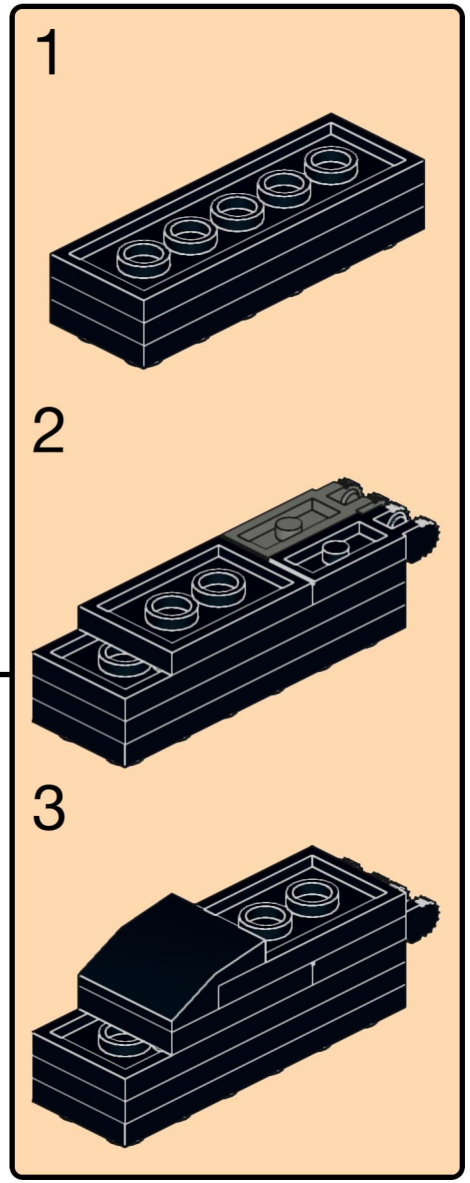

Designed by Michael Gertsch

312

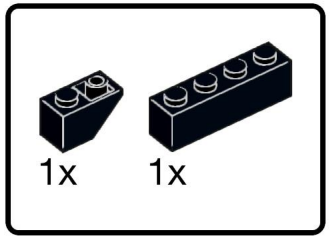

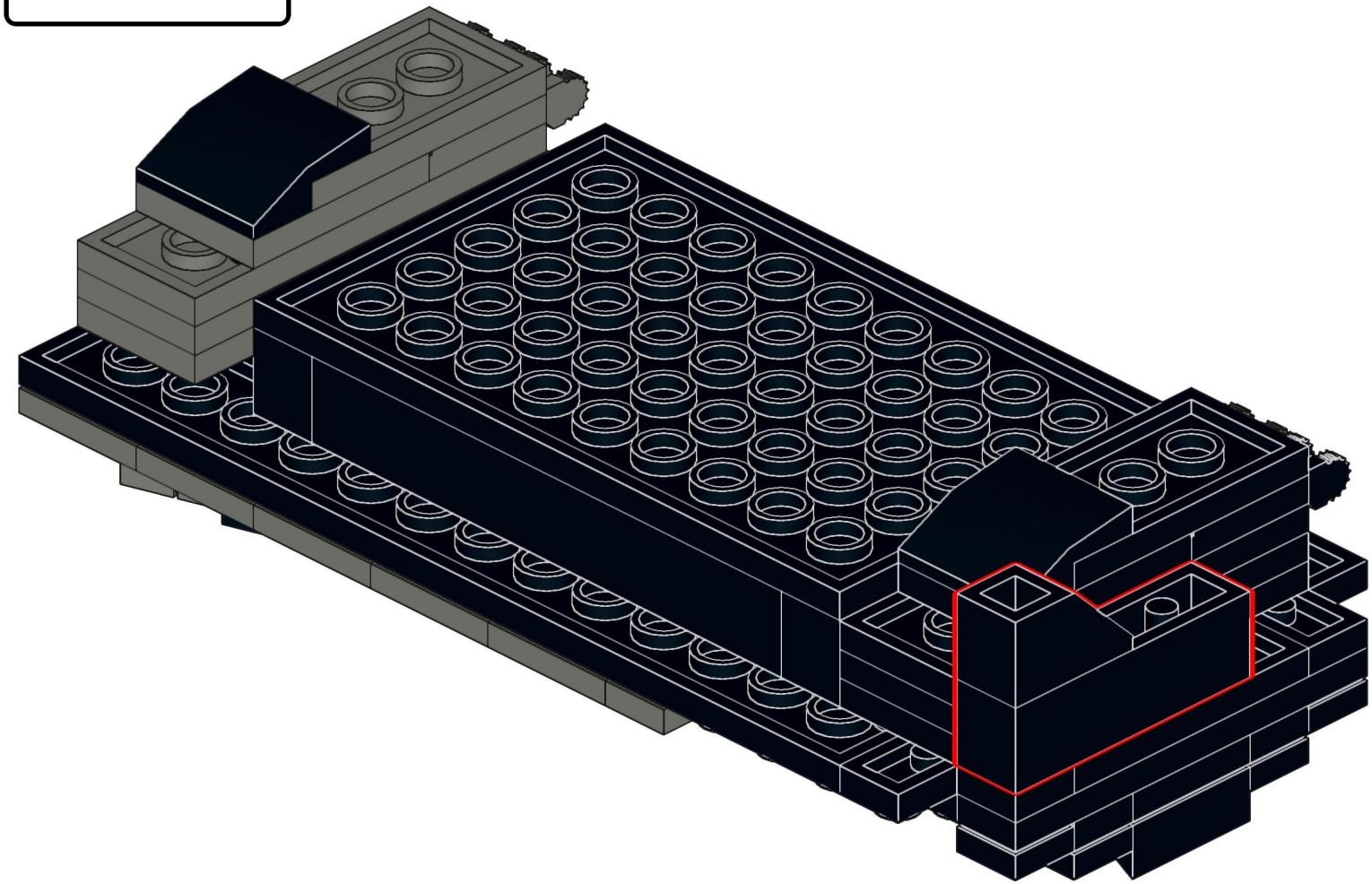

Designed by Michael Gertsch

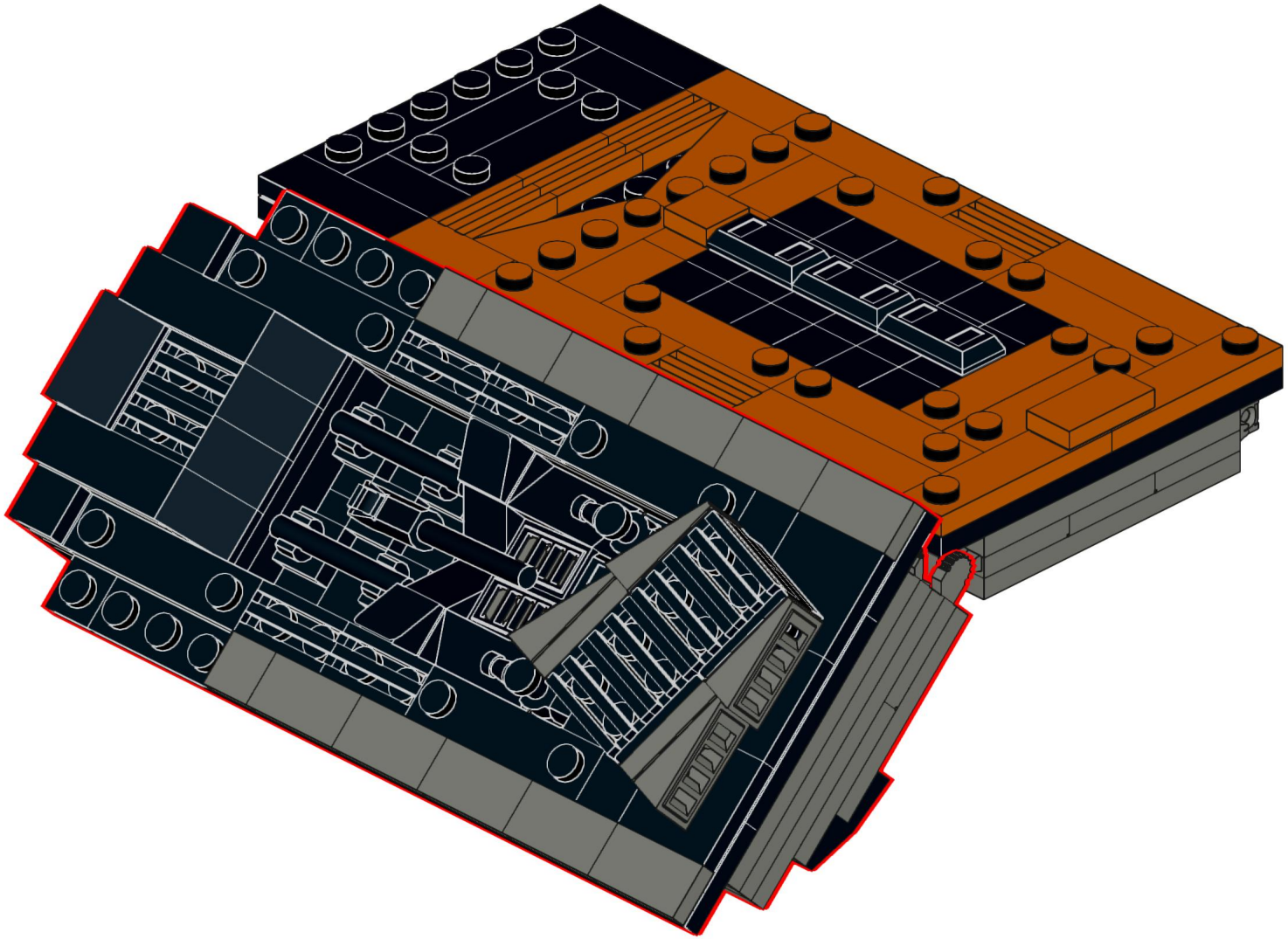

Designed by Michael Gertsch

314

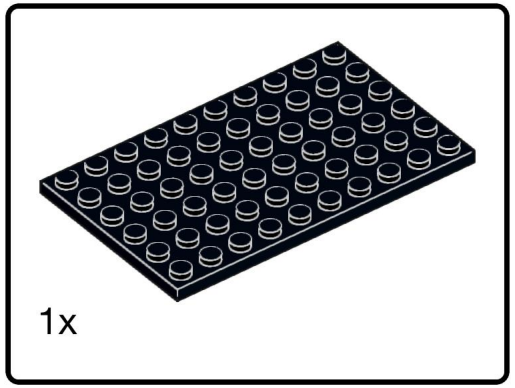

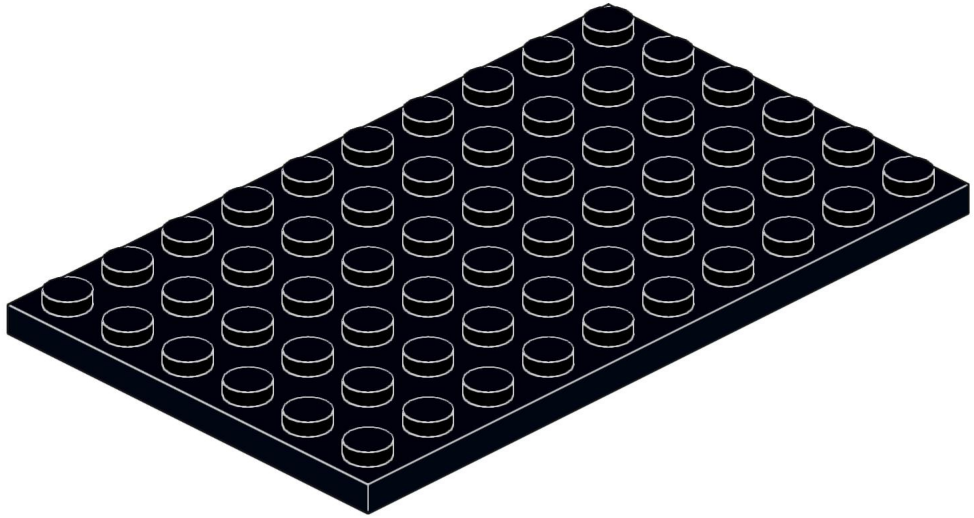

315

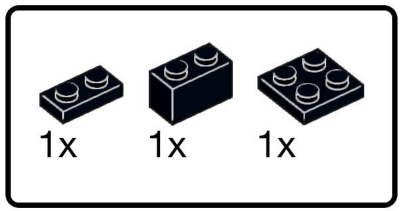

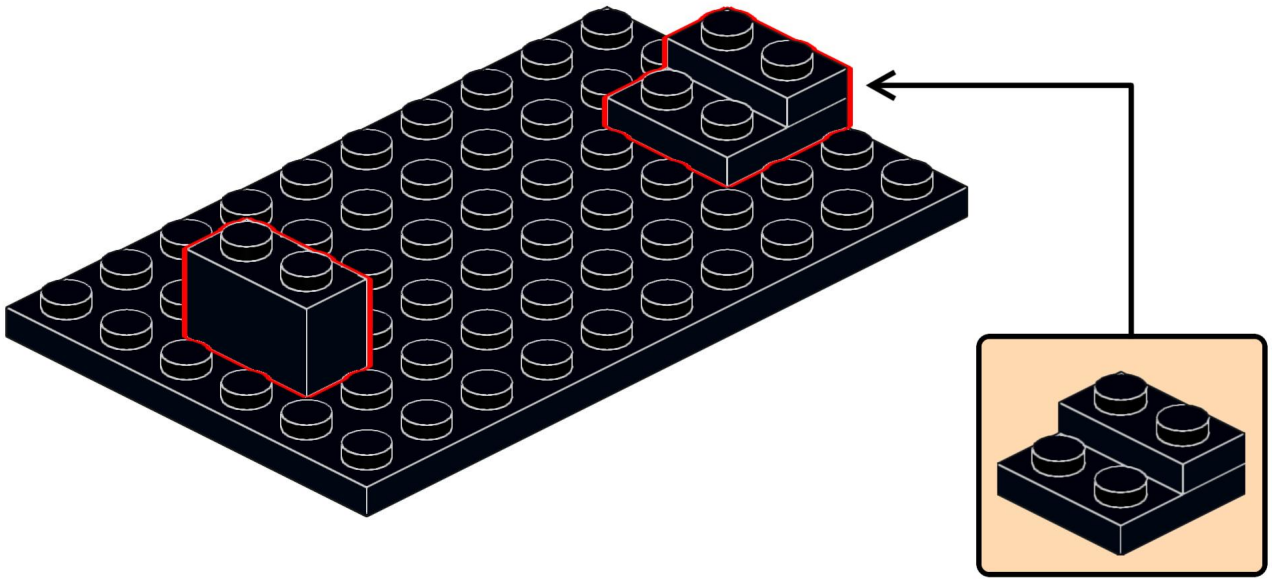

Designed by Michael Gertsch

316

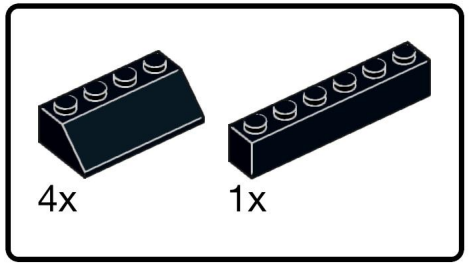

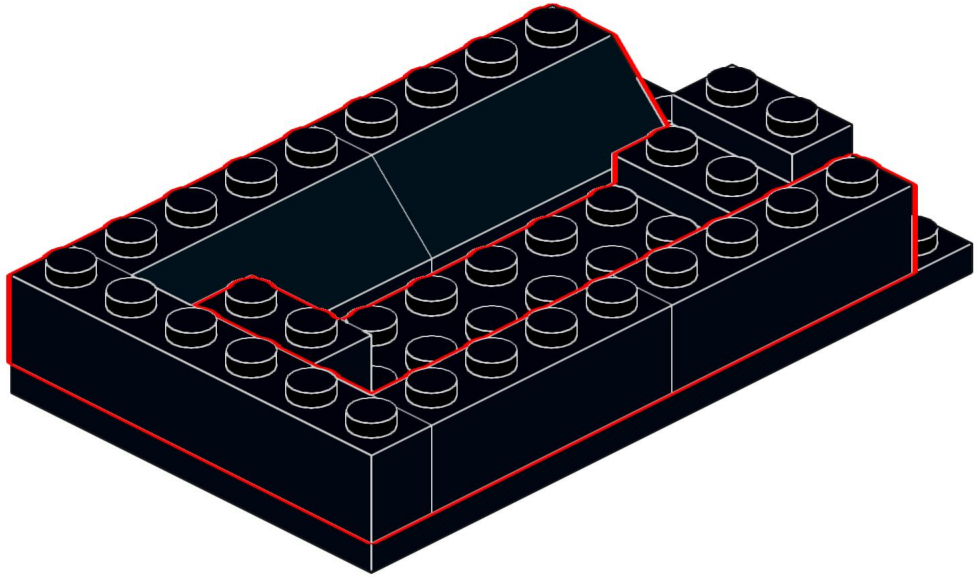

317

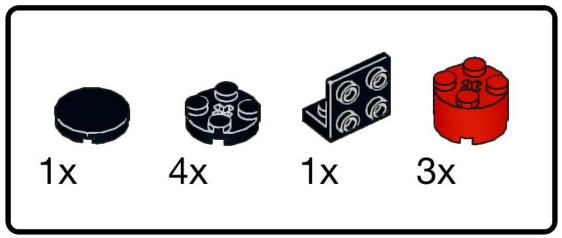

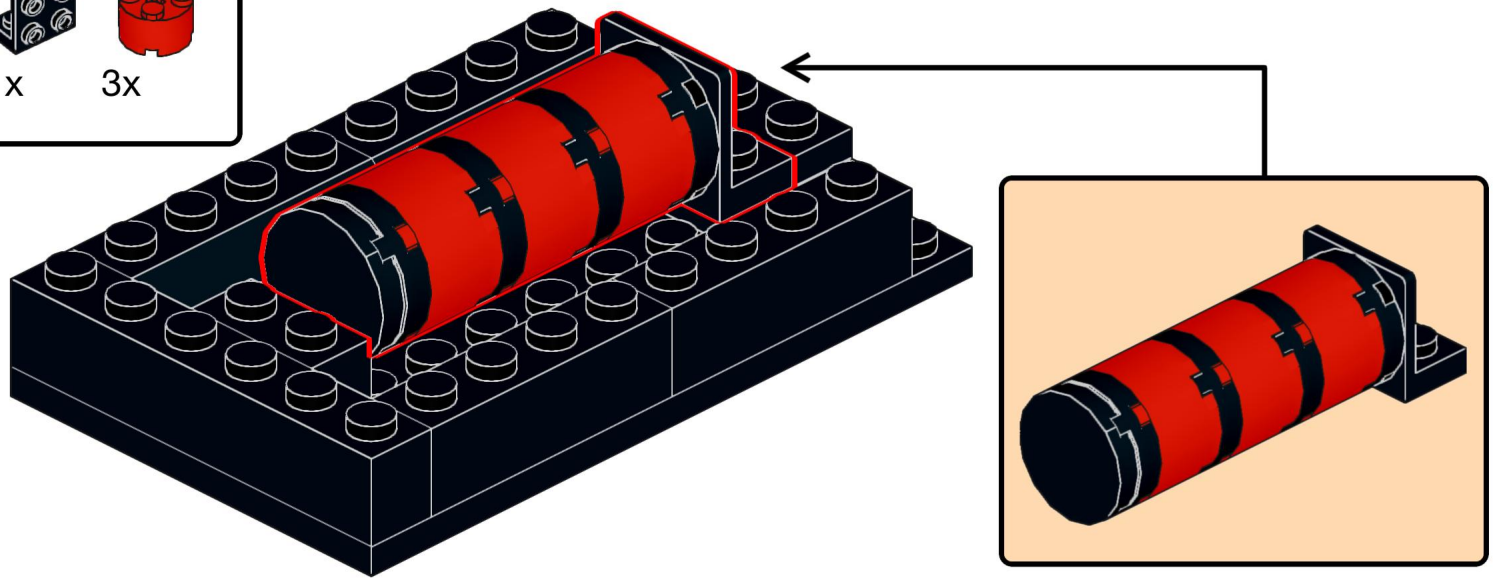

Designed by Michael Gertsch

318

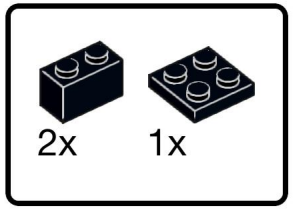

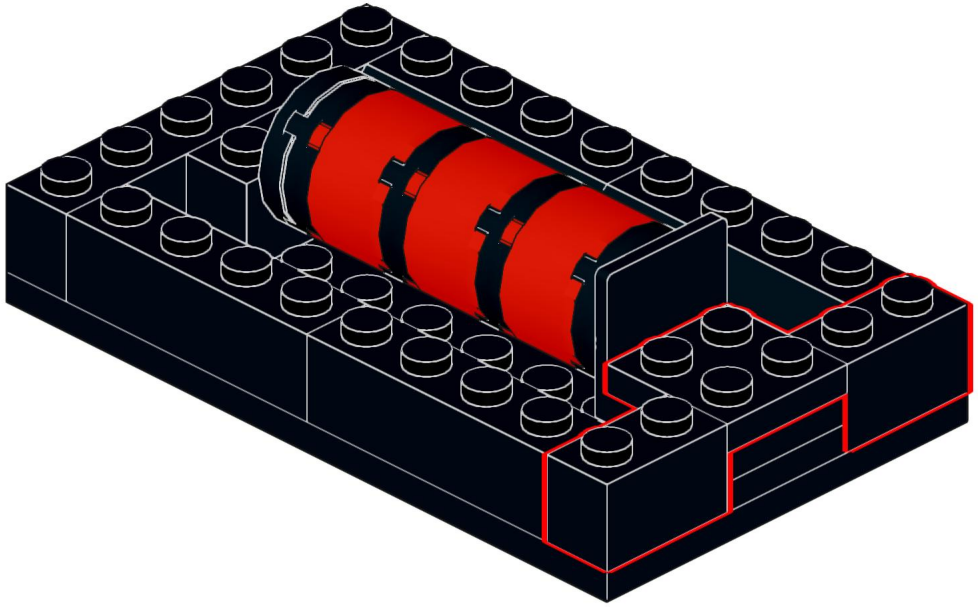

319

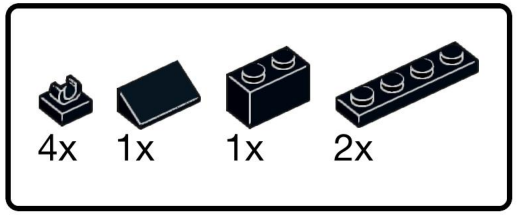

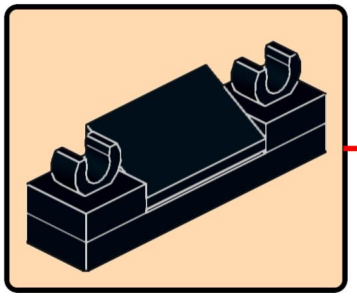

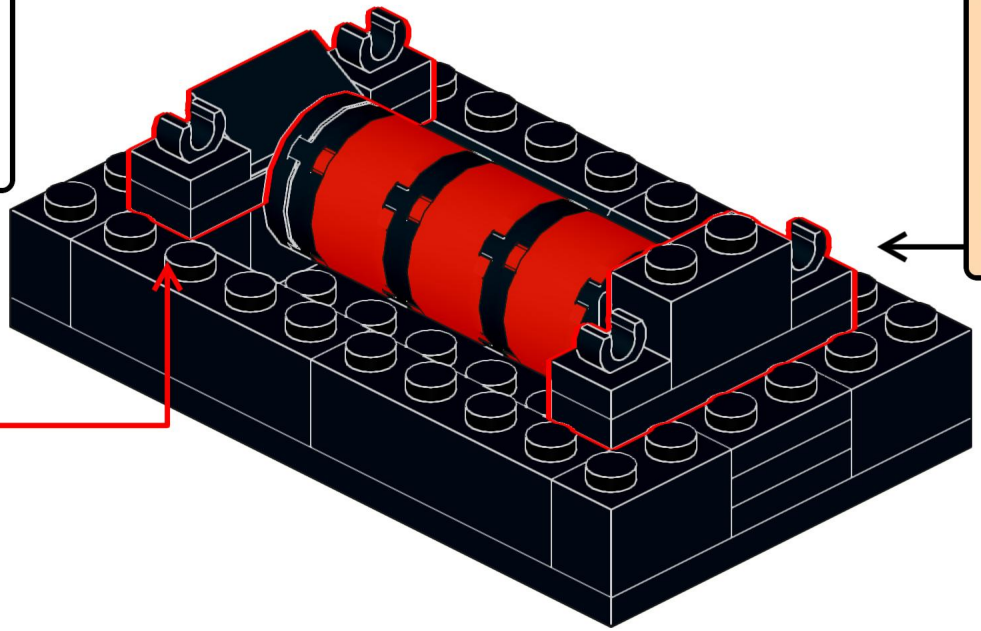

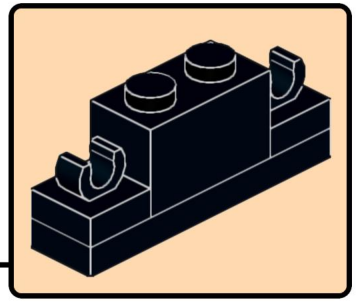

Designed by Michael Gertsch

320

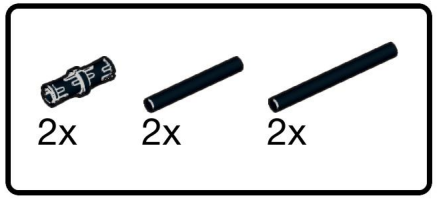

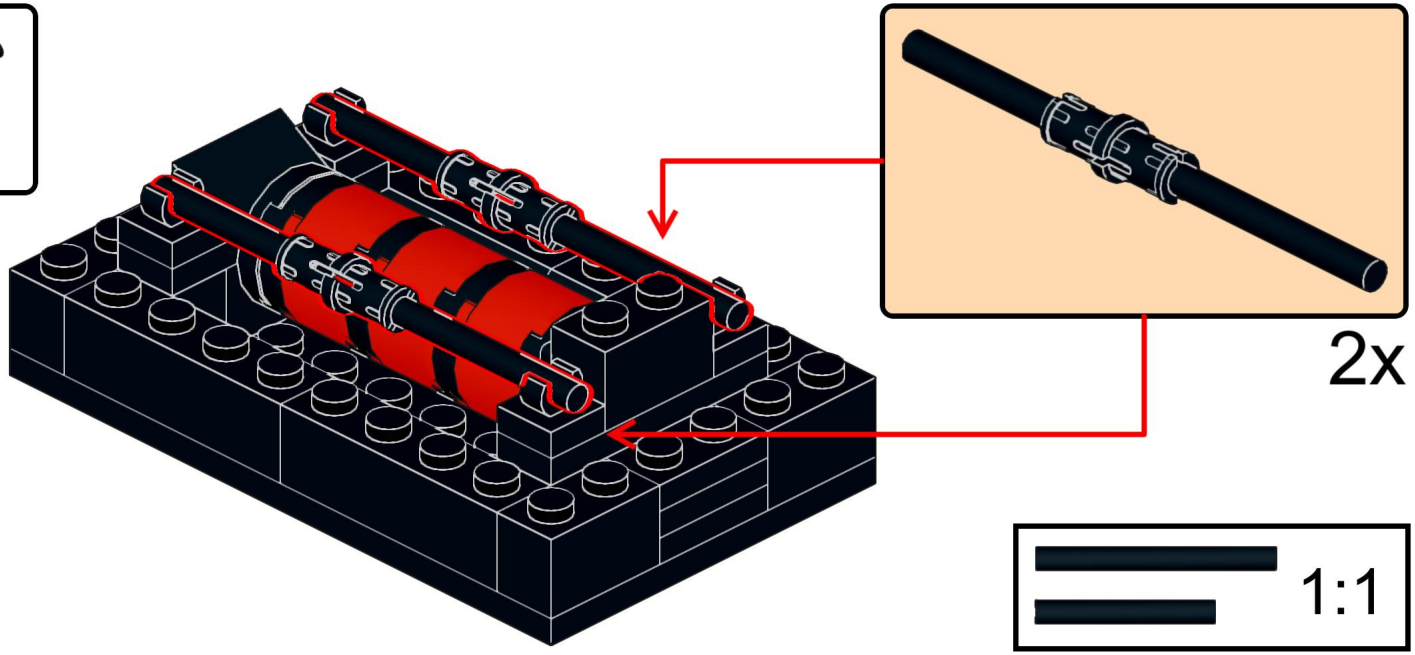

321

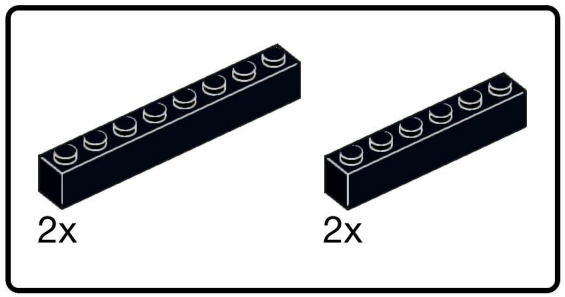

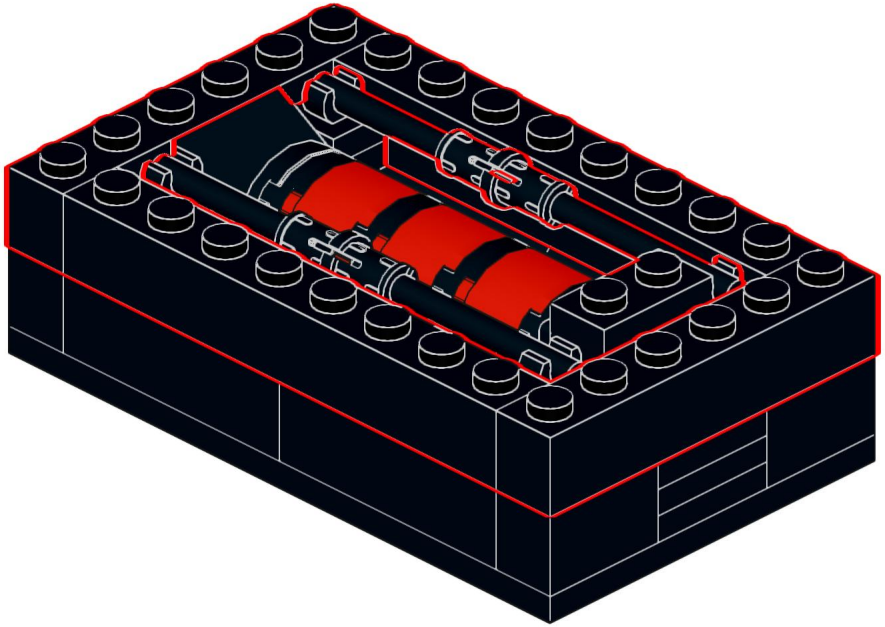

Designed by Michael Gertsch

322

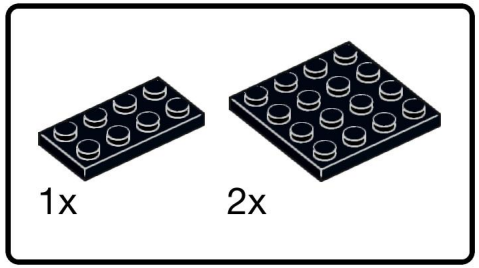

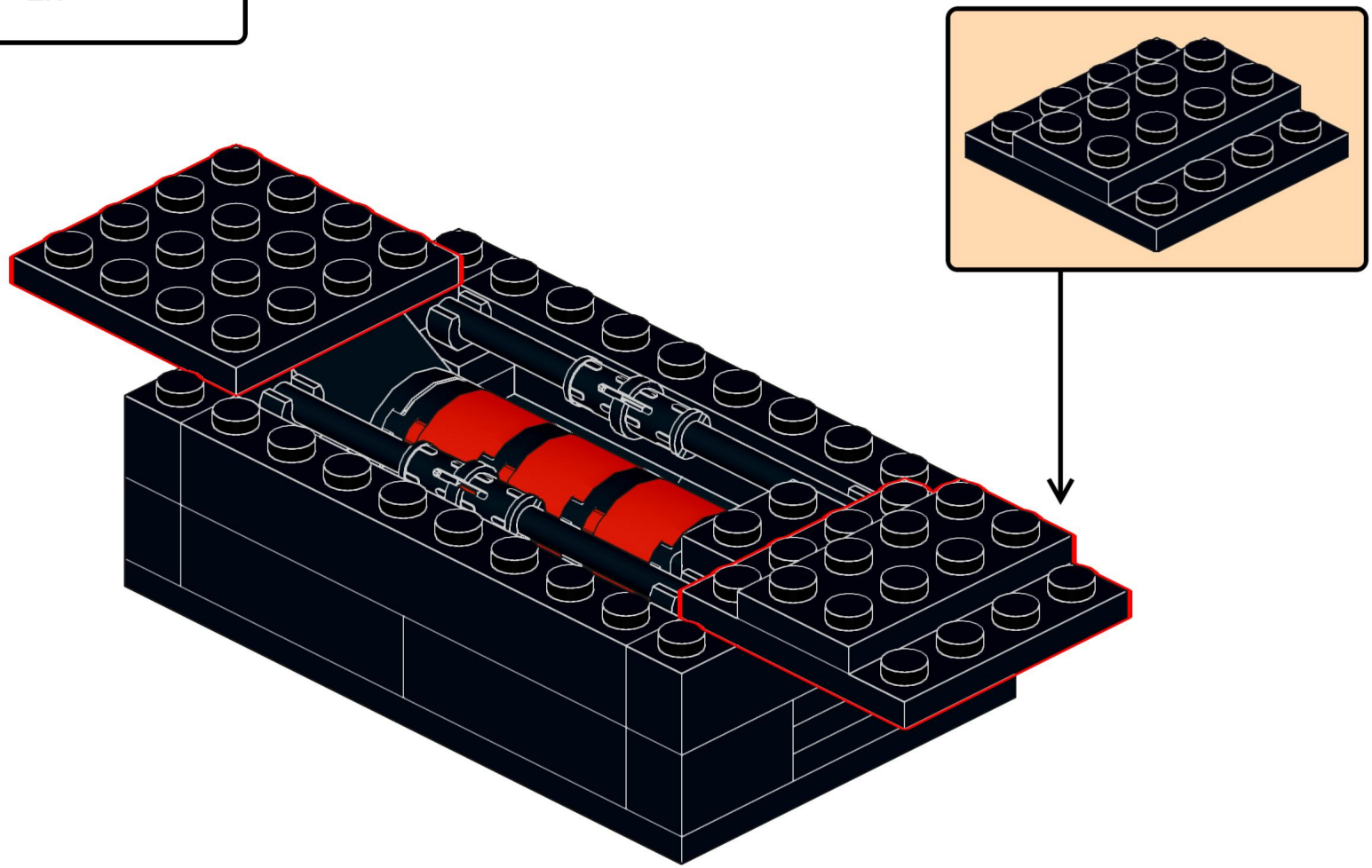

Designed by Michael Gertsch

323

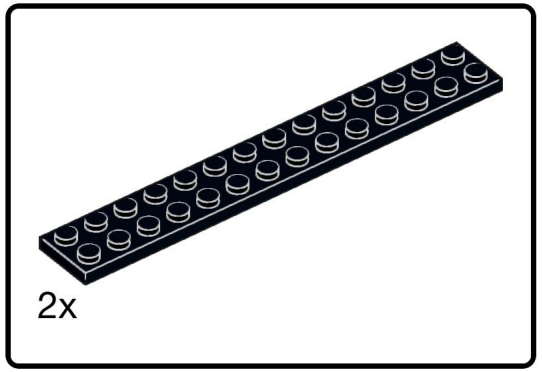

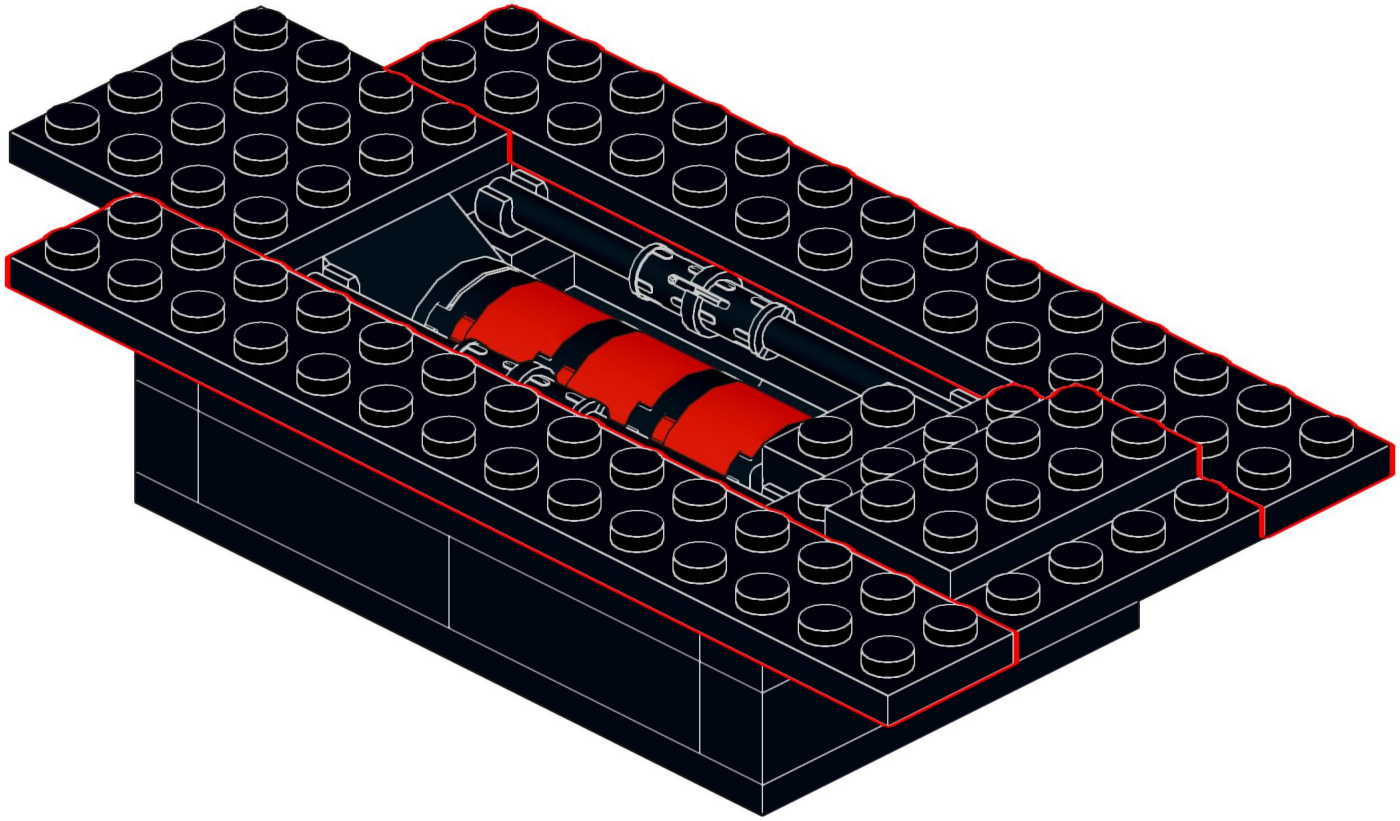

Designed by Michael Gertsch

324

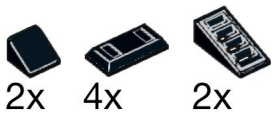

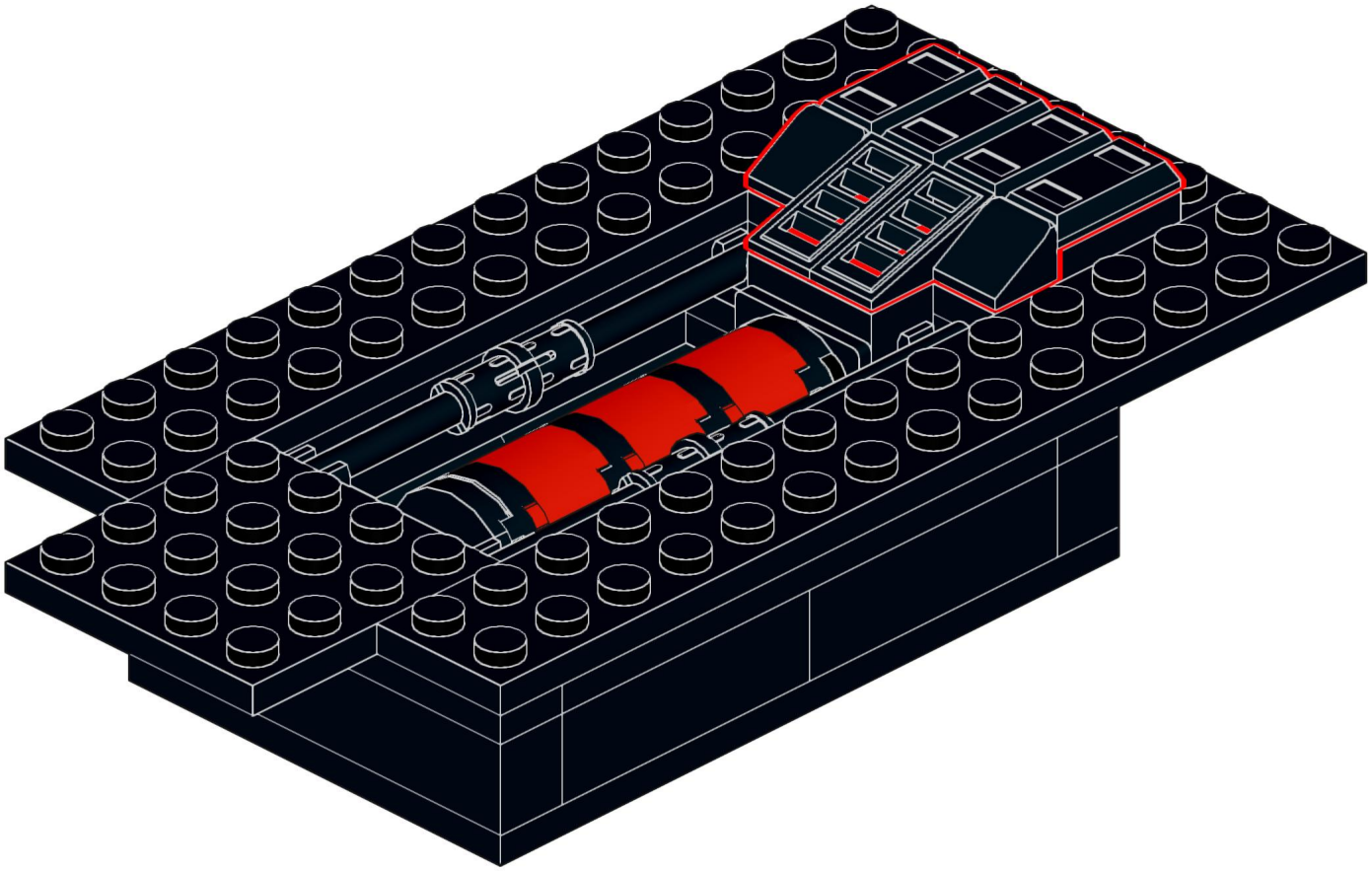

Designed by Michael Gertsch

325

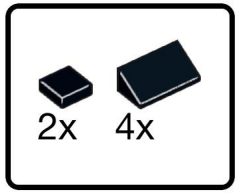

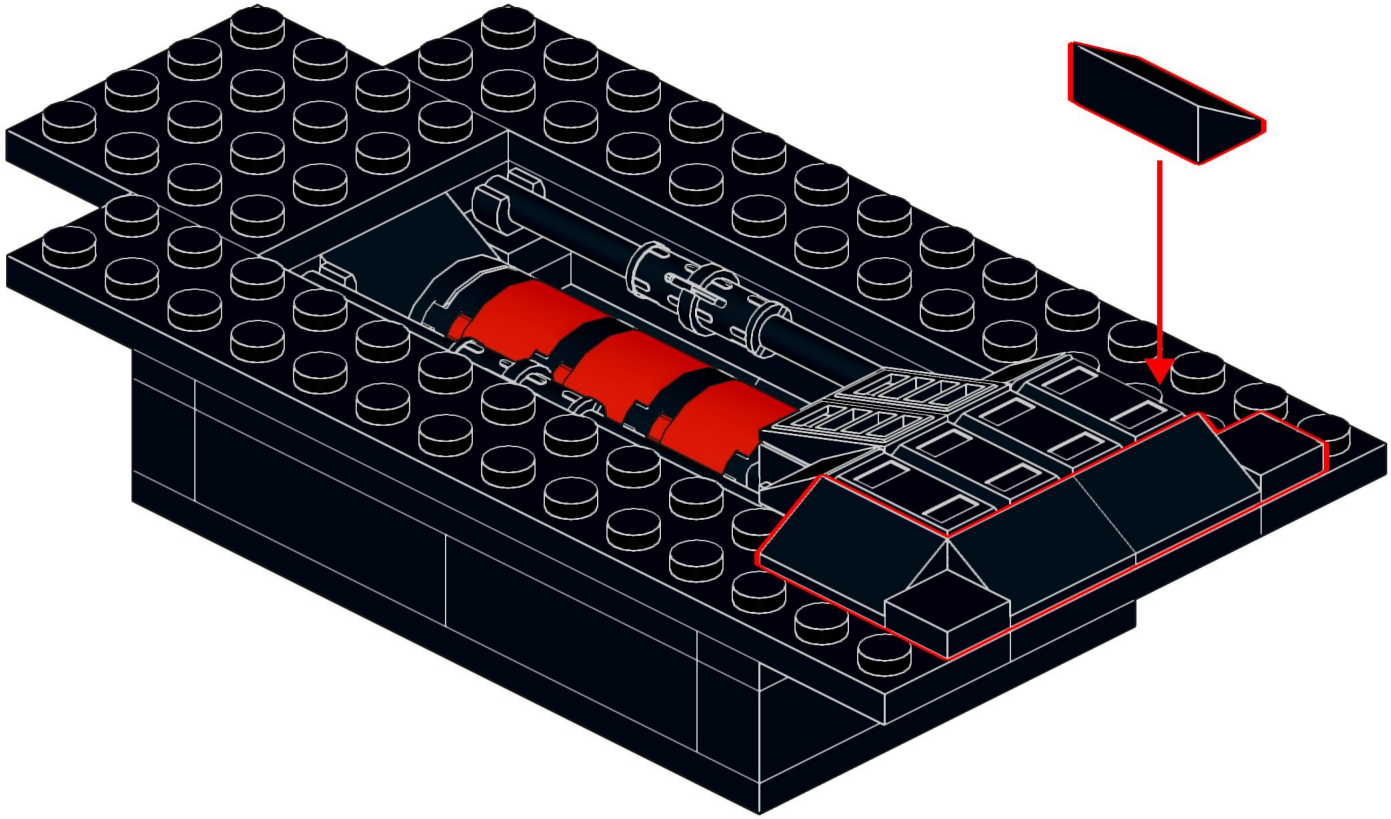

Designed by Michael Gertsch

326

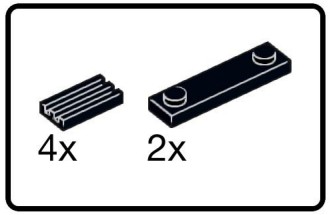

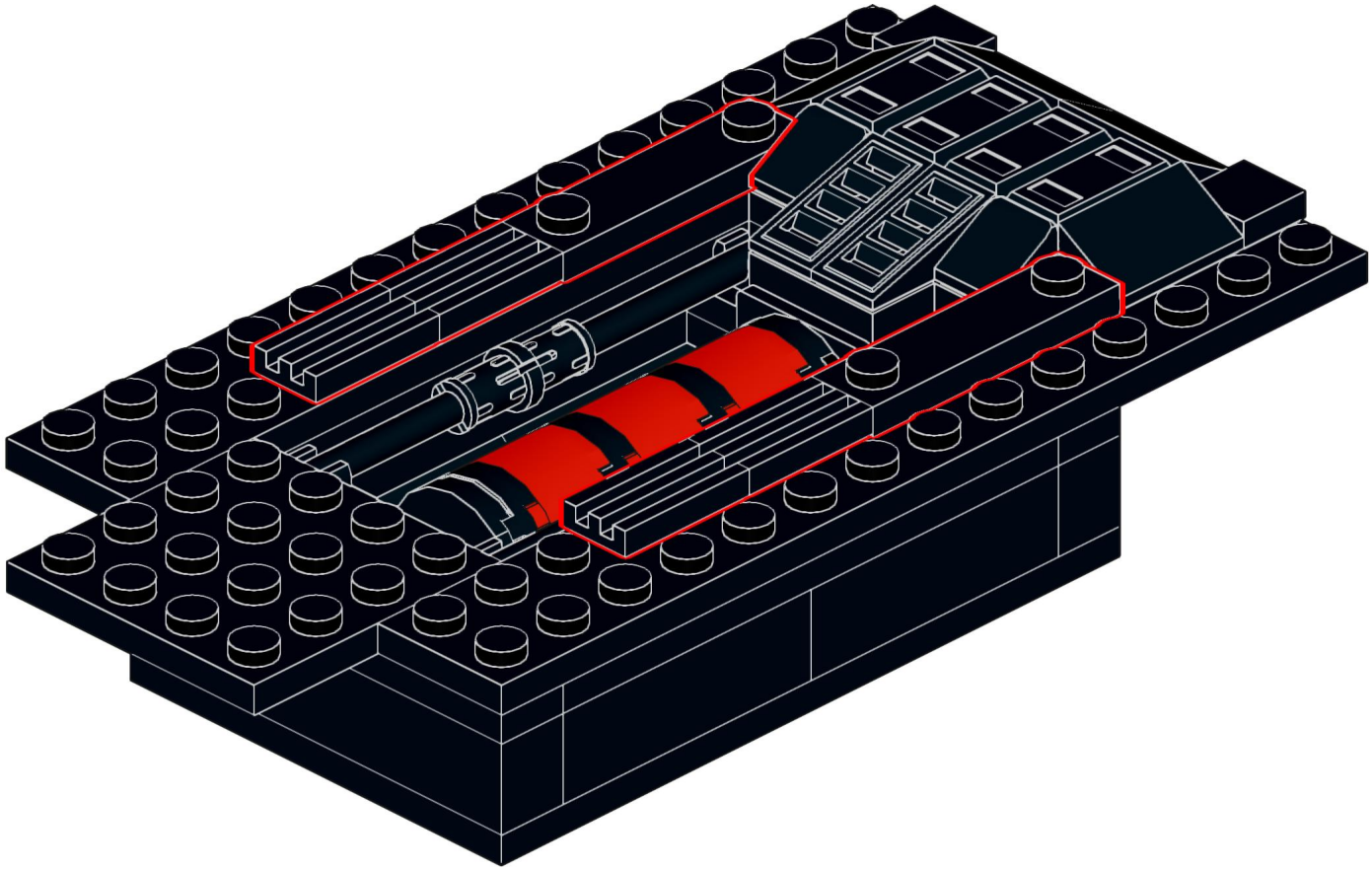

Designed by Michael Gertsch

327

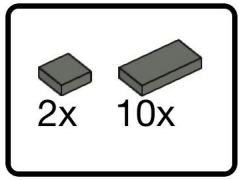

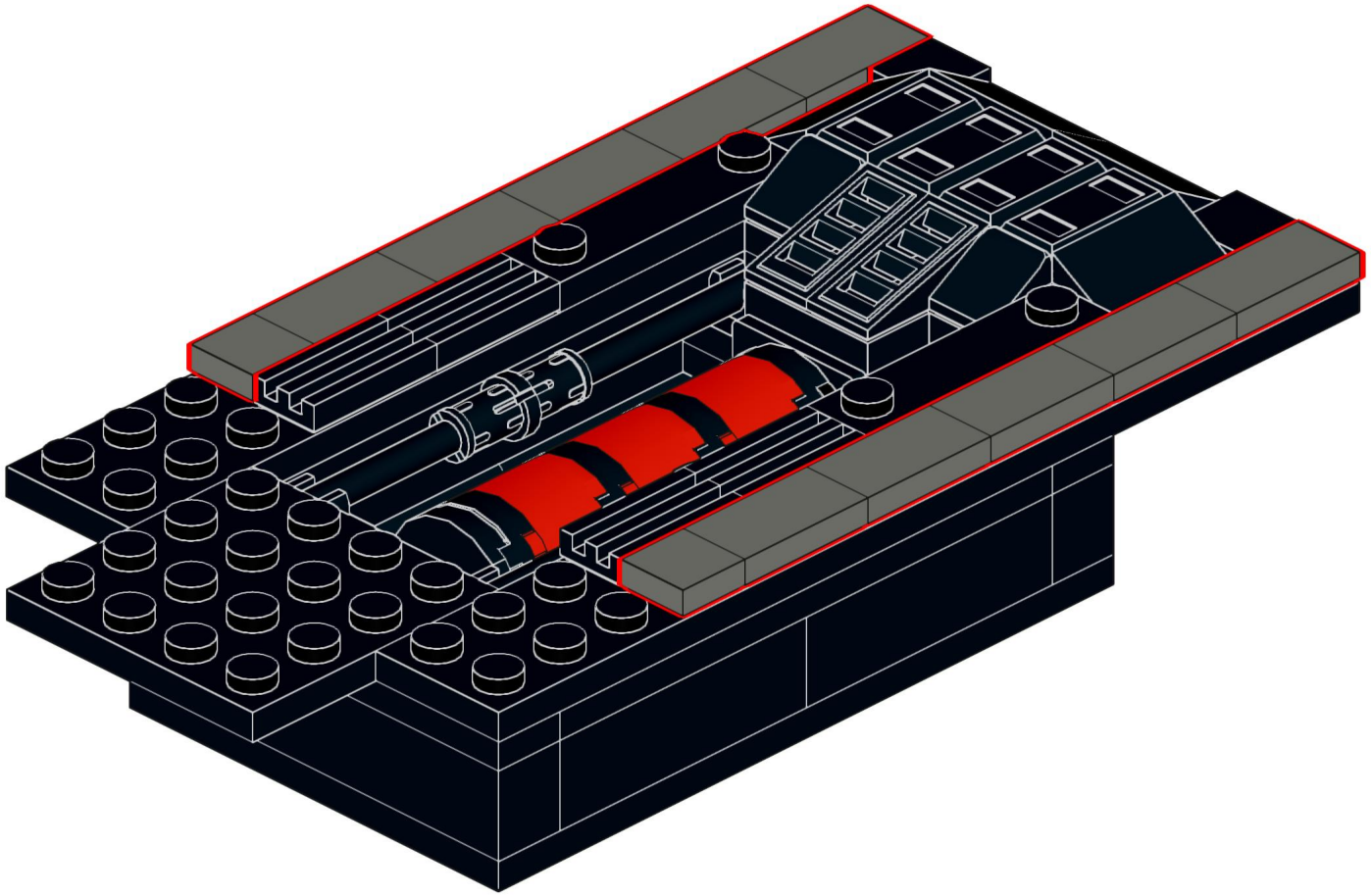

Designed by Michael Gertsch

328

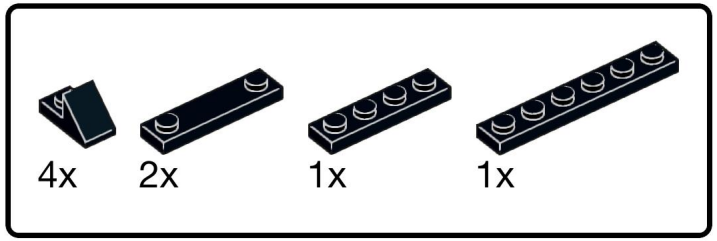

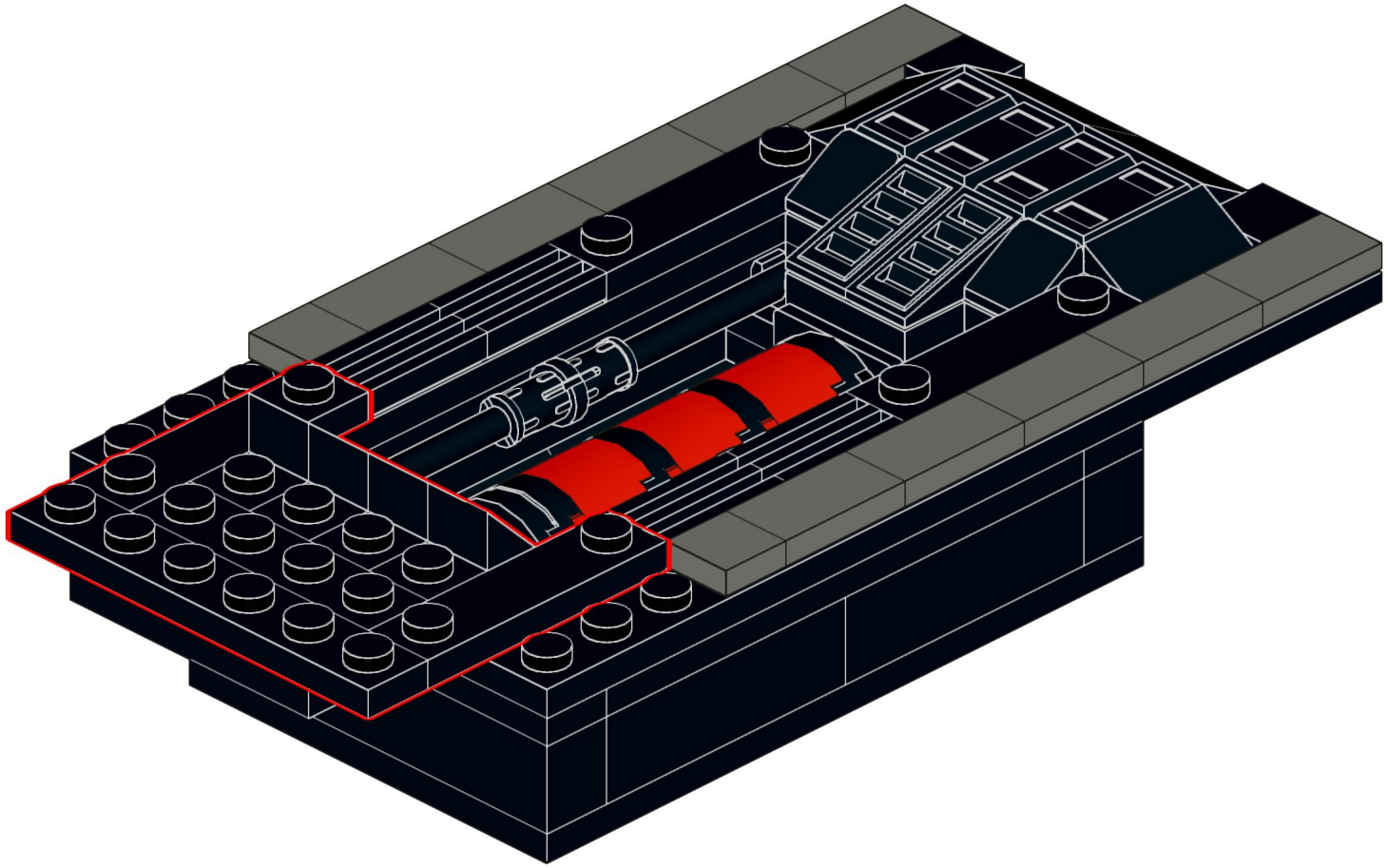

Designed by Michael Gertsch

329

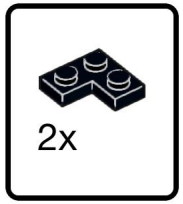

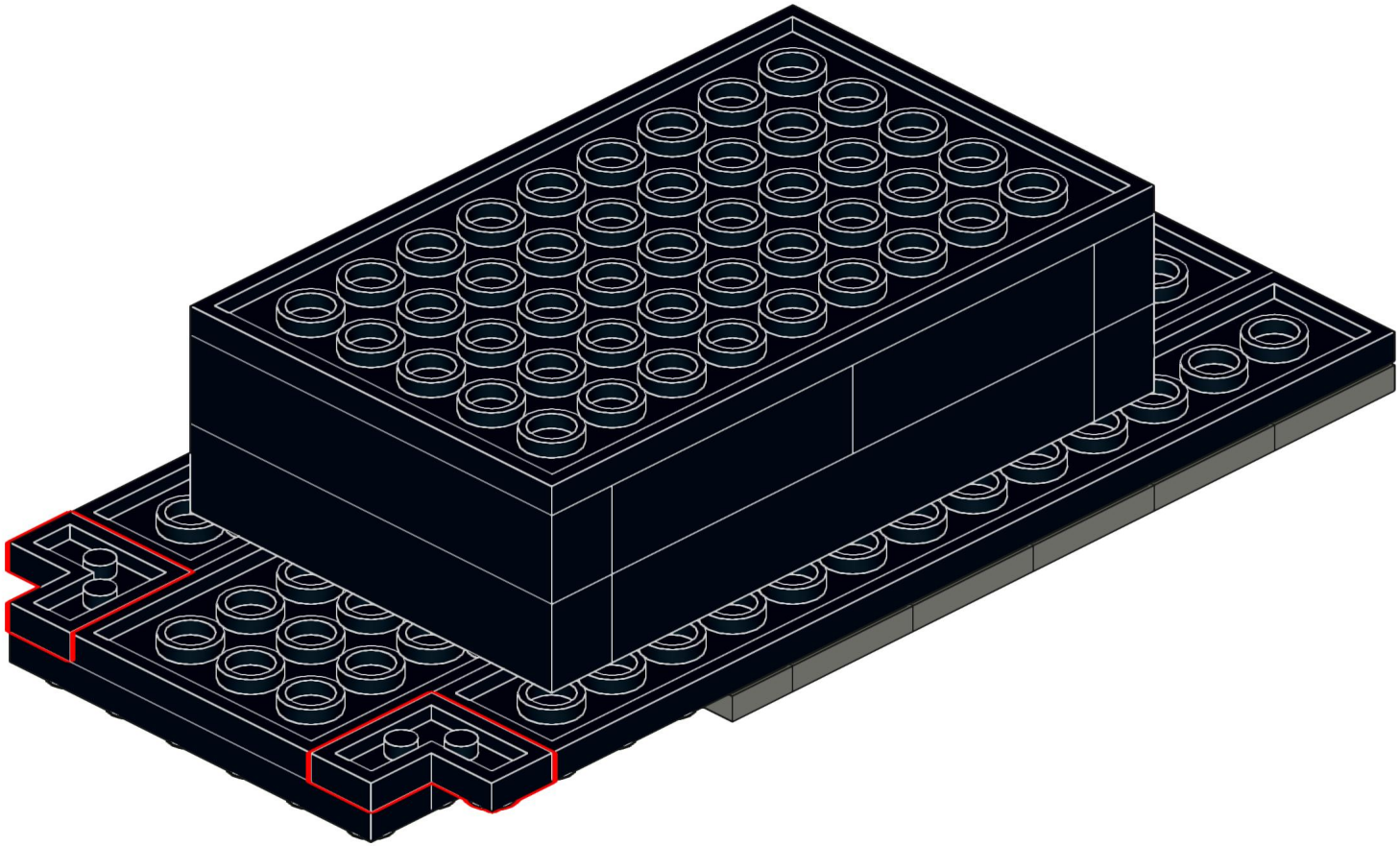

Designed by Michael Gertsch

330

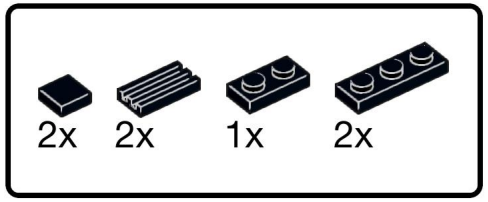

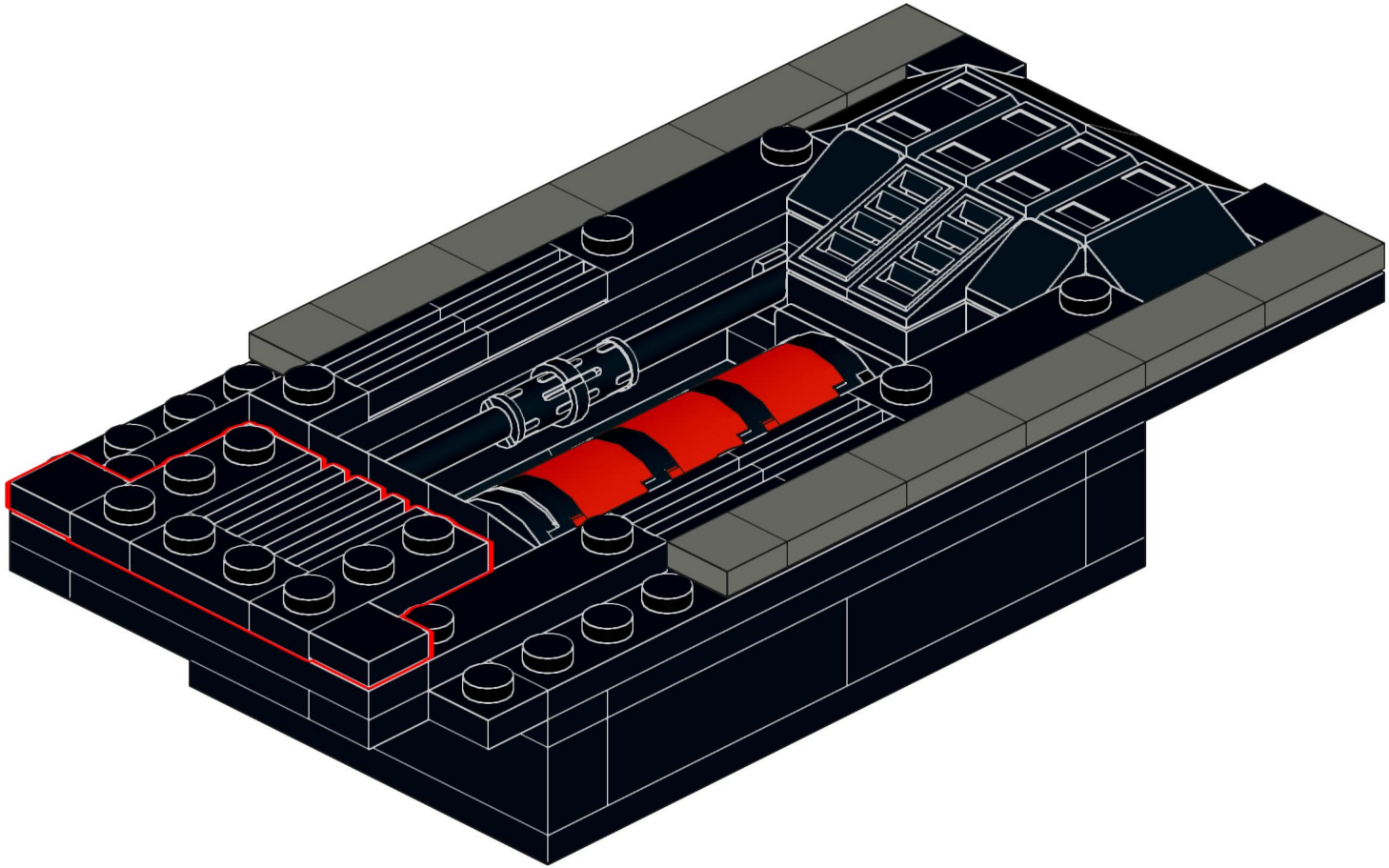

Designed by Michael Gertsch

331

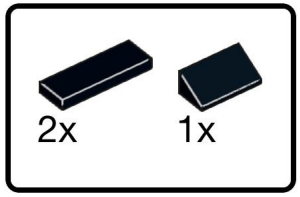

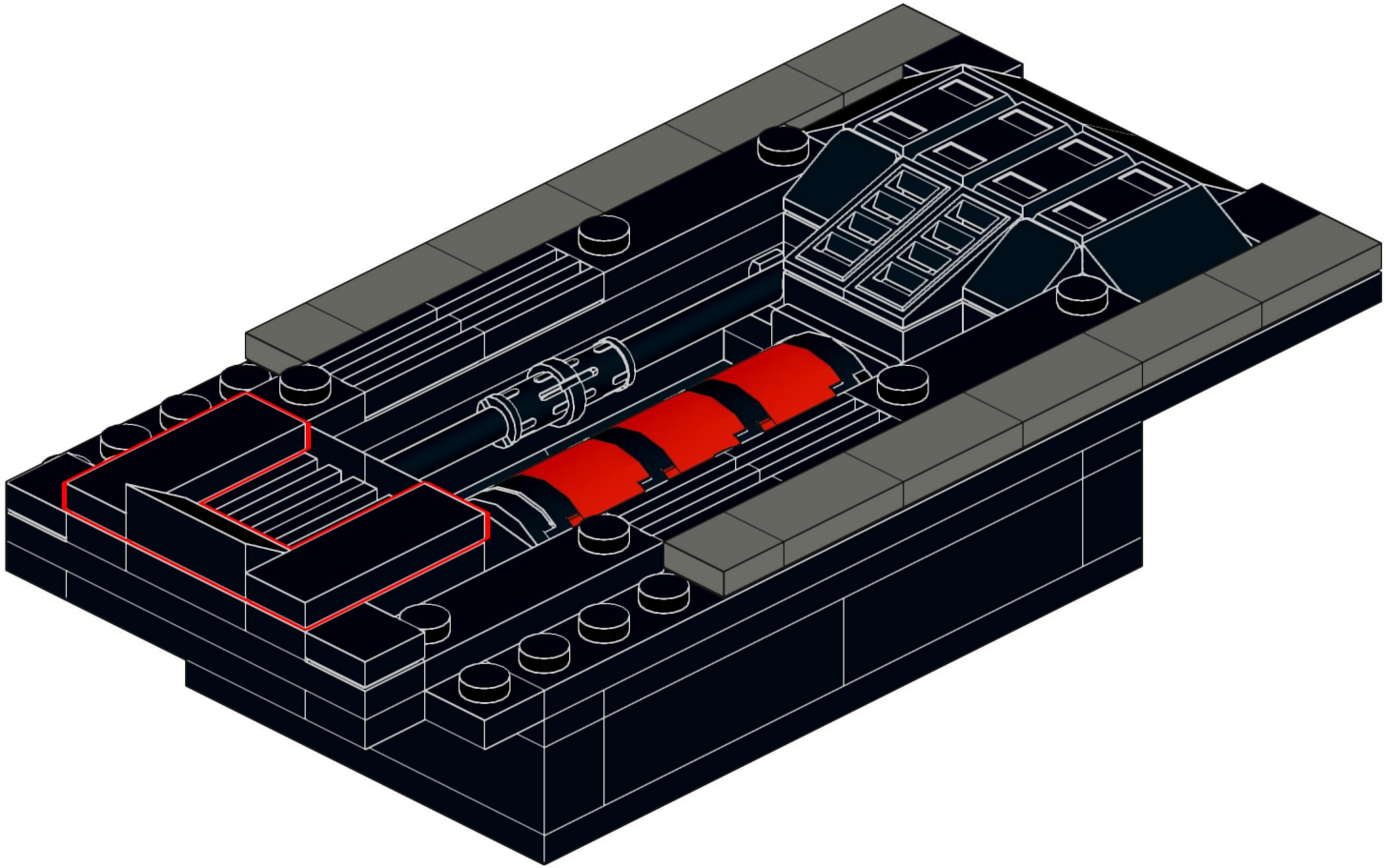

Designed by Michael Gertsch

332

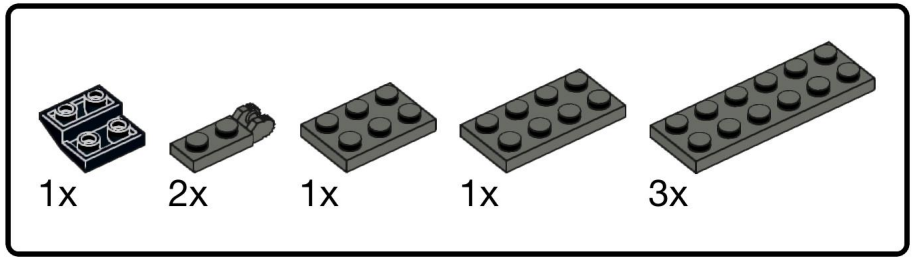

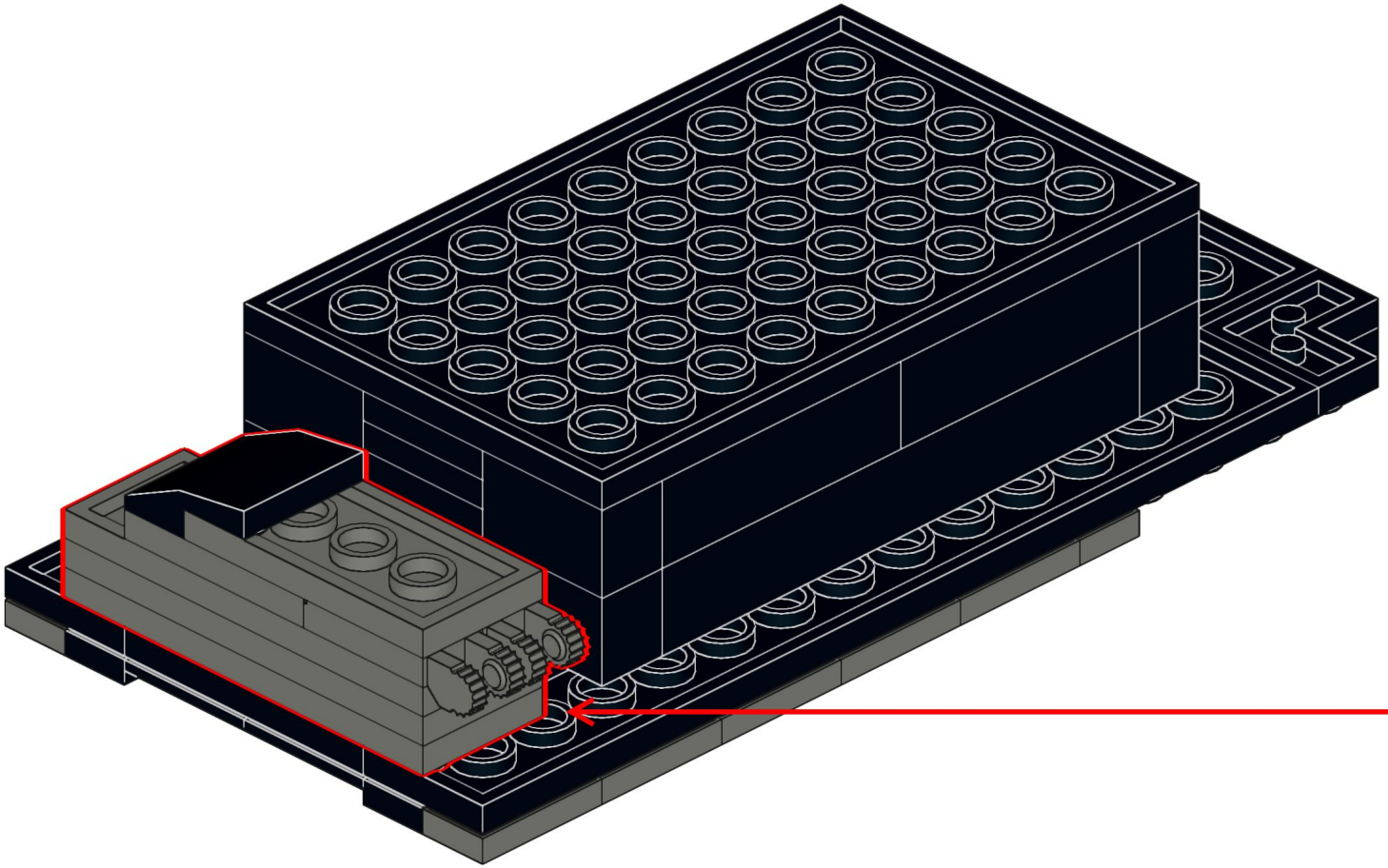

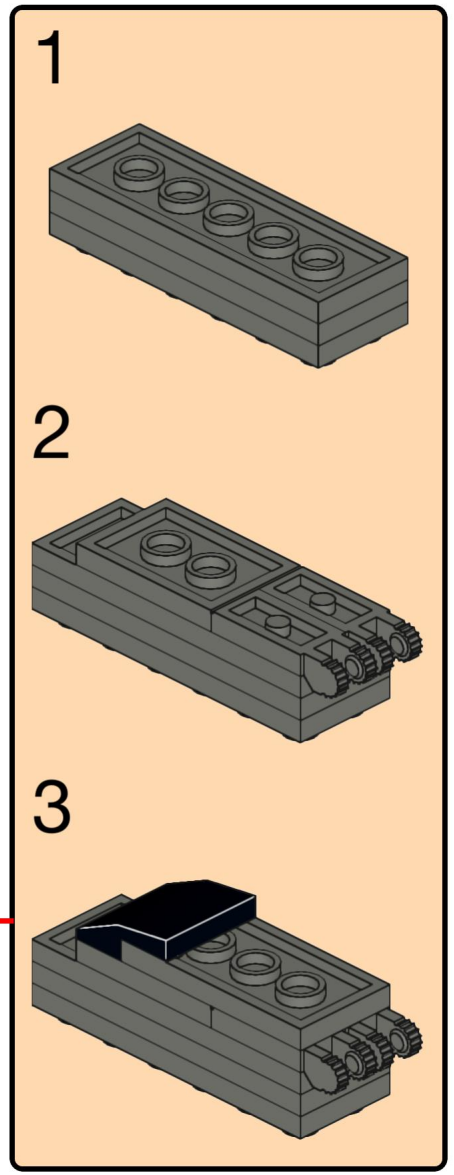

Designed by Michael Gertsch

333

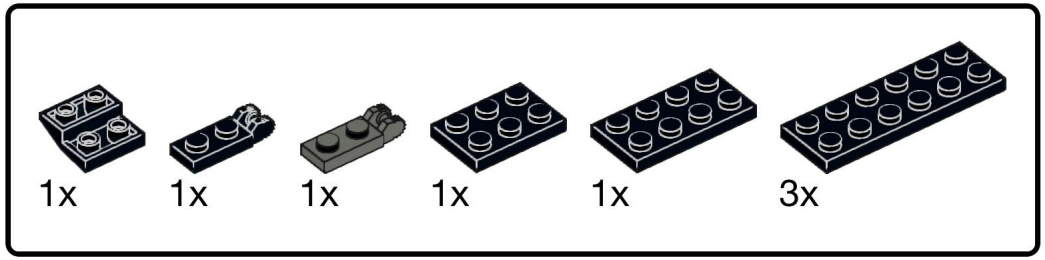

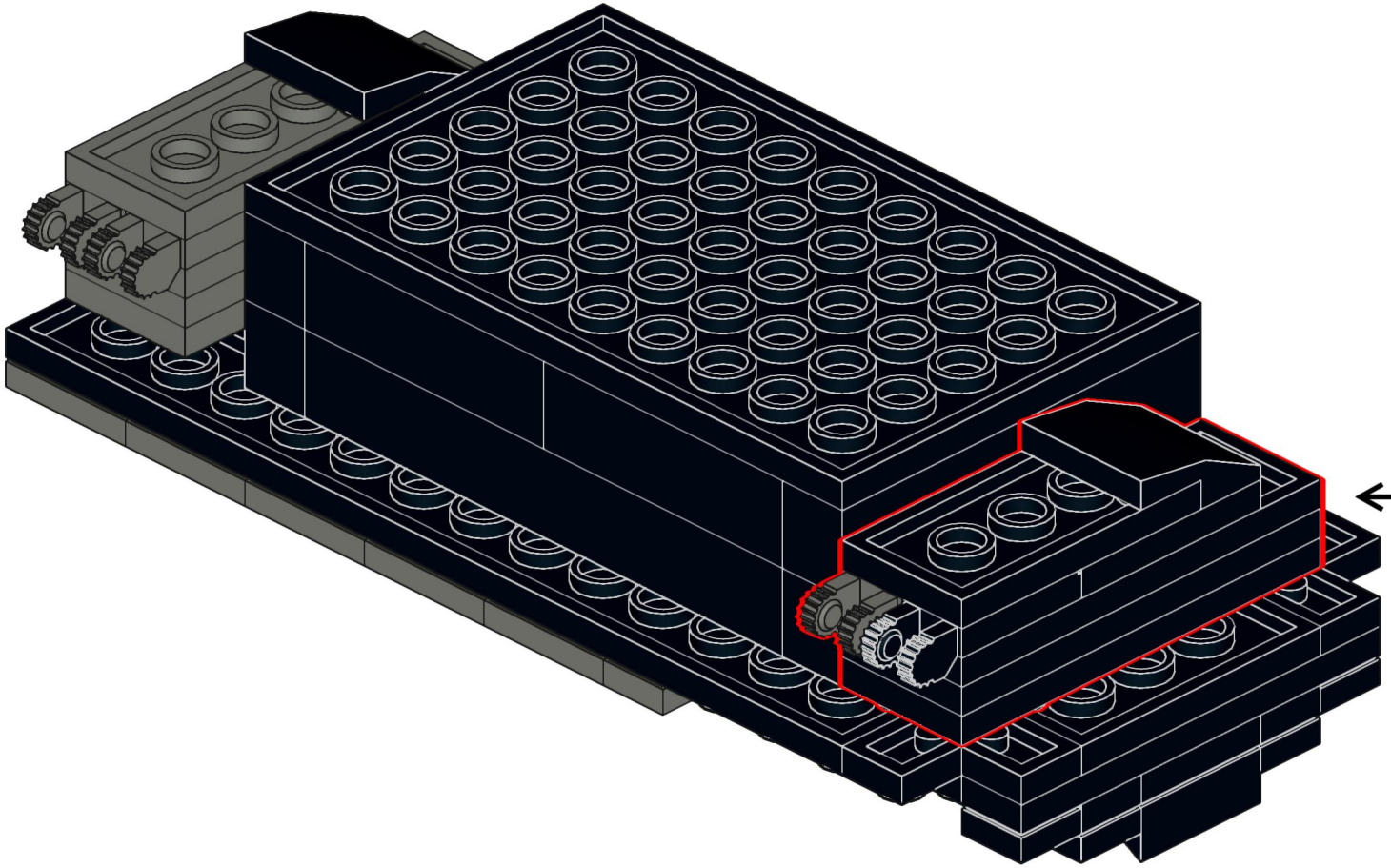

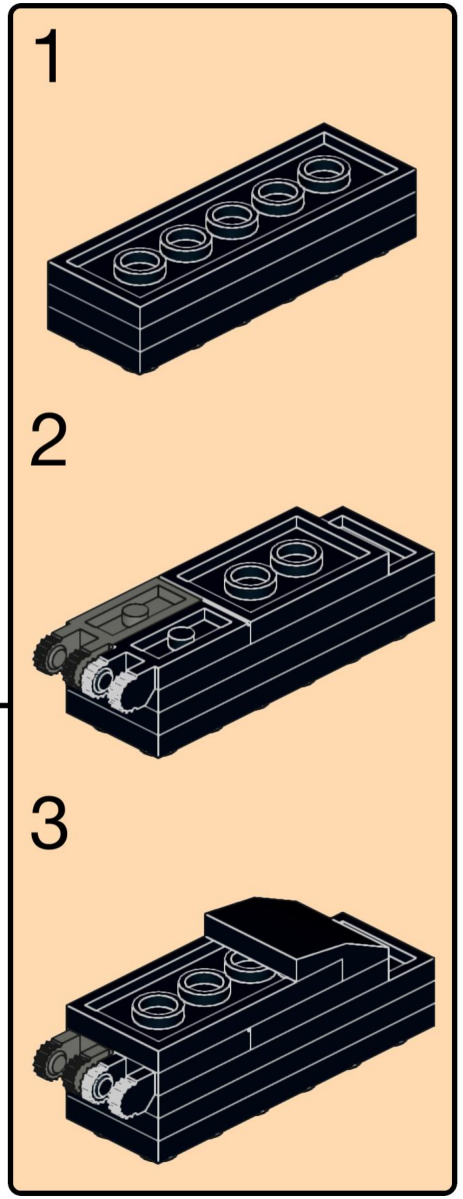

Designed by Michael Gertsch

334

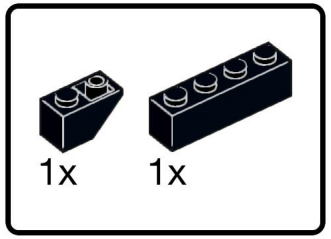

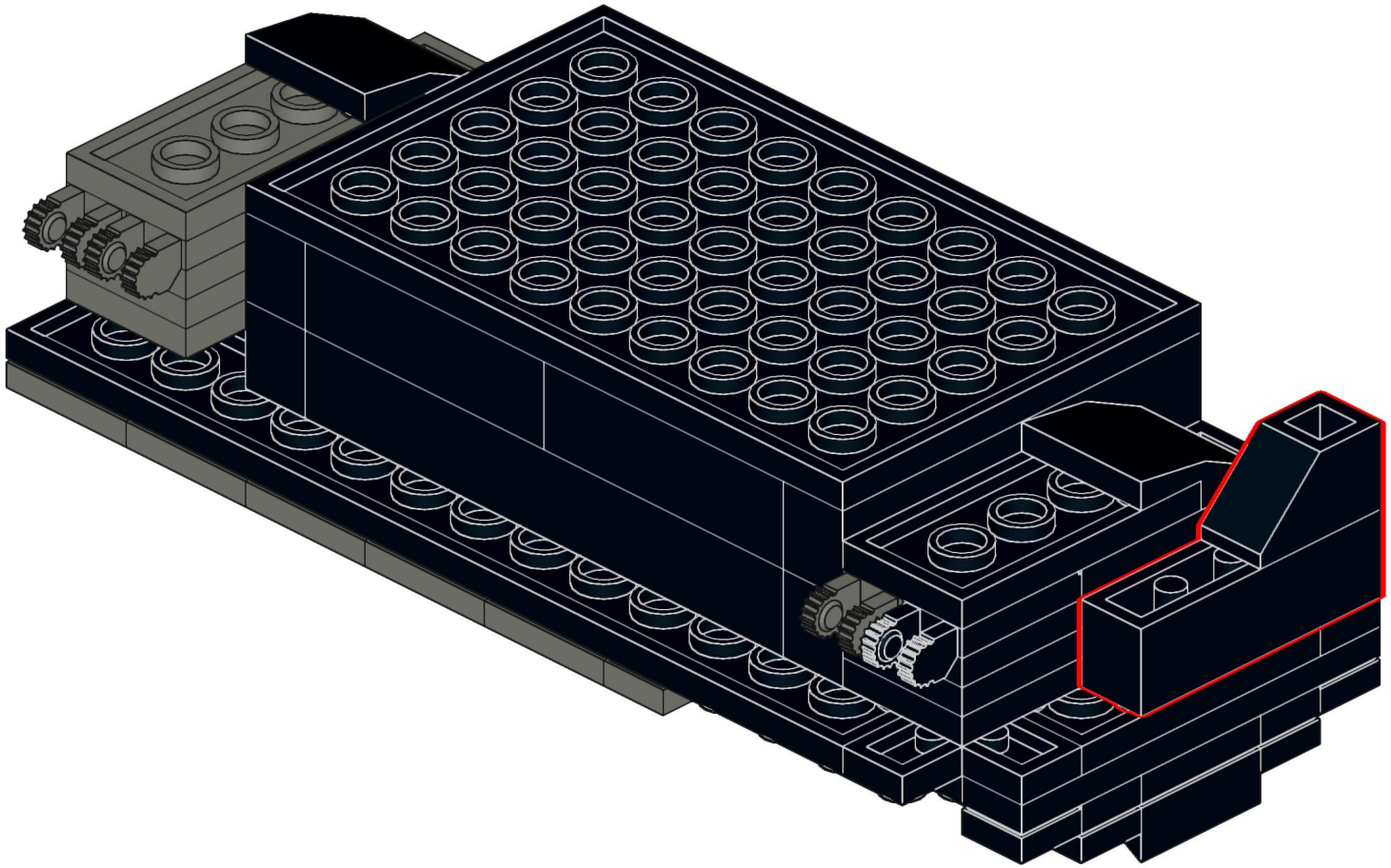

Designed by Michael Gertsch

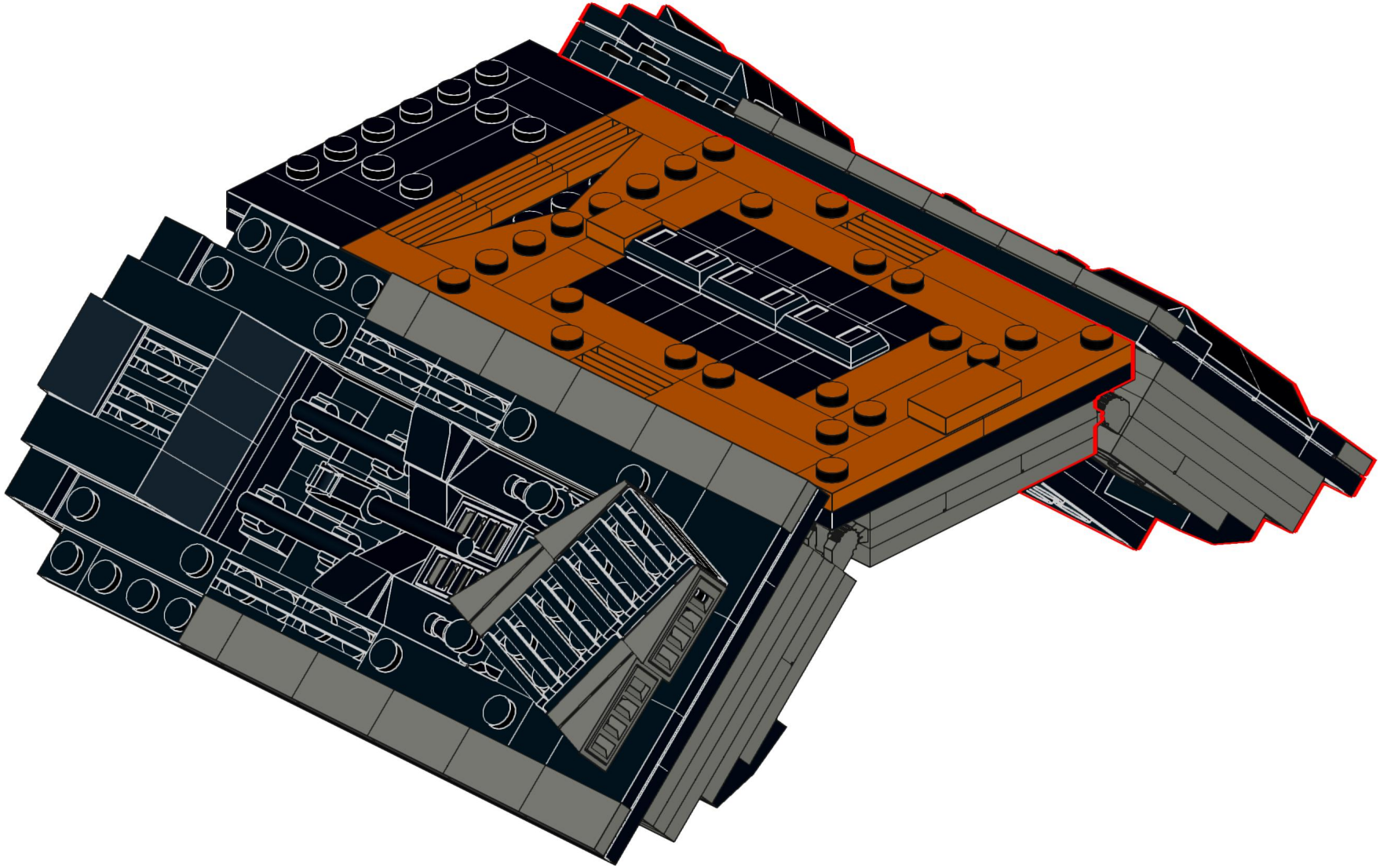

Designed by Michael Gertsch

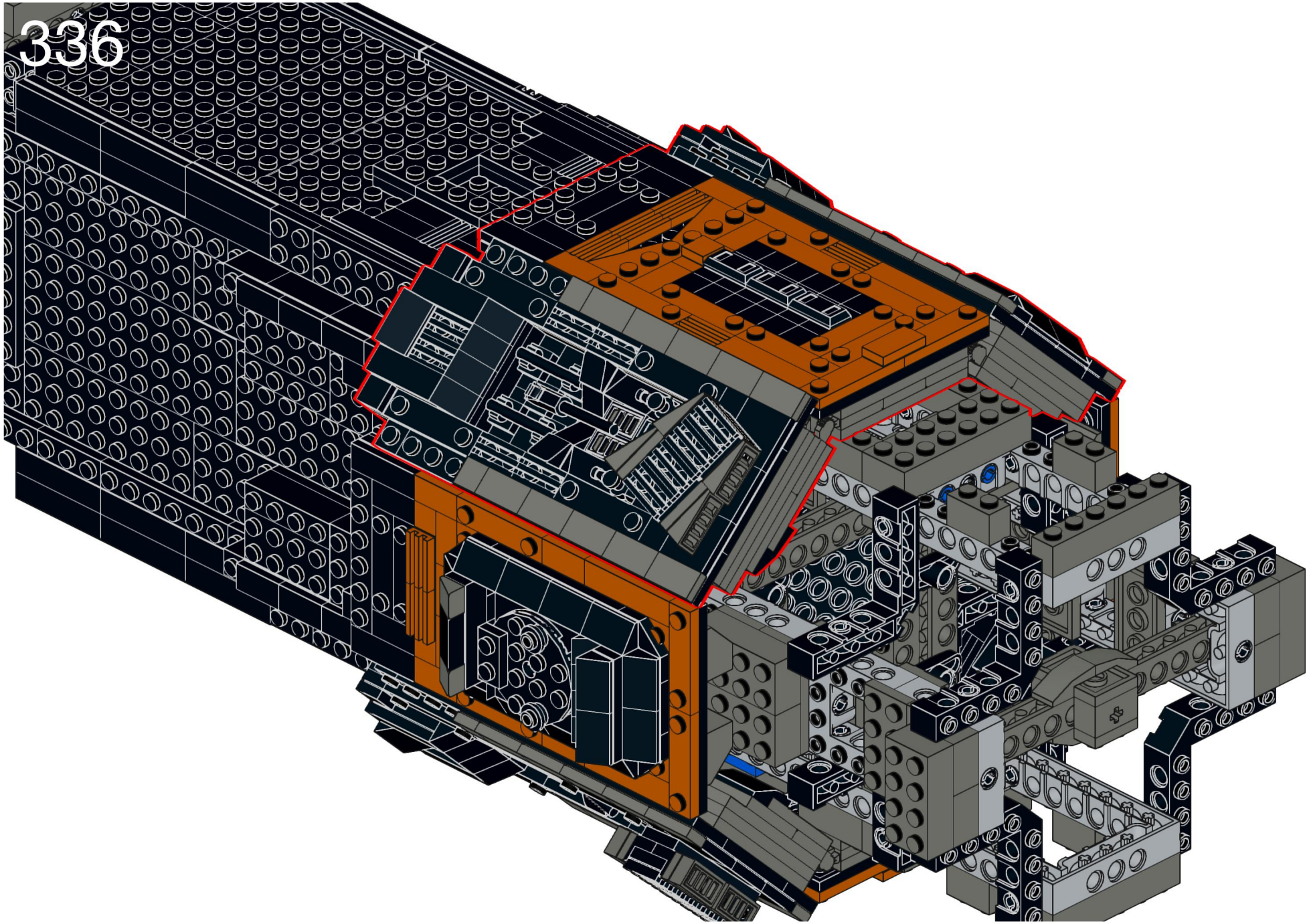

Designed by Michael Gertsch

337

1x

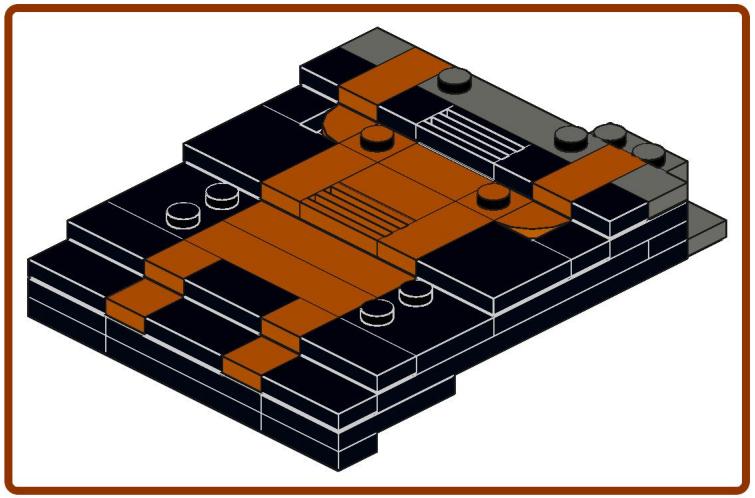

2x

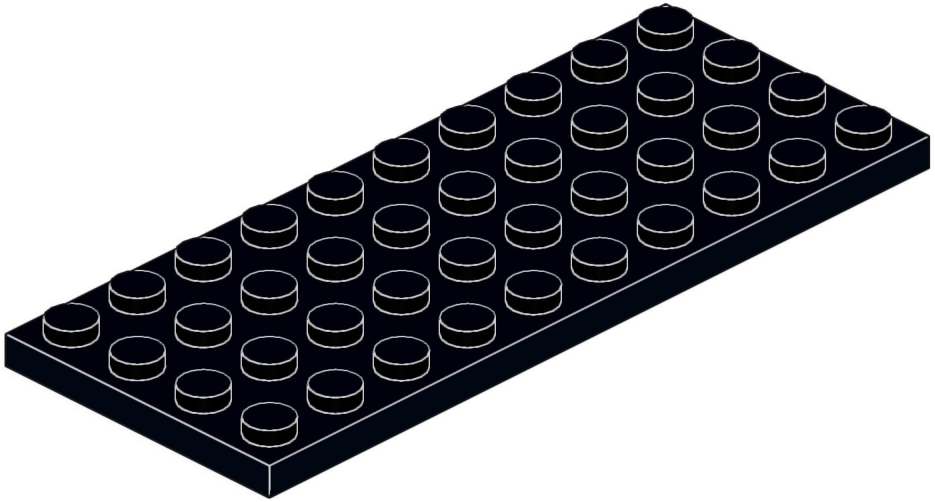

Designed by Michael Gertsch

338

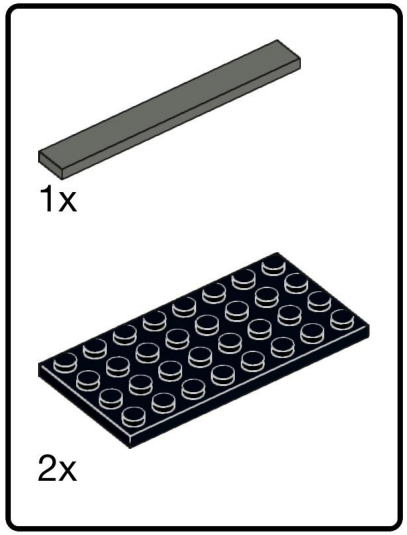

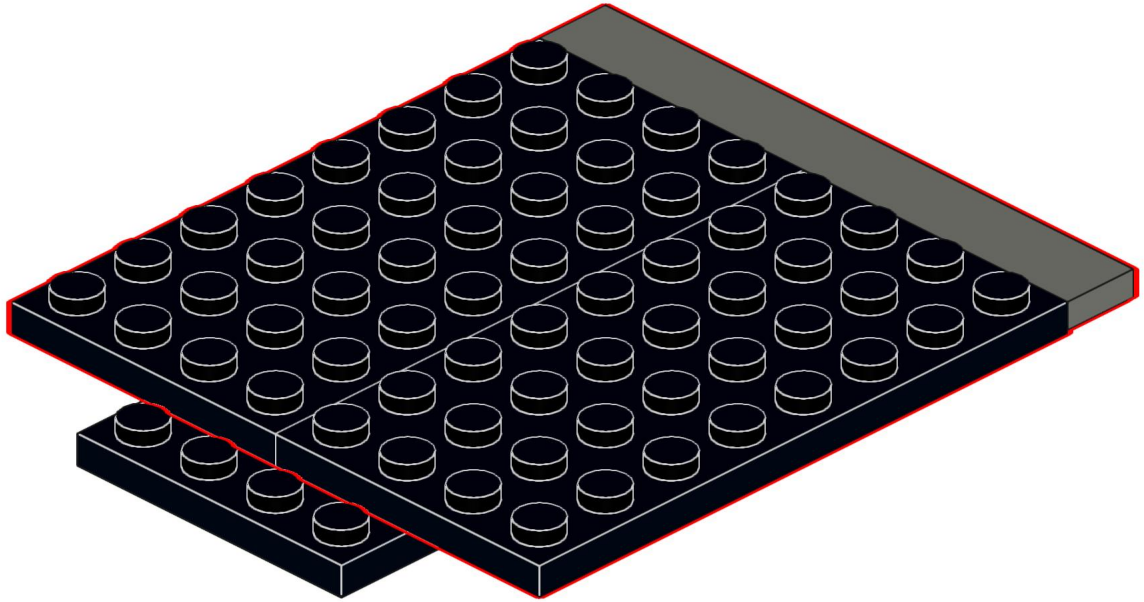

339

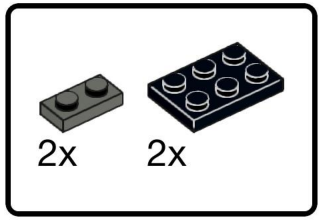

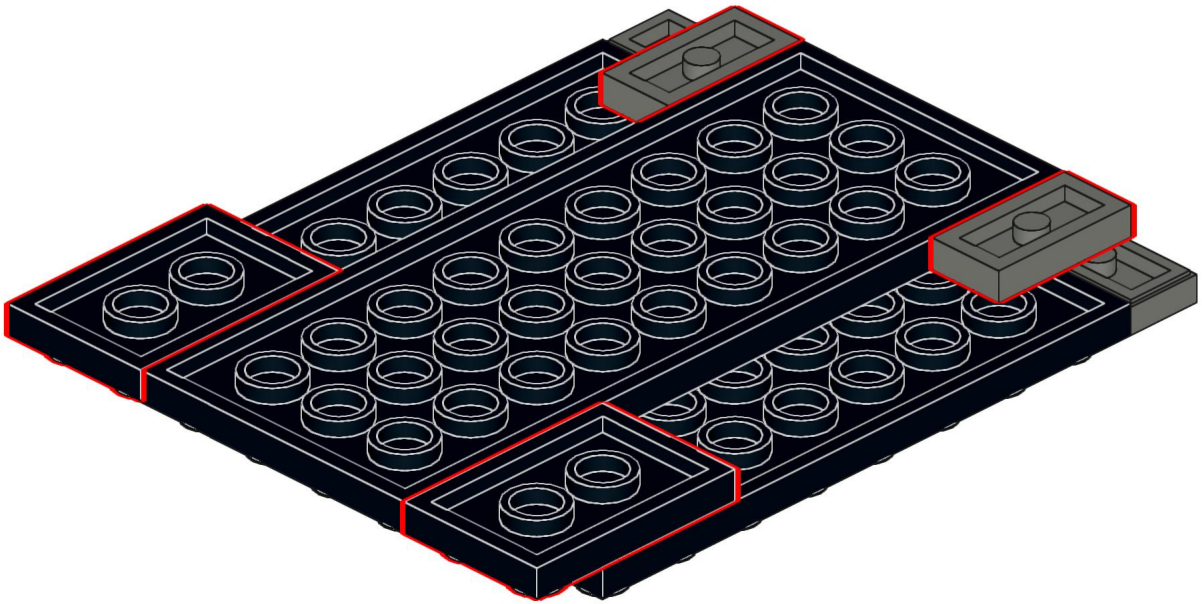

Designed by Michael Gertsch

340

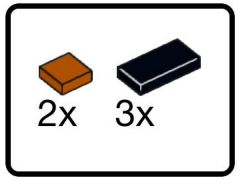

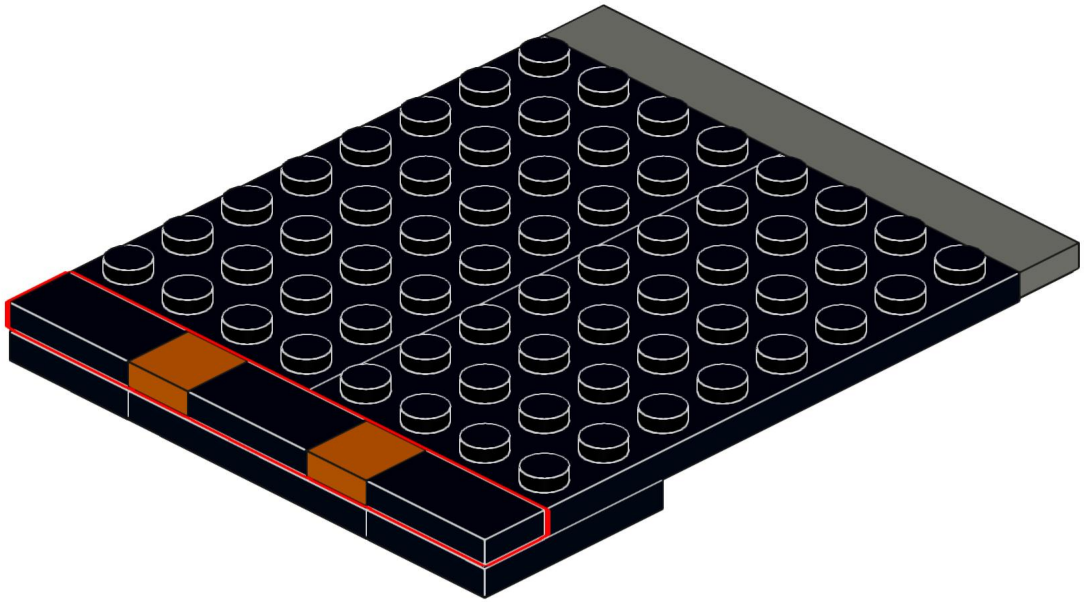

341

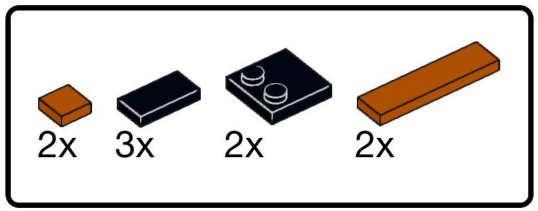

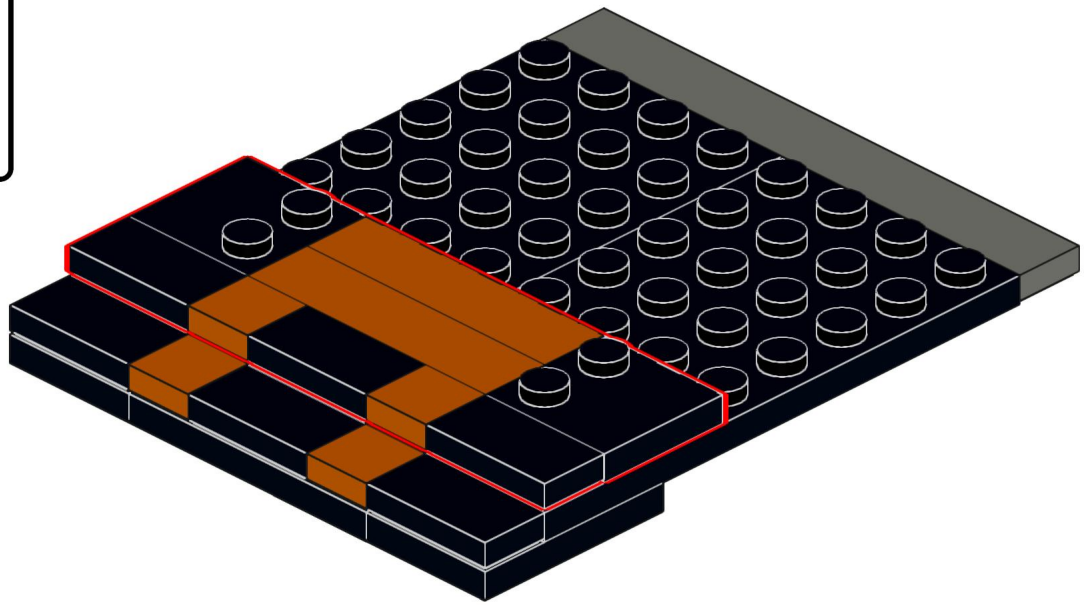

Designed by Michael Gertsch

342

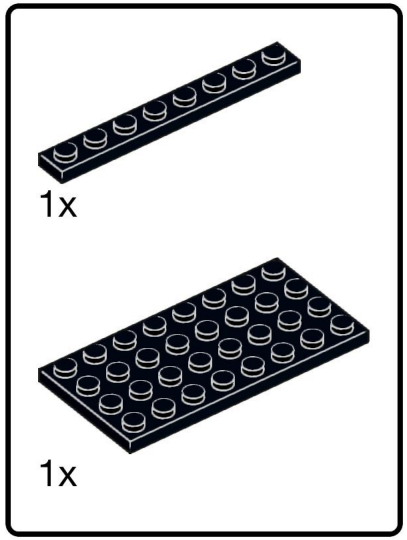

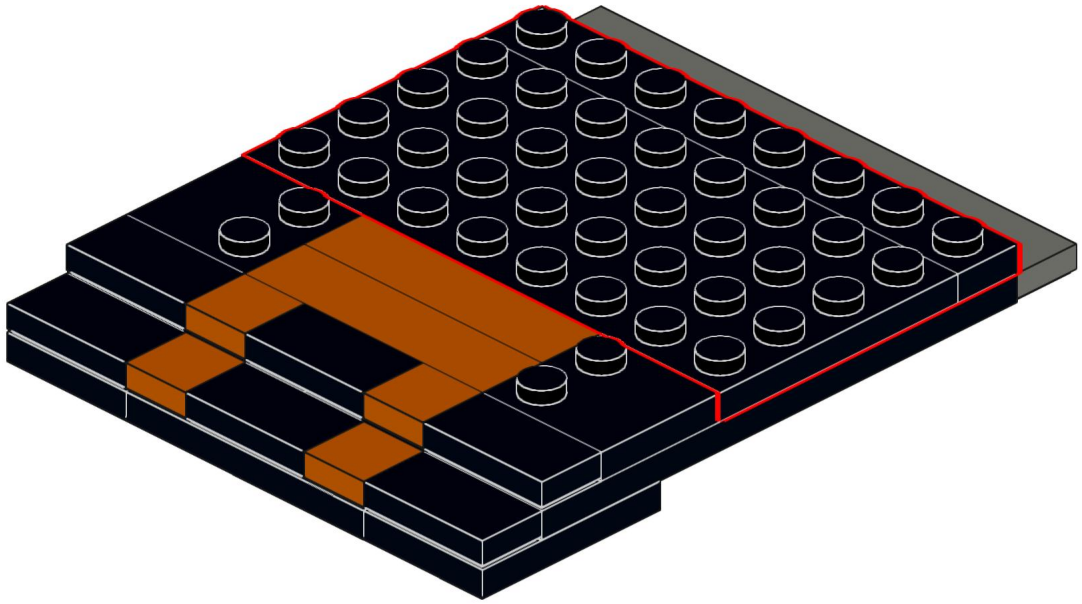

343

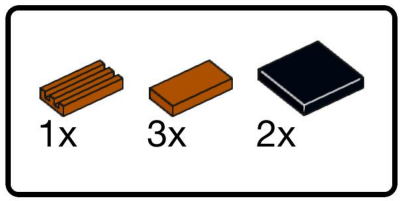

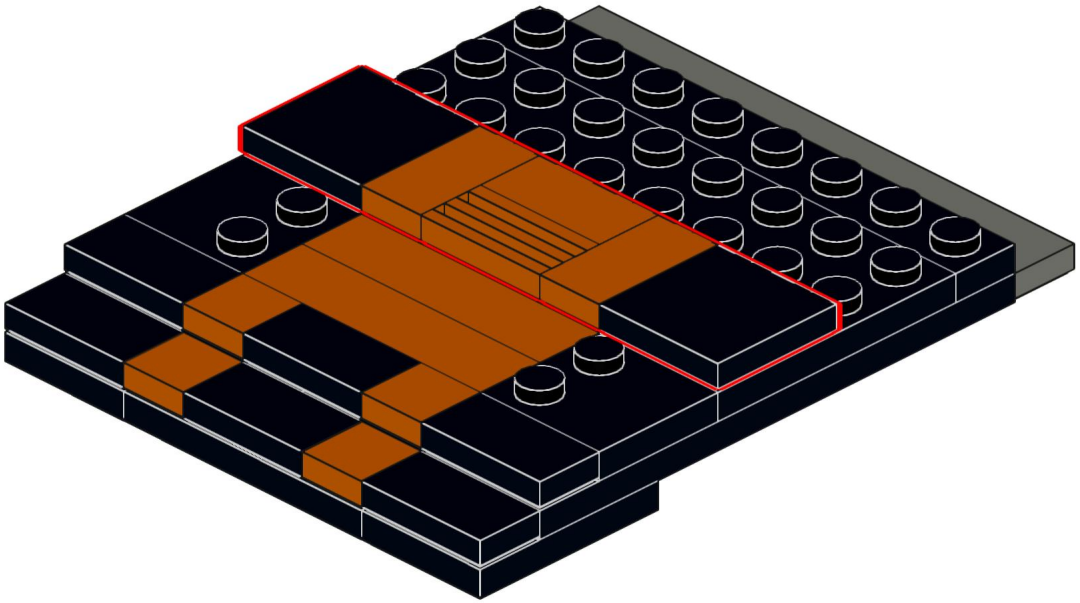

Designed by Michael Gertsch

344

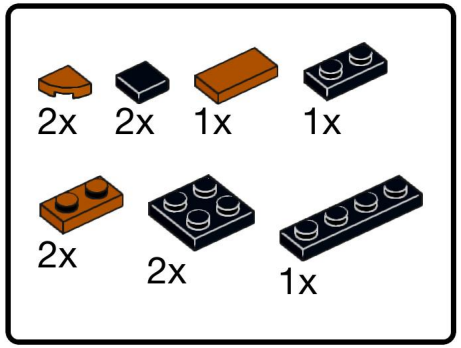

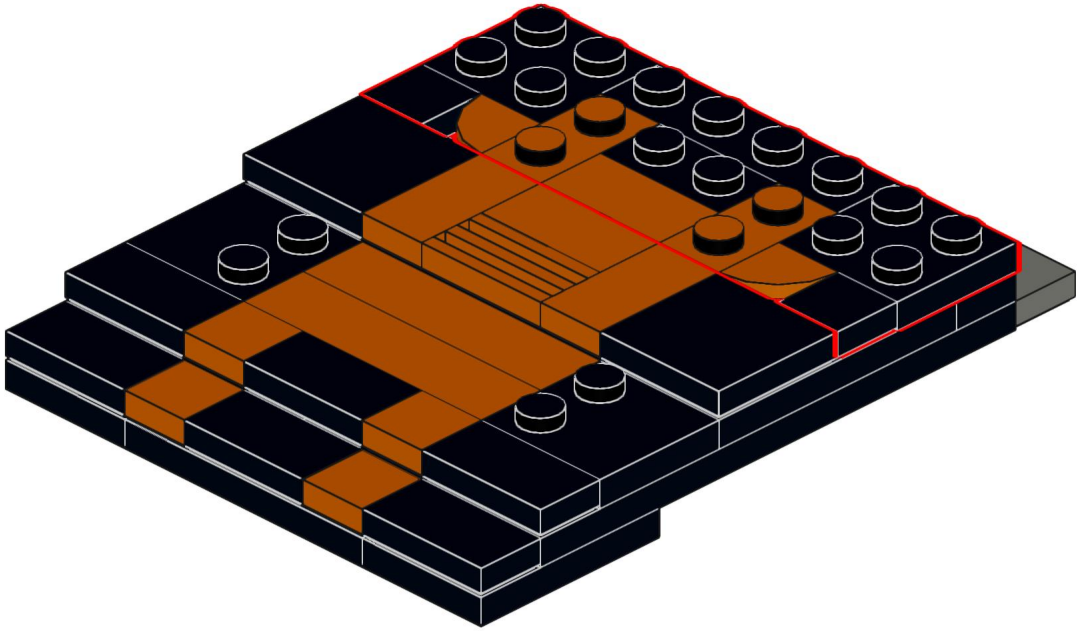

345

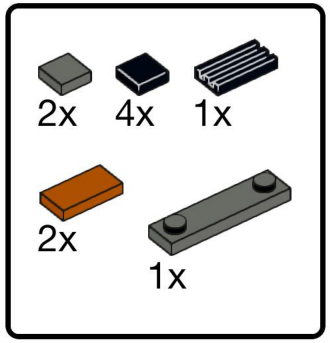

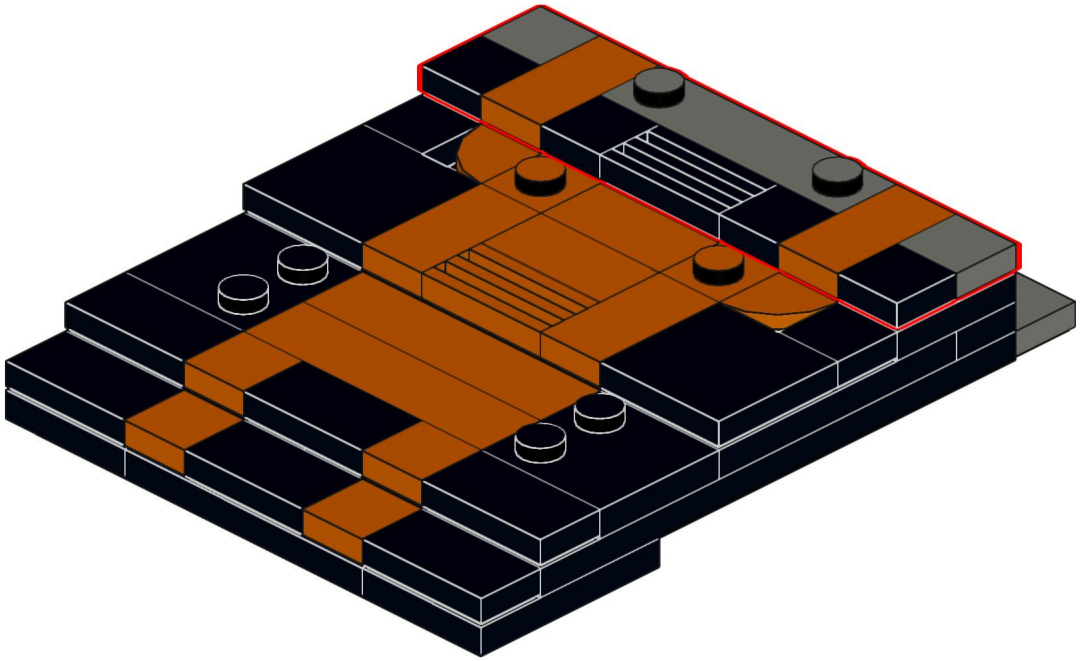

Designed by Michael Gertsch

346

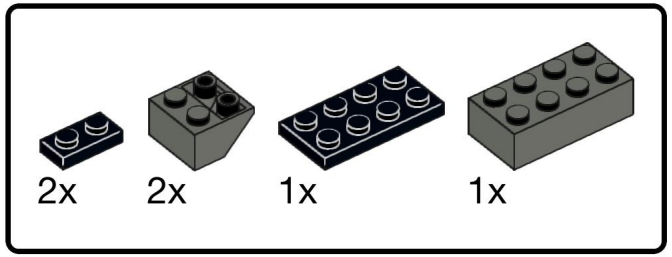

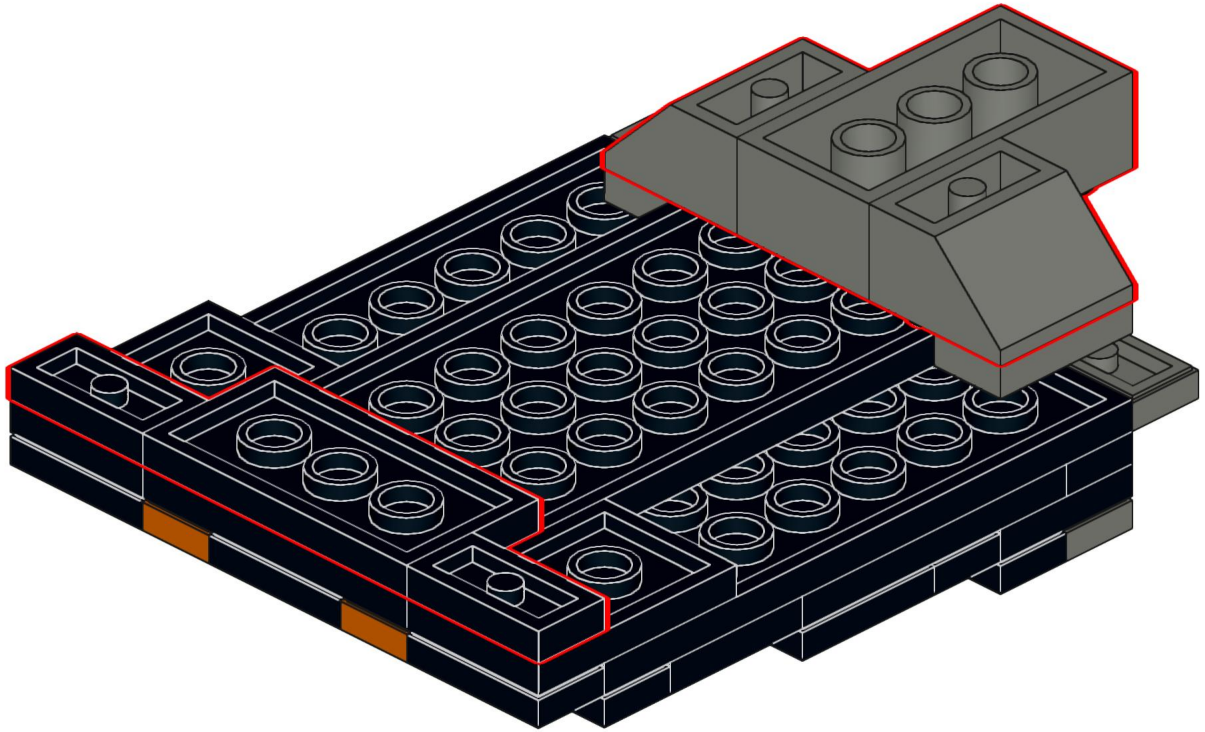
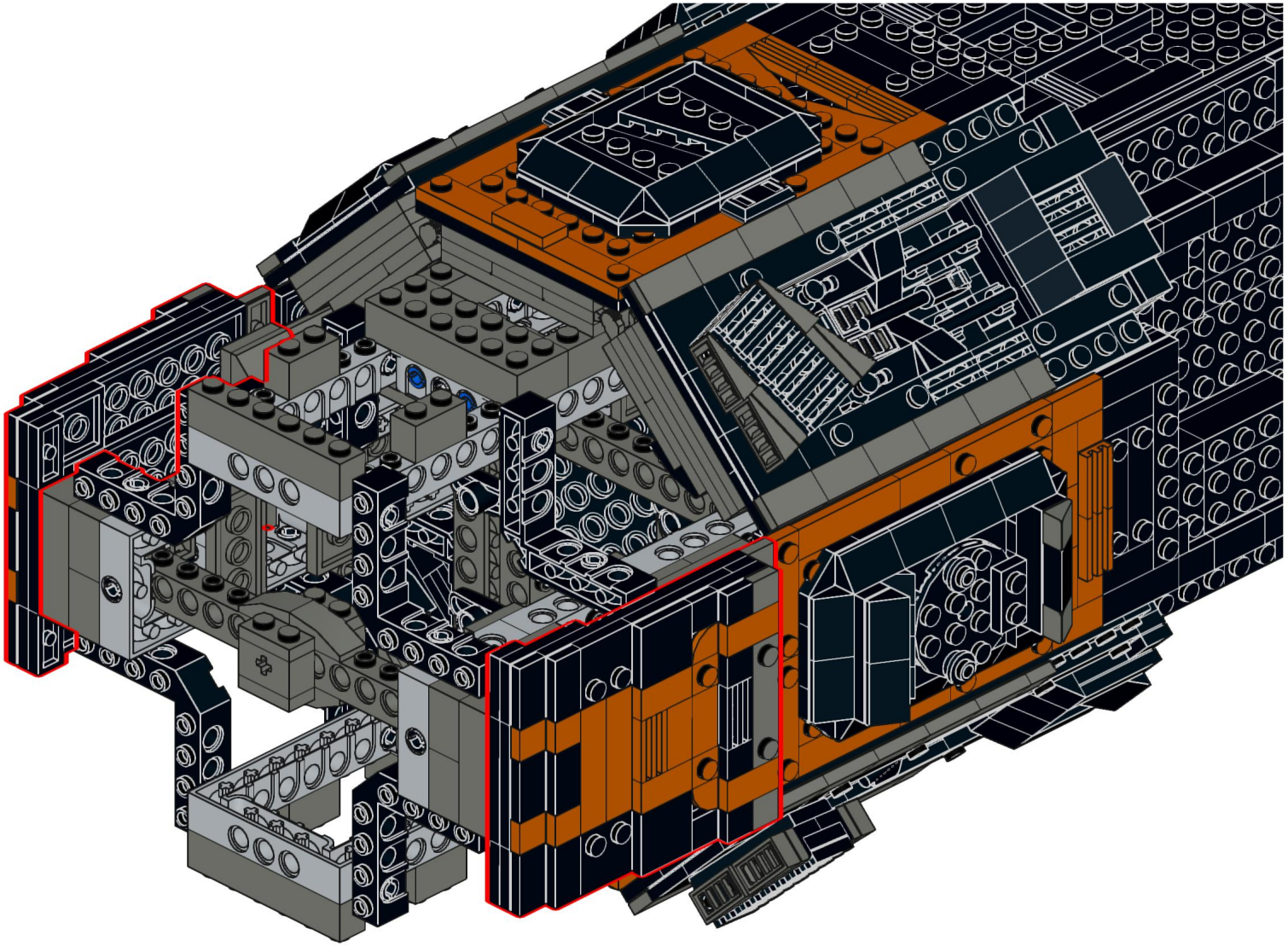
Designed by Michael Gertsch