MCRN Tachi

5'110 Pieces

748 Pages

1

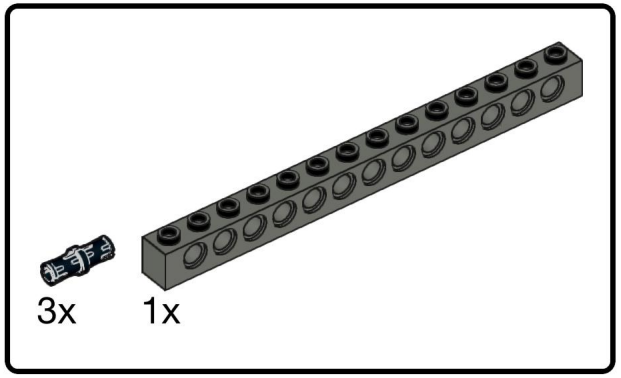

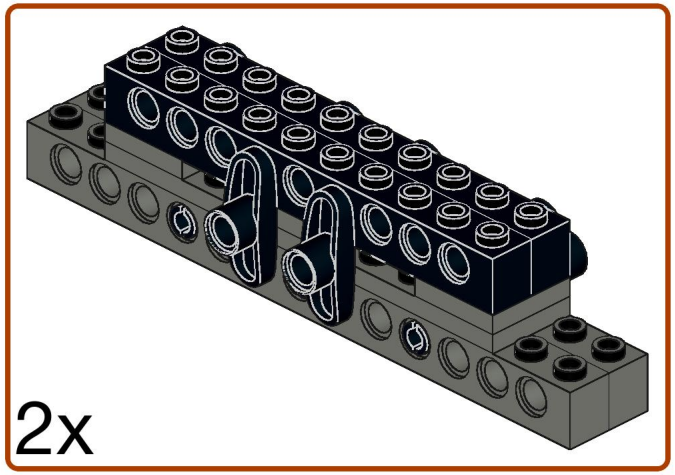

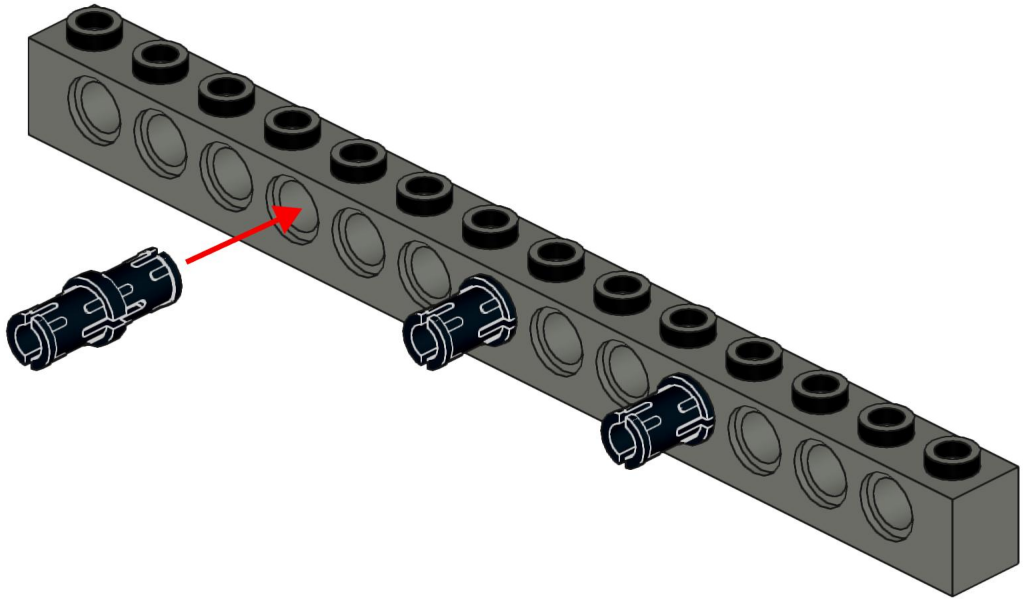

Designed by Michael Gertsch

2

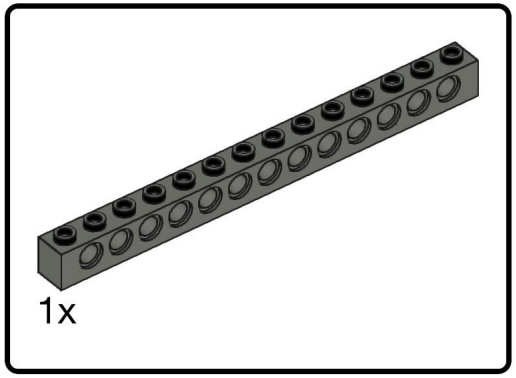

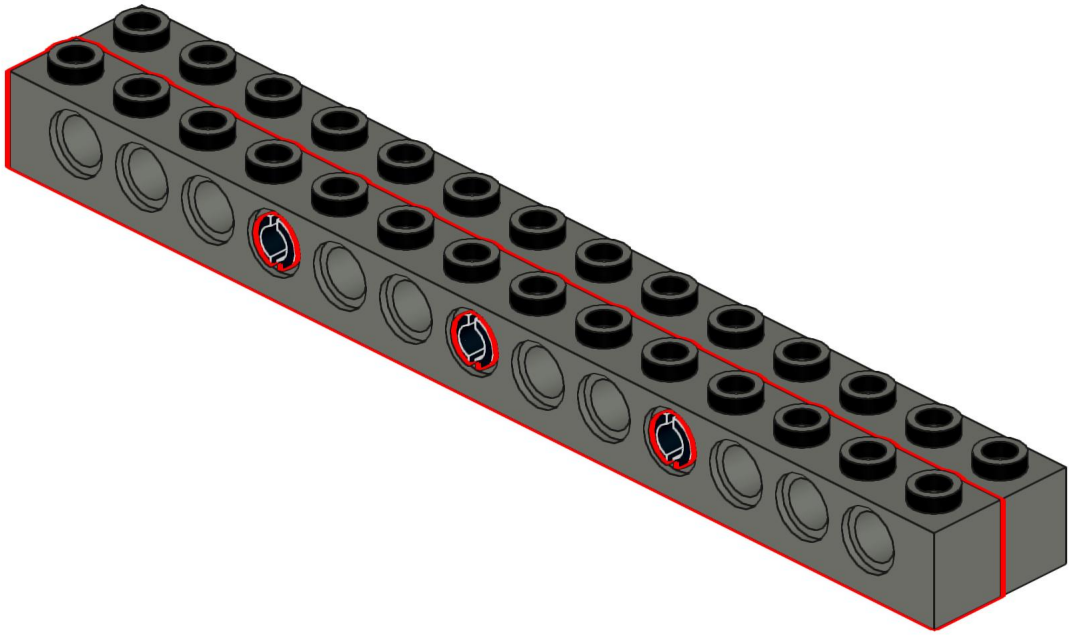

Designed by Michael Gertsch

3

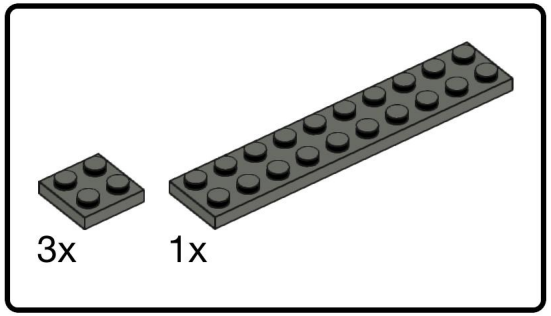

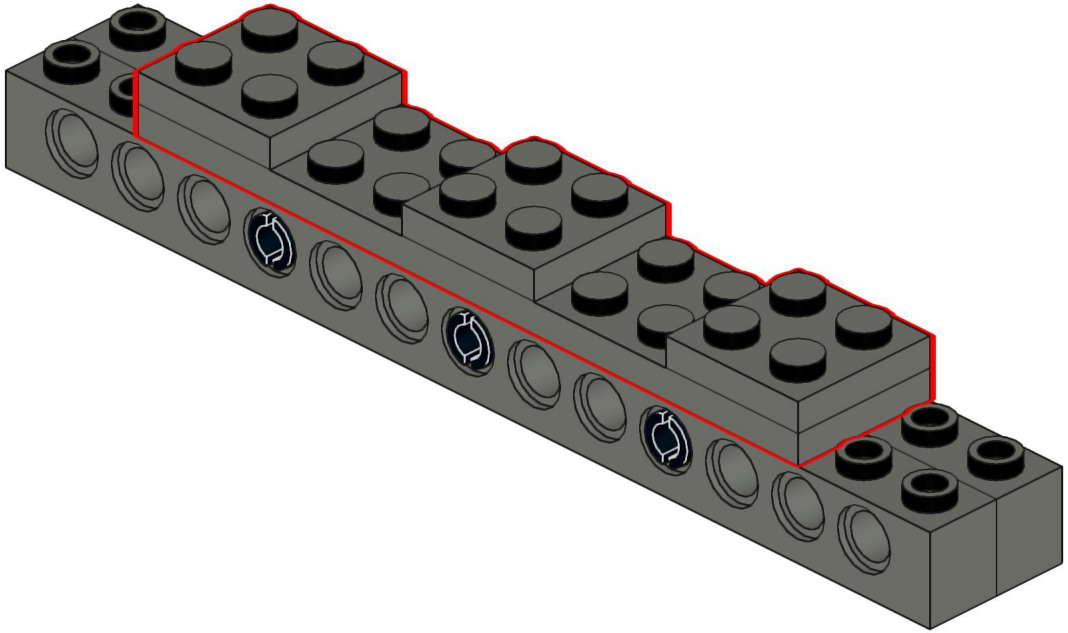

Designed by Michael Gertsch

4

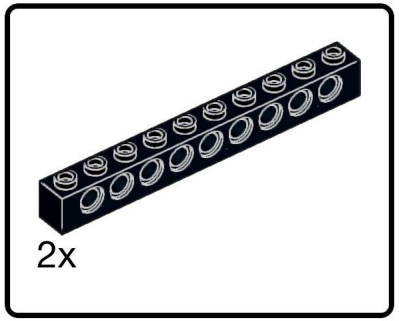

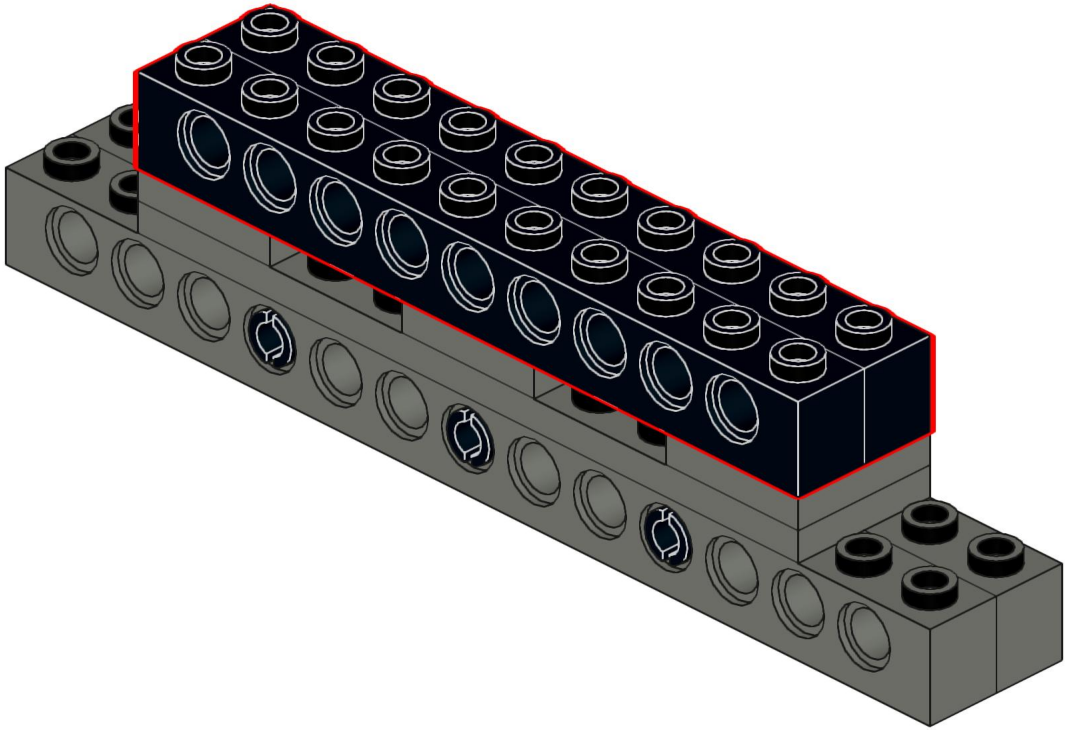

Designed by Michael Gertsch

5

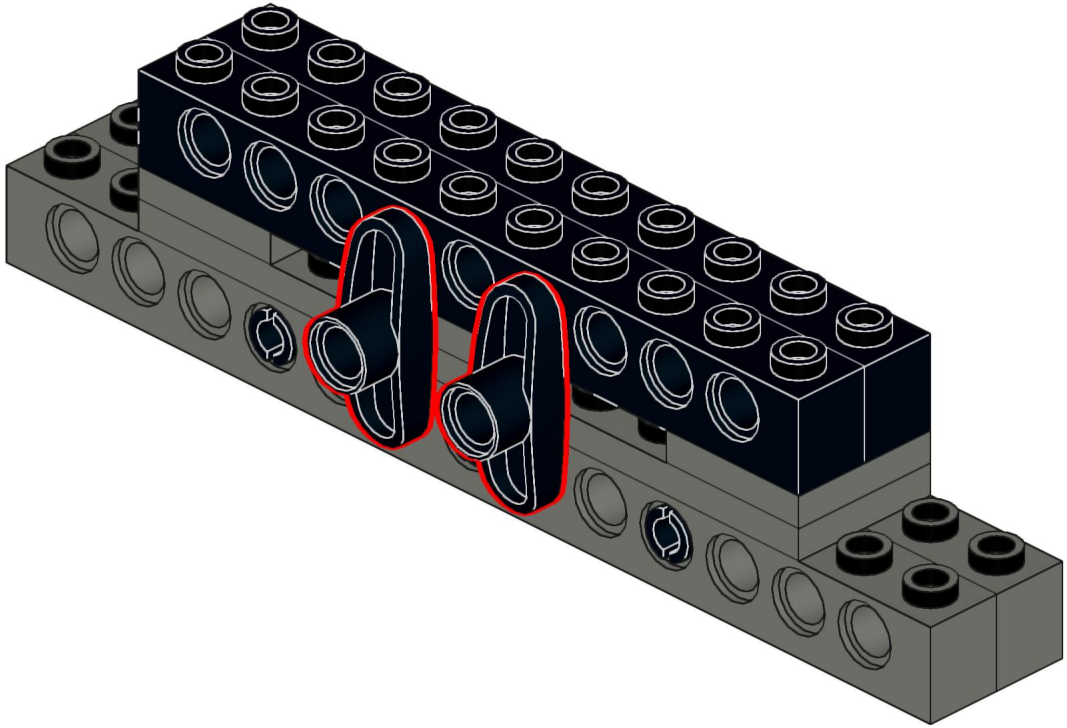

Designed by Michael Gertsch

6

4x

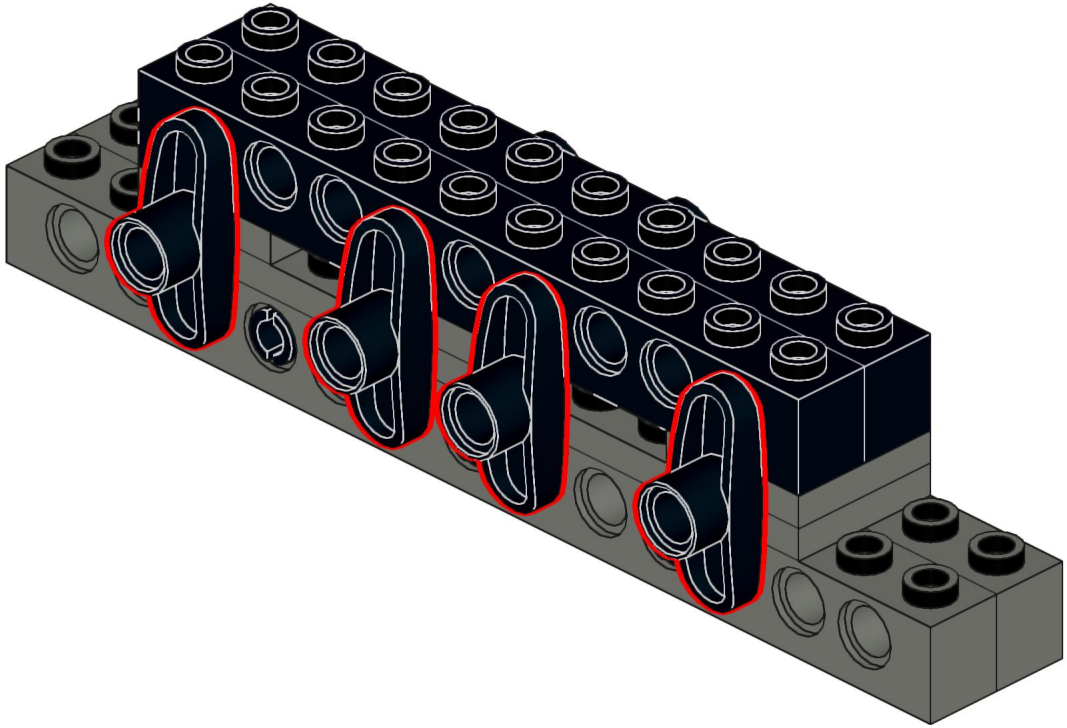

Designed by Michael Gertsch

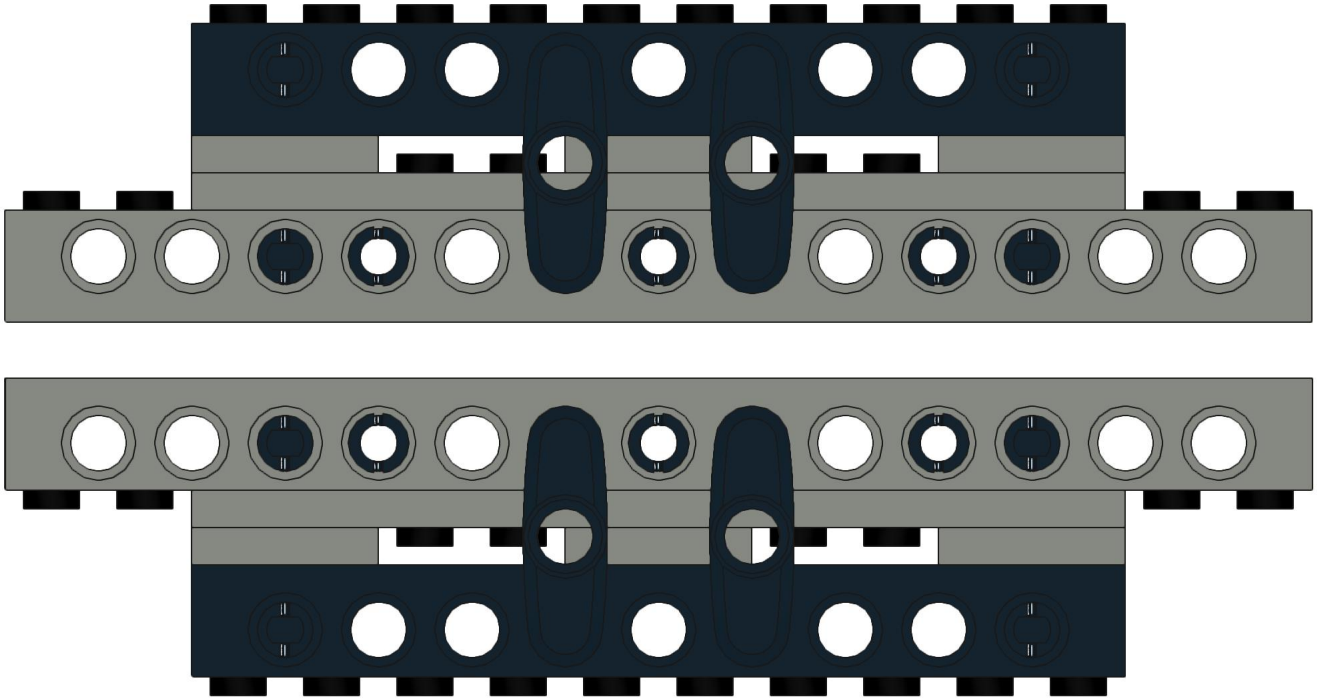

8

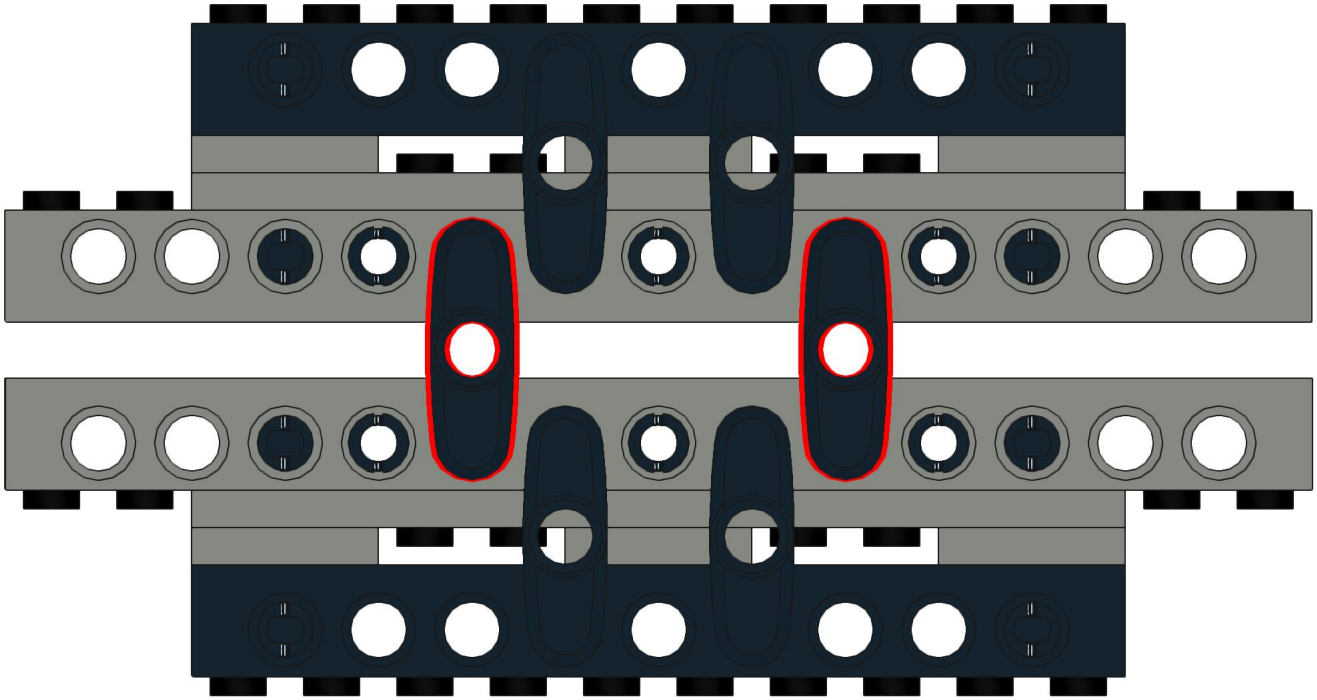

Designed by Michael Gertsch

9

2x

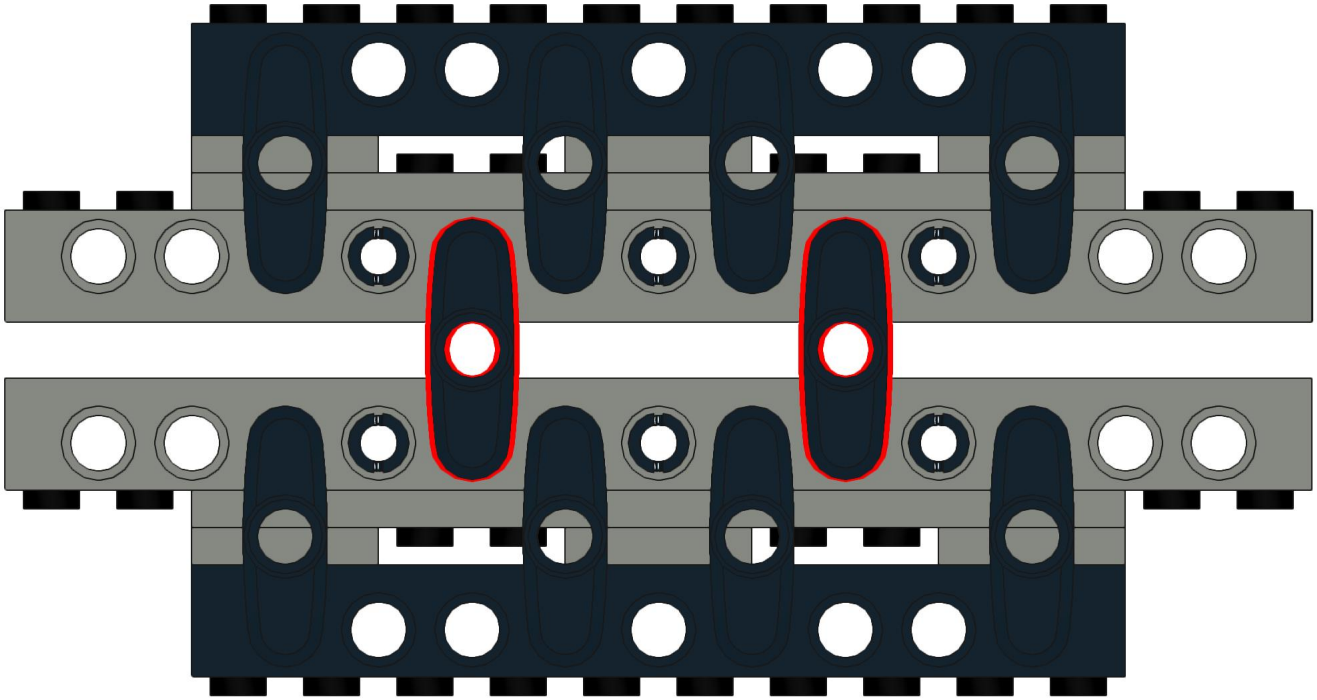

Designed by Michael Gertsch

10

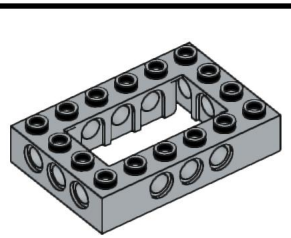

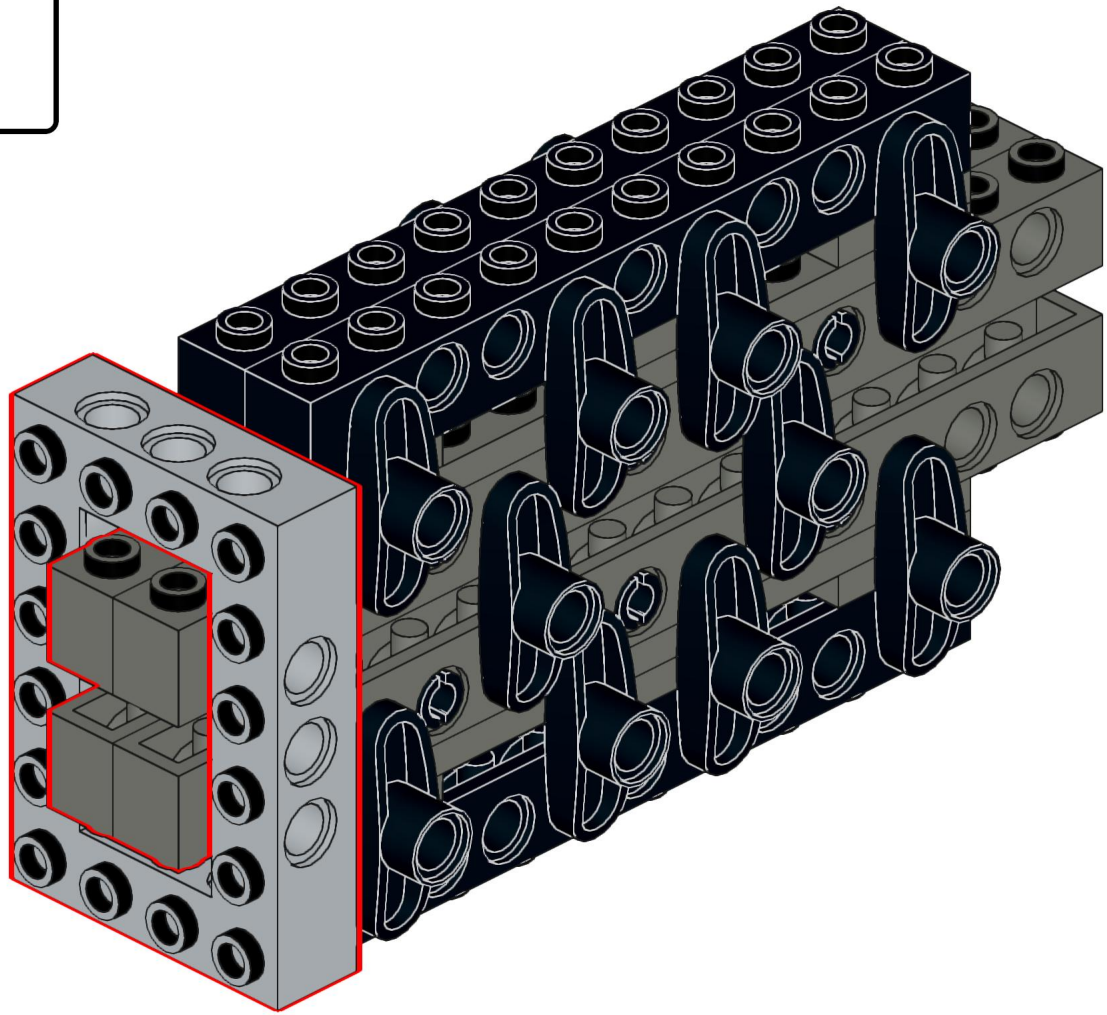

11

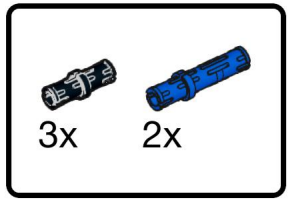

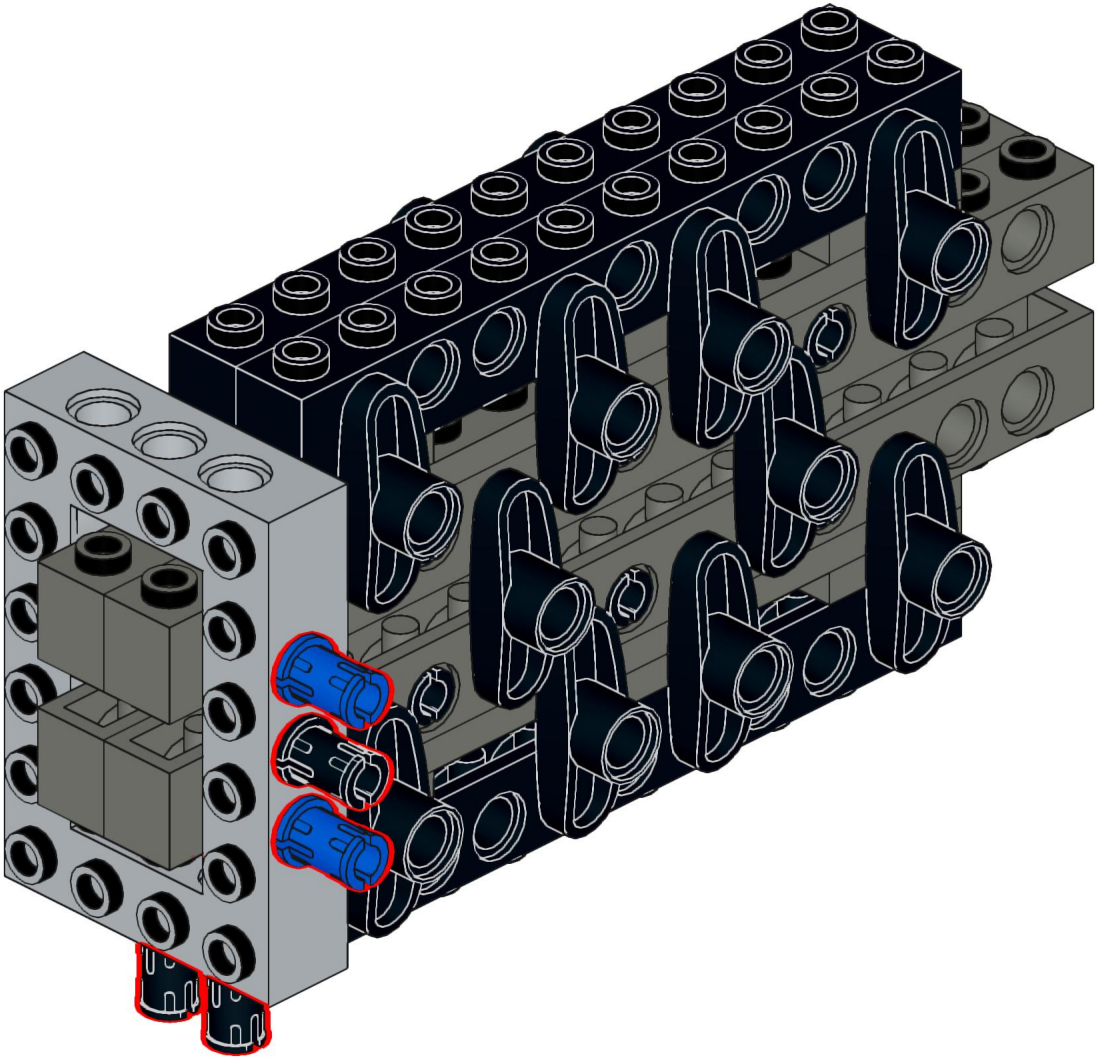

Designed by Michael Gertsch

12

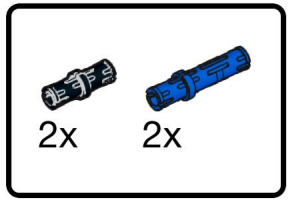

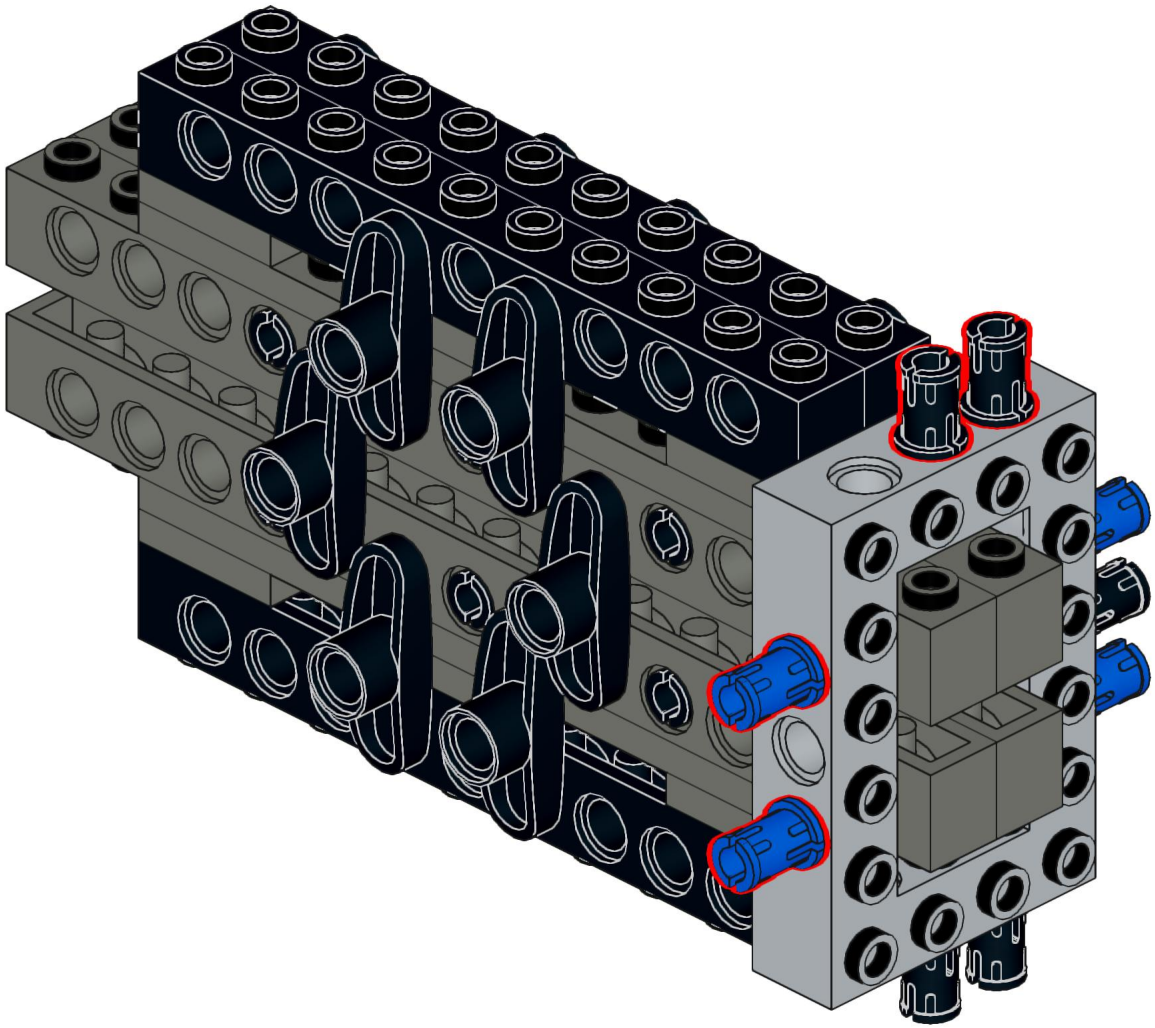

Designed by Michael Gertsch

13

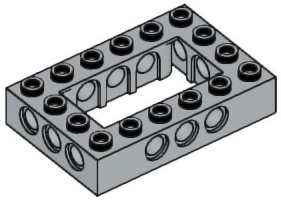

1x

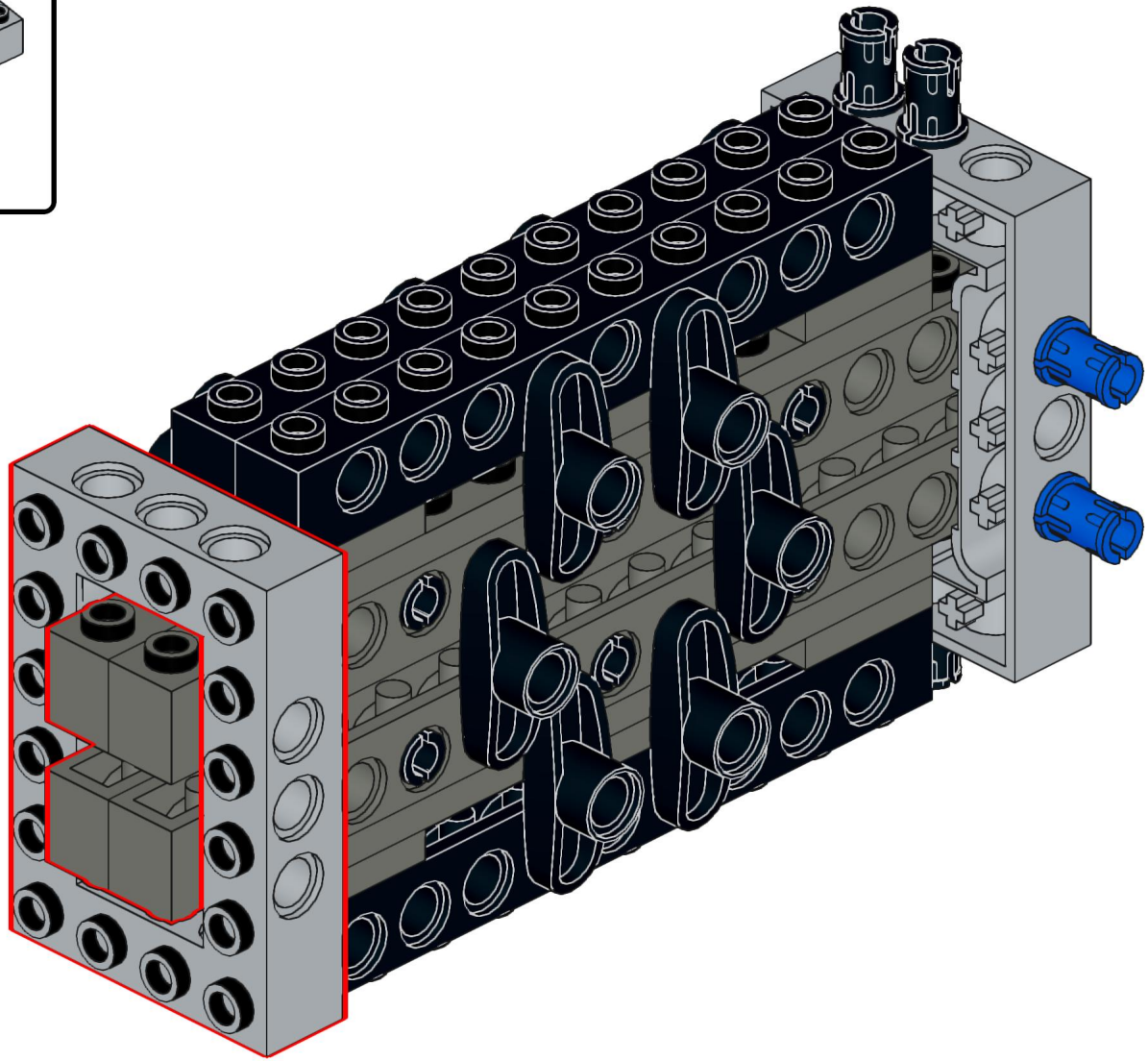

Designed by Michael Gertsch

14

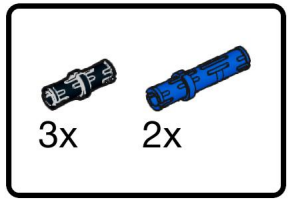

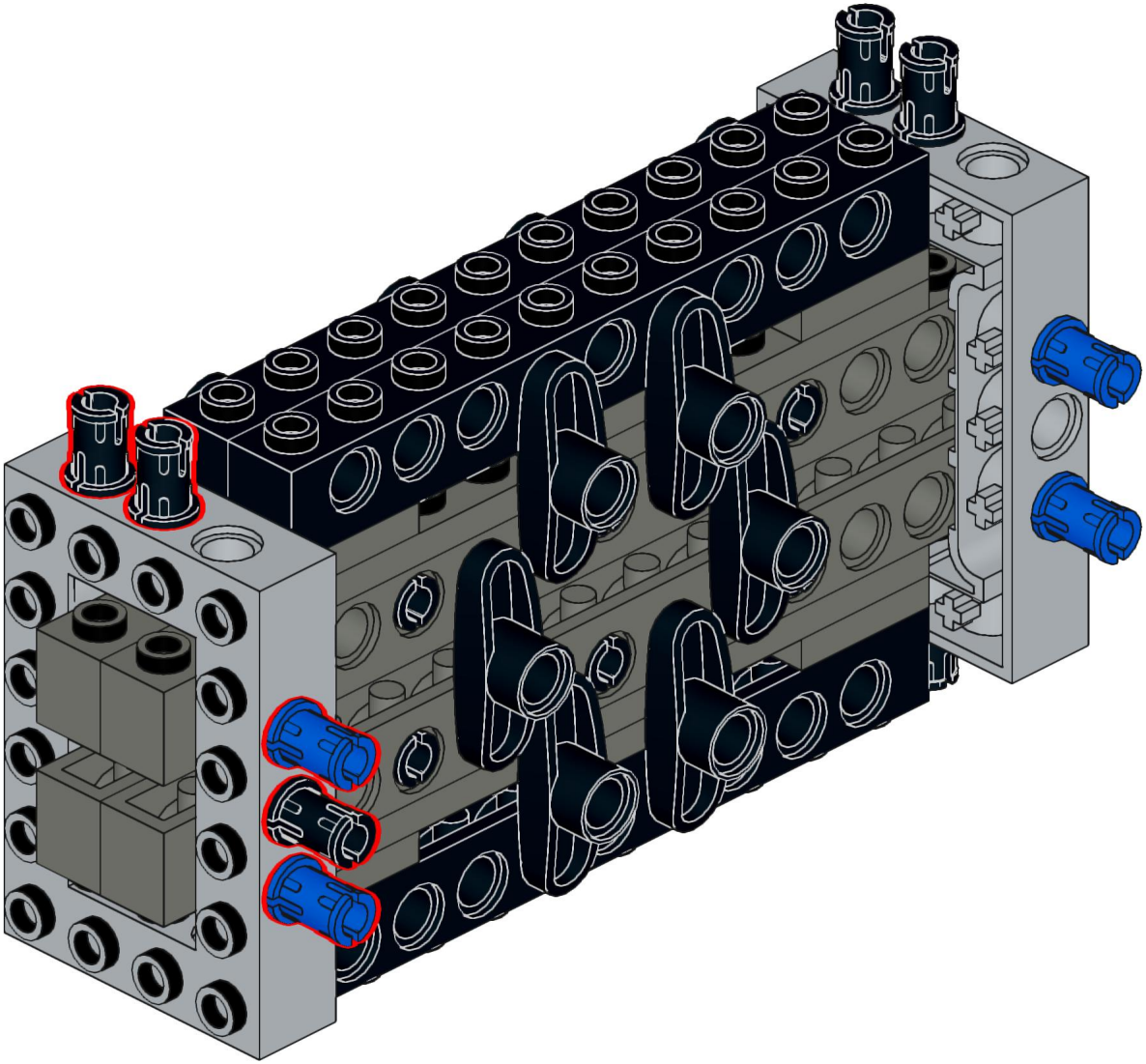

Designed by Michael Gertsch

15

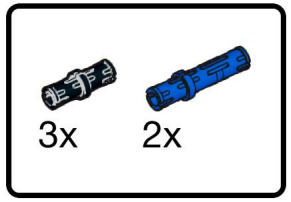

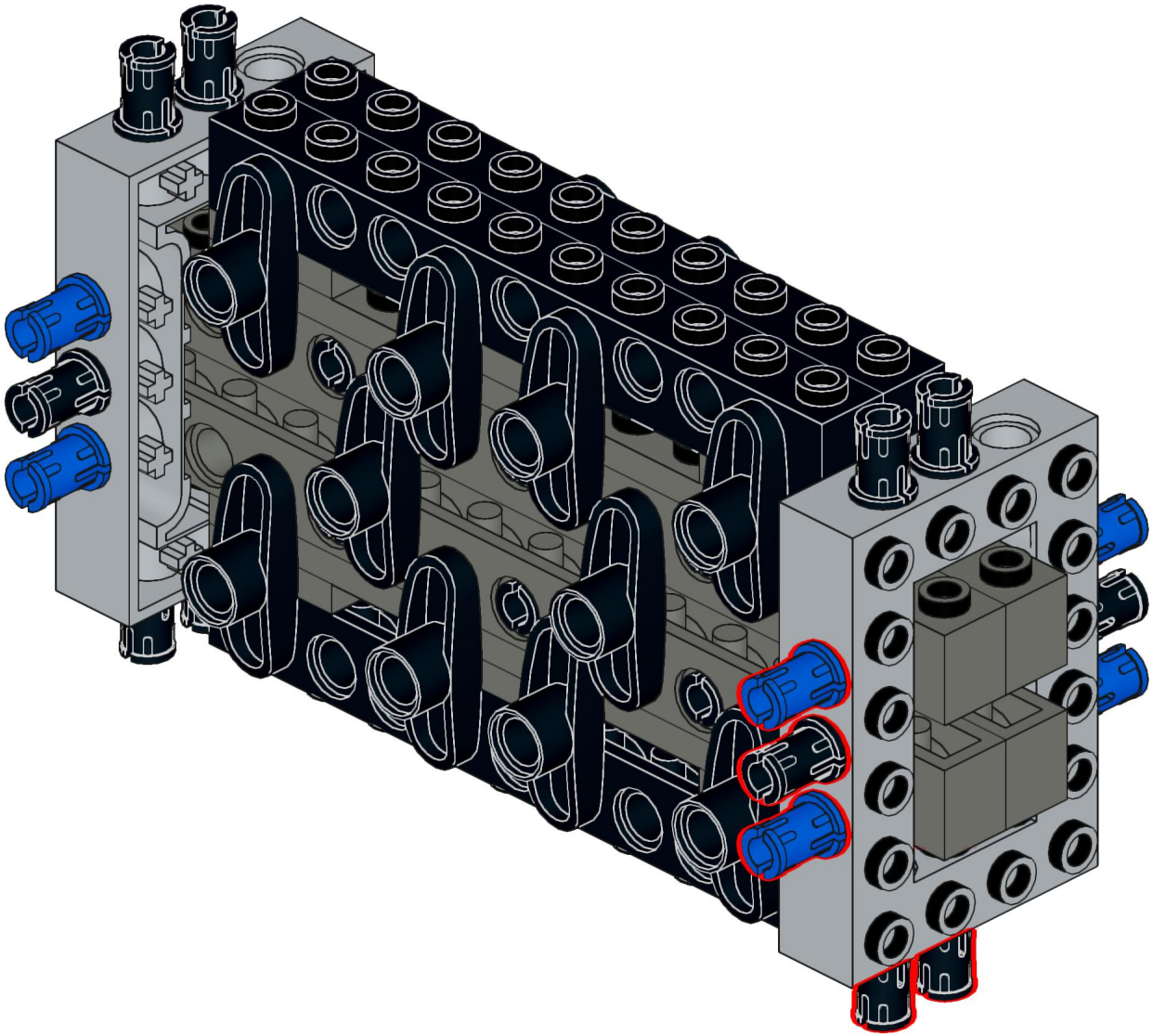

16

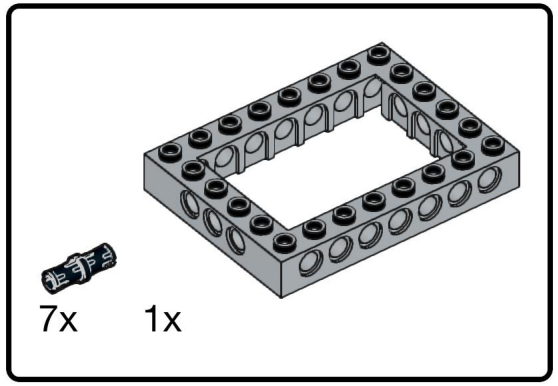

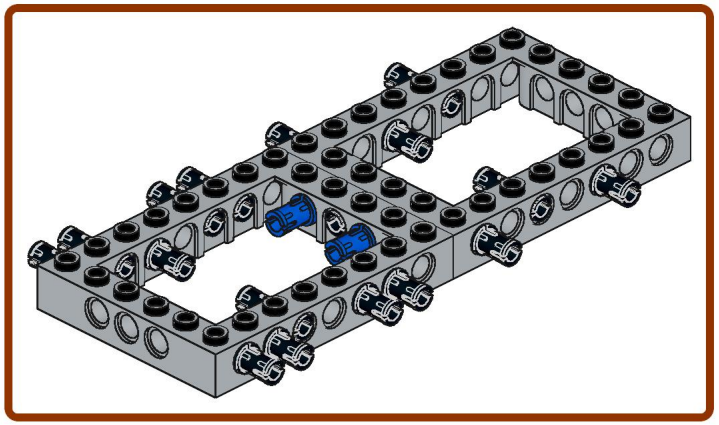

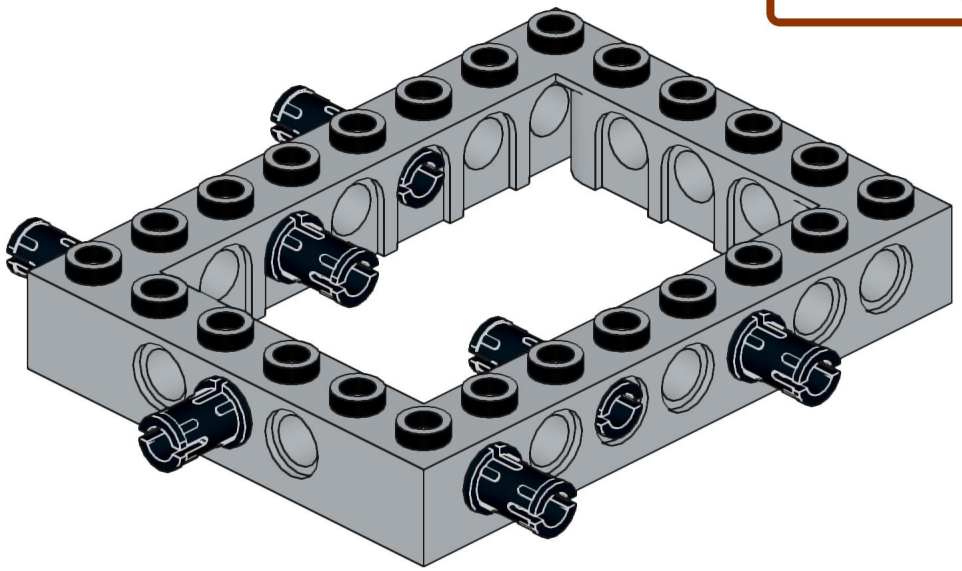

17

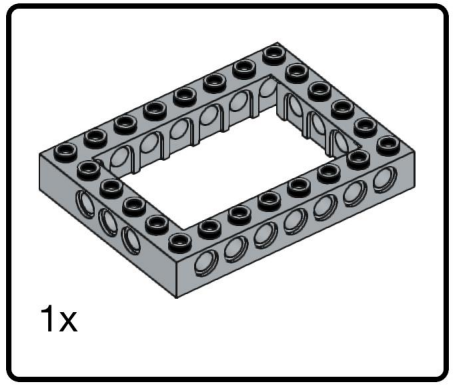

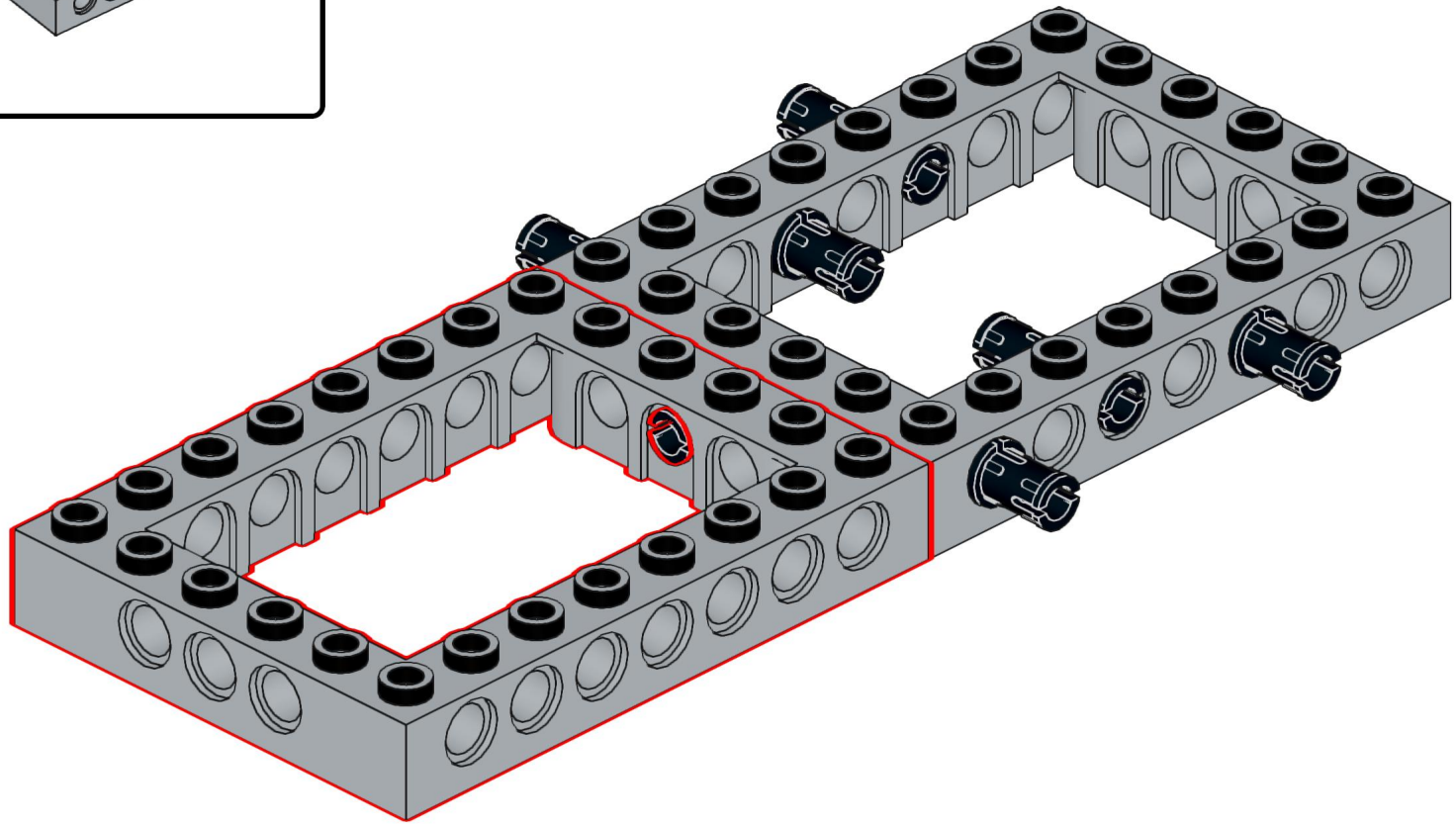

Designed by Michael Gertsch

18

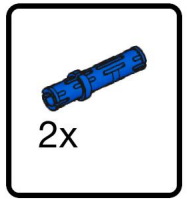

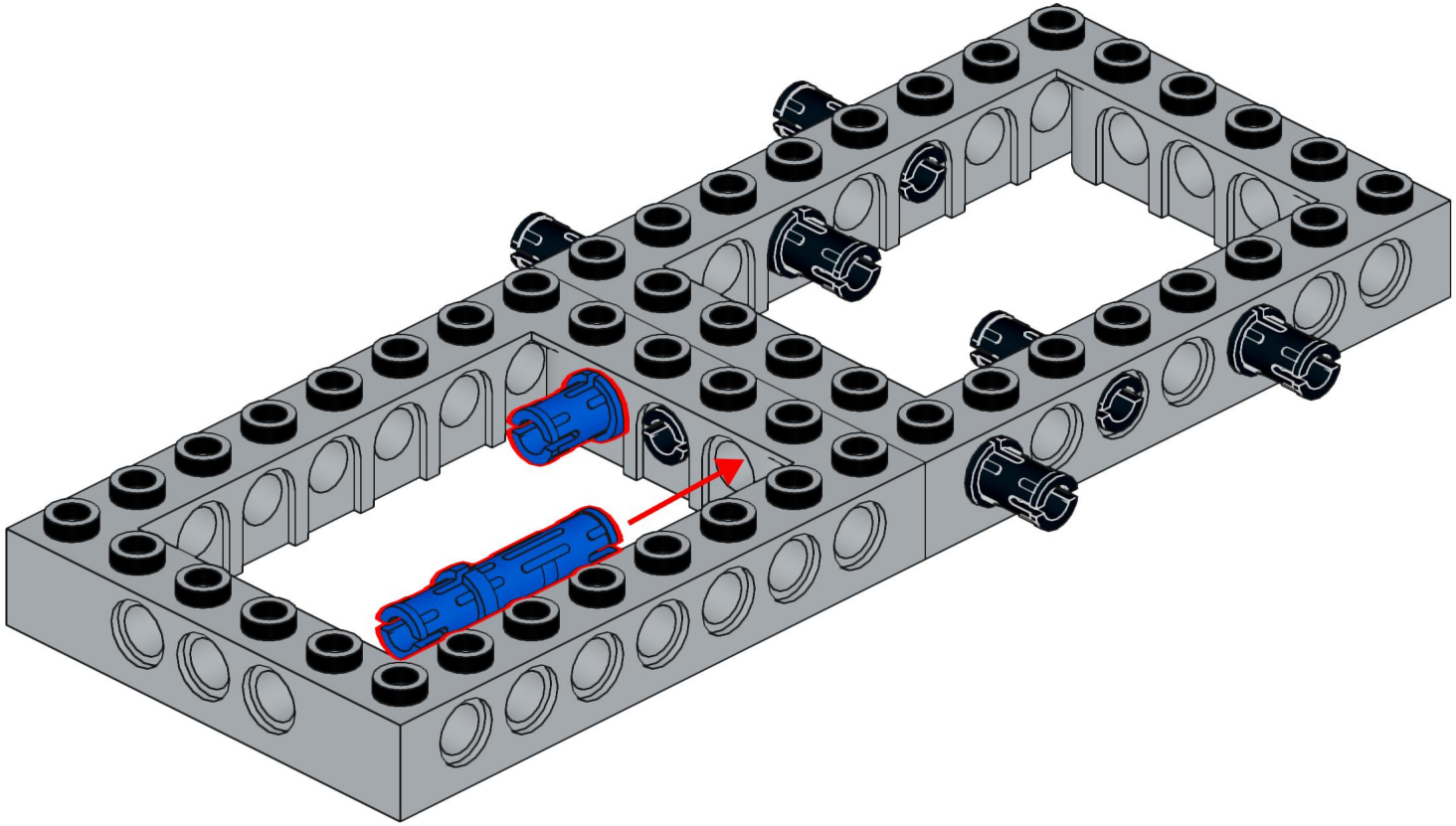

Designed by Michael Gertsch

19

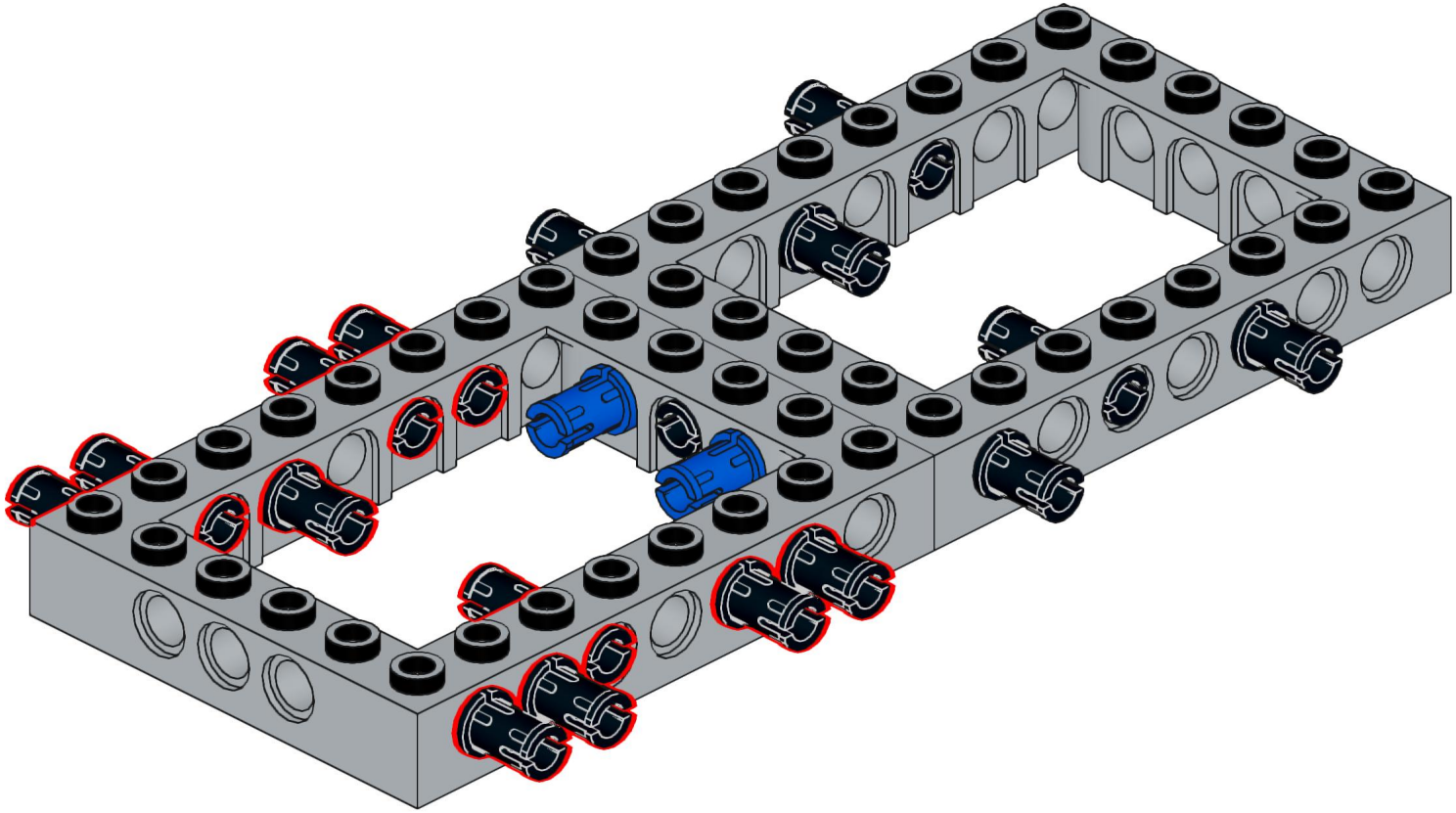

Designed by Michael Gertsch

20

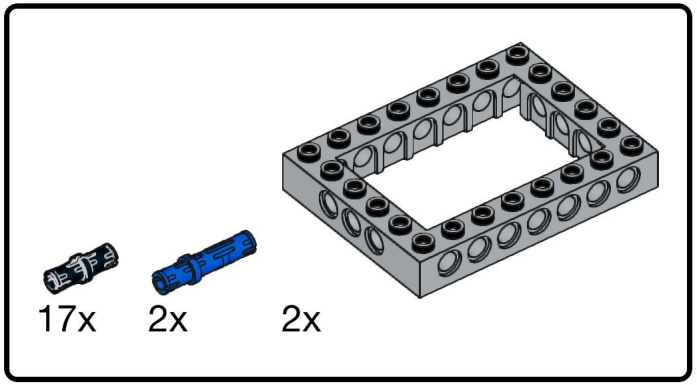

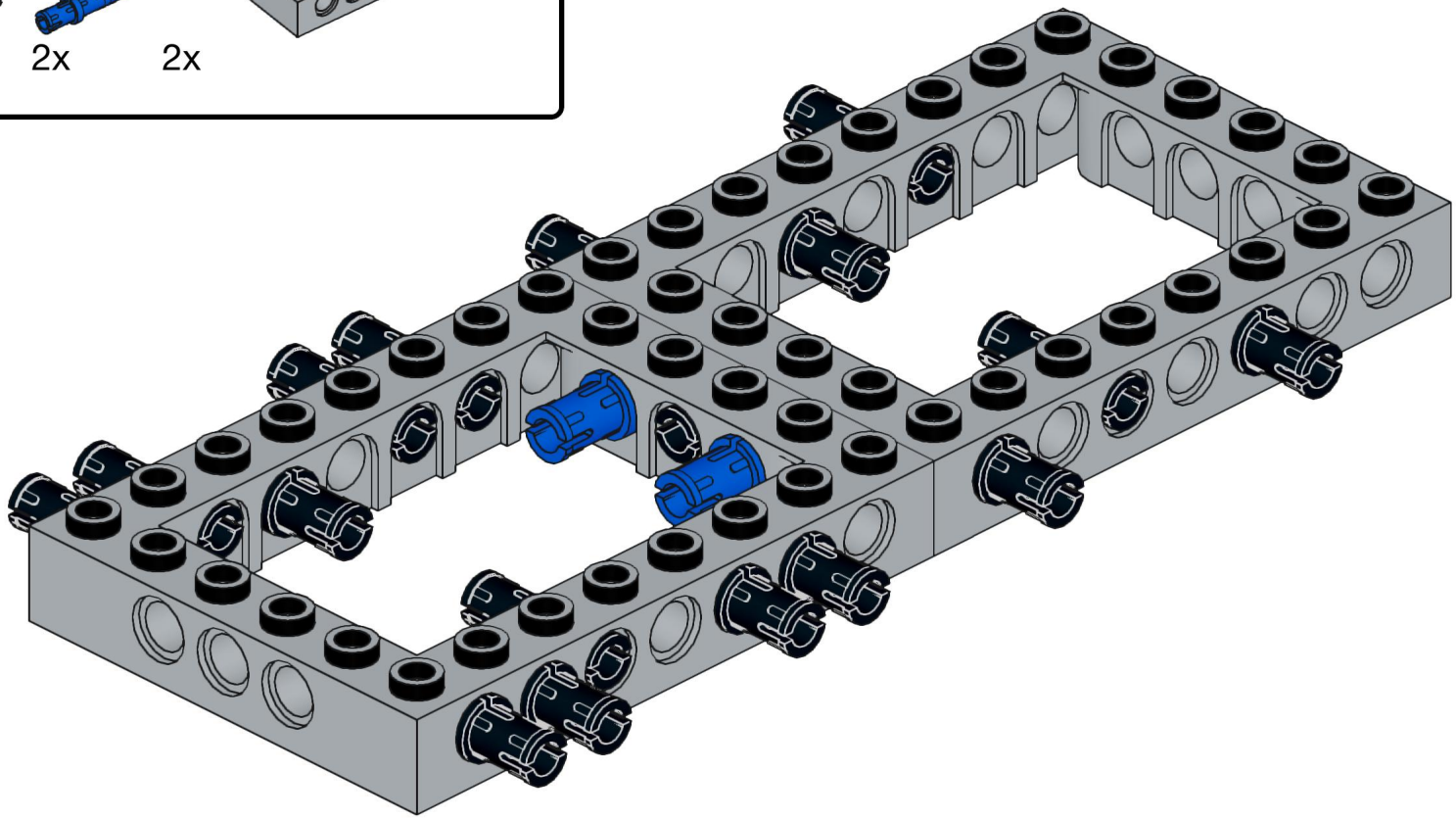

Designed by Michael Gertsch

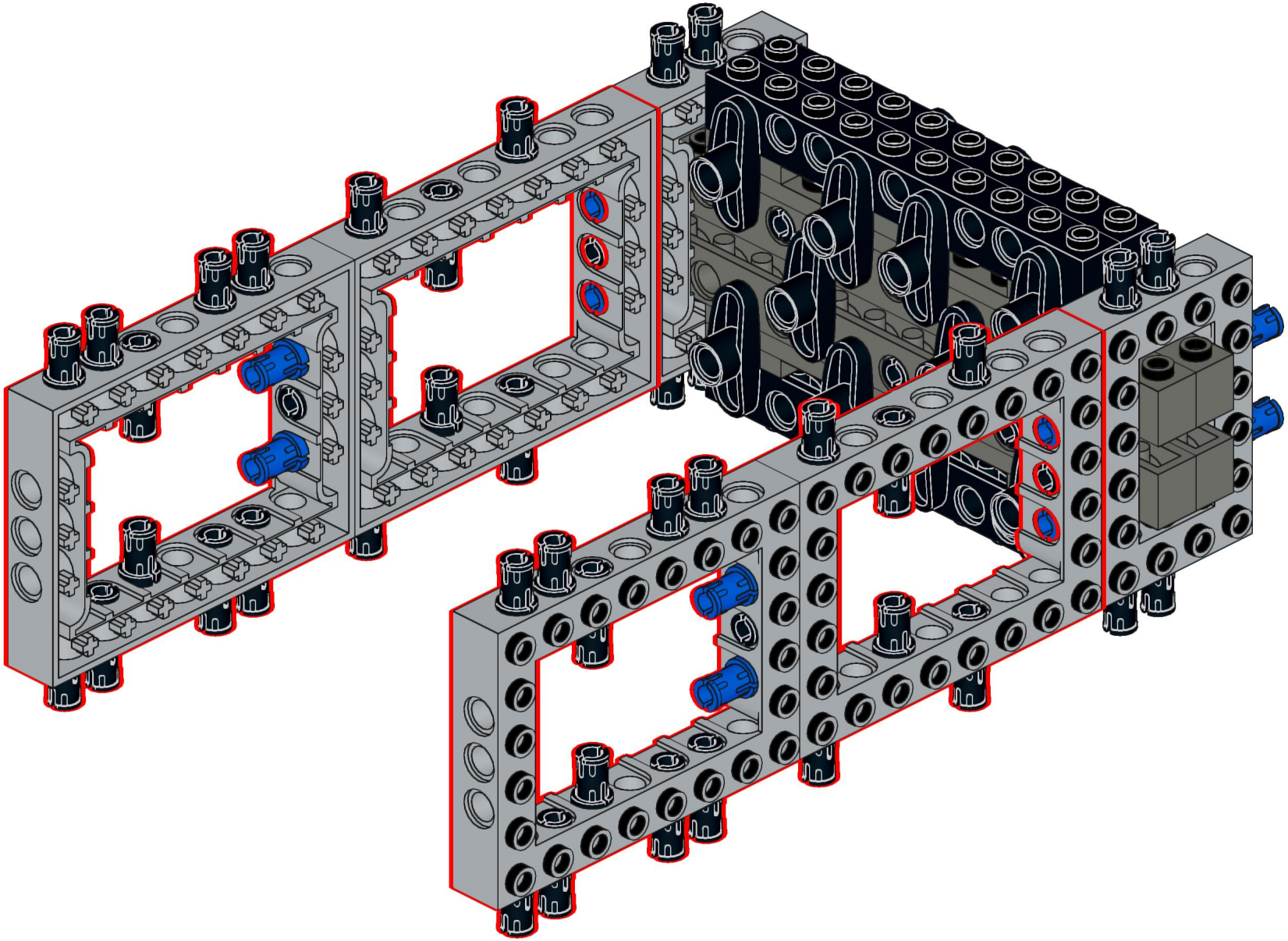

22

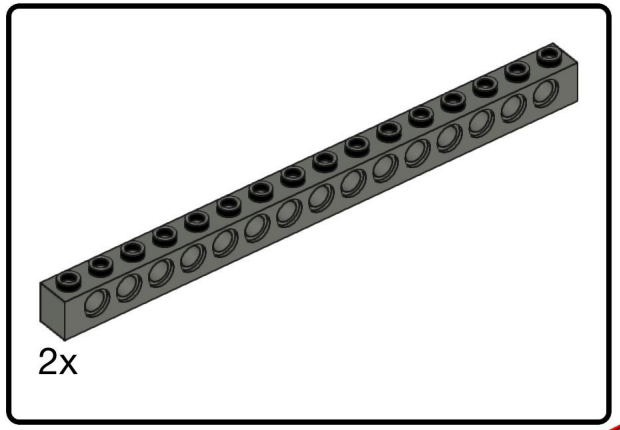

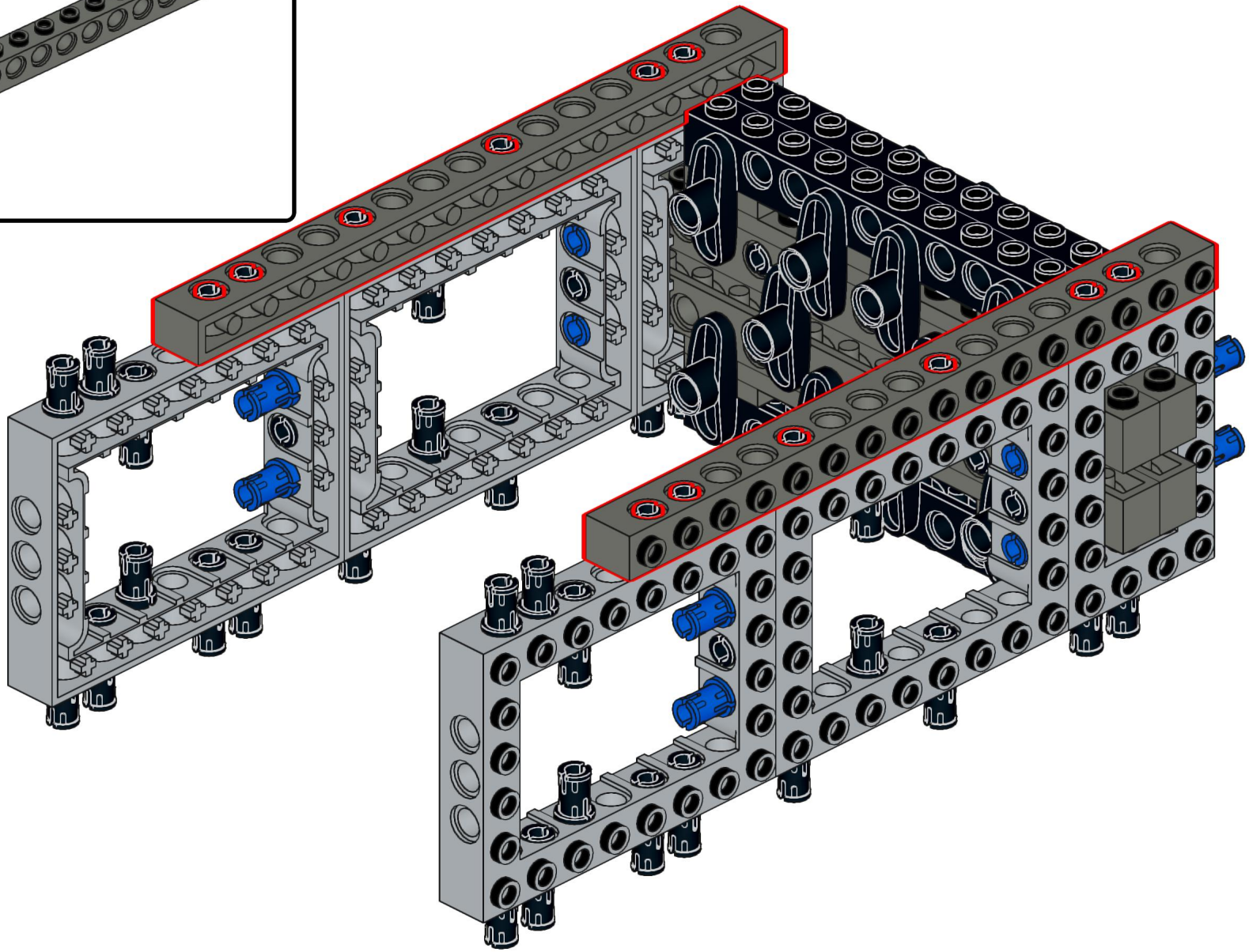

Designed by Michael Gertsch

23

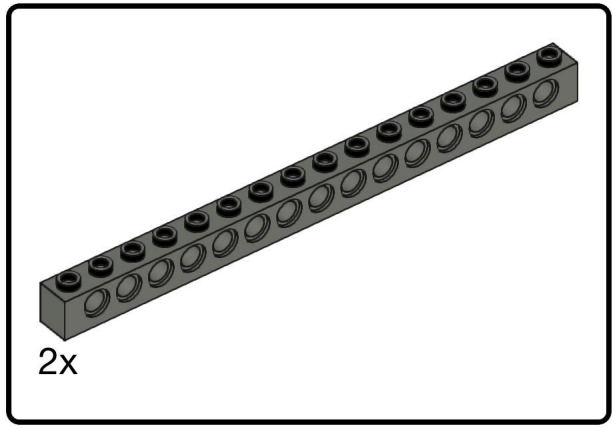

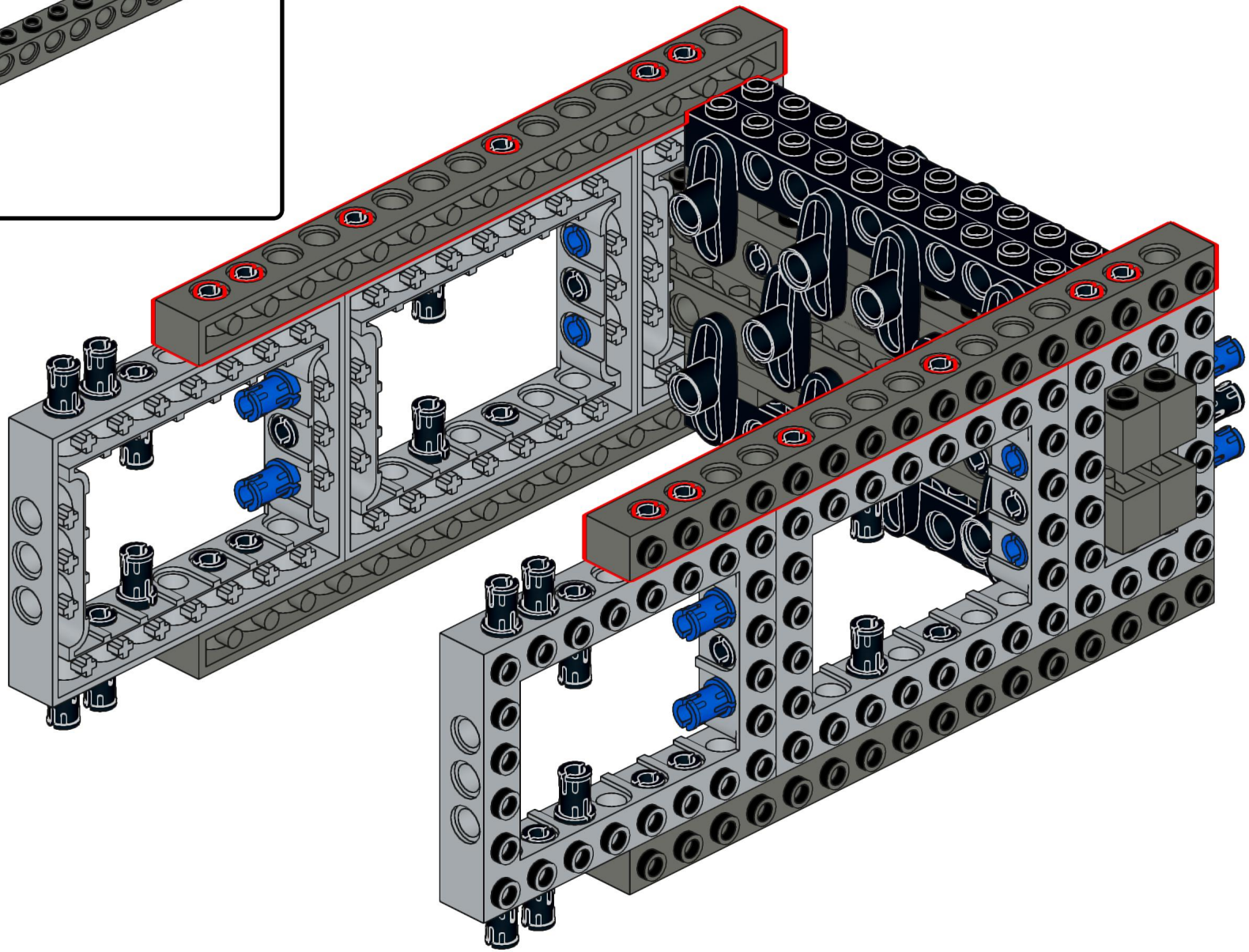

Designed by Michael Gertsch

24

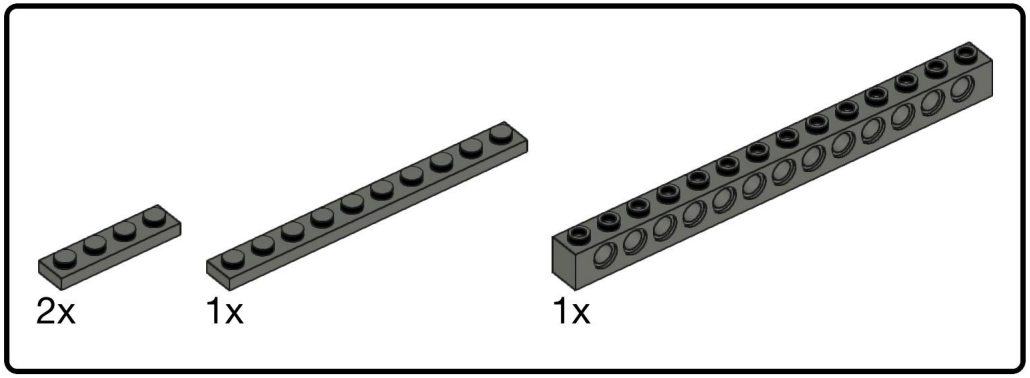

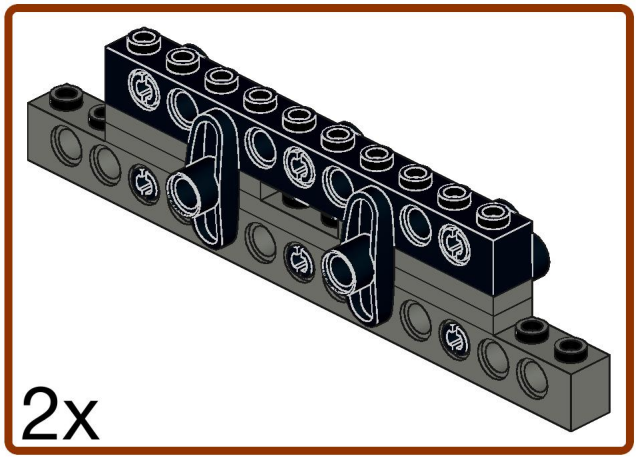

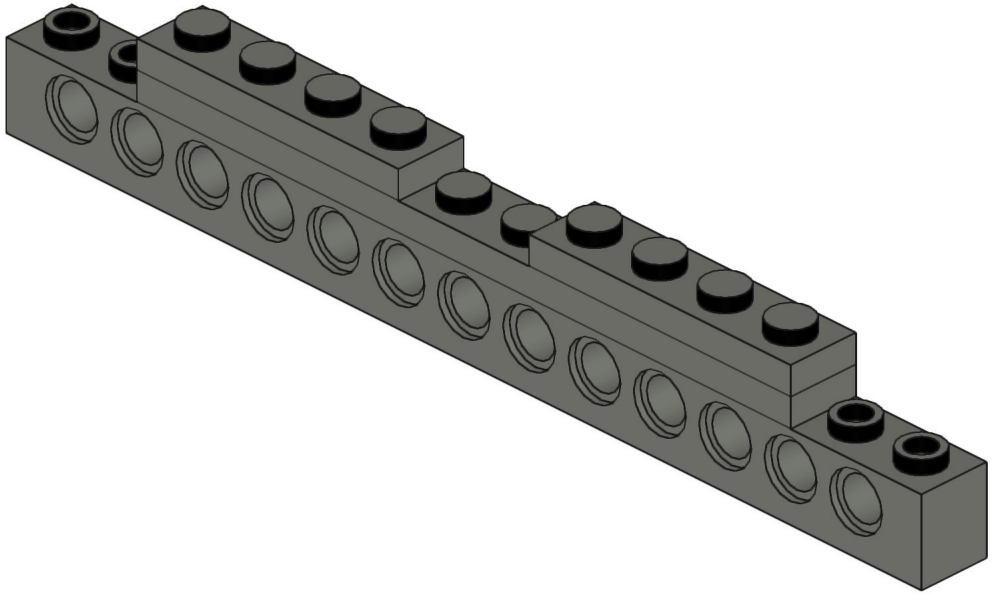

Designed by Michael Gertsch

25

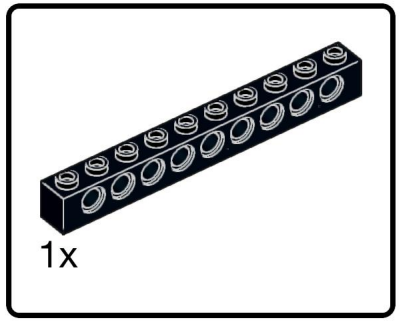

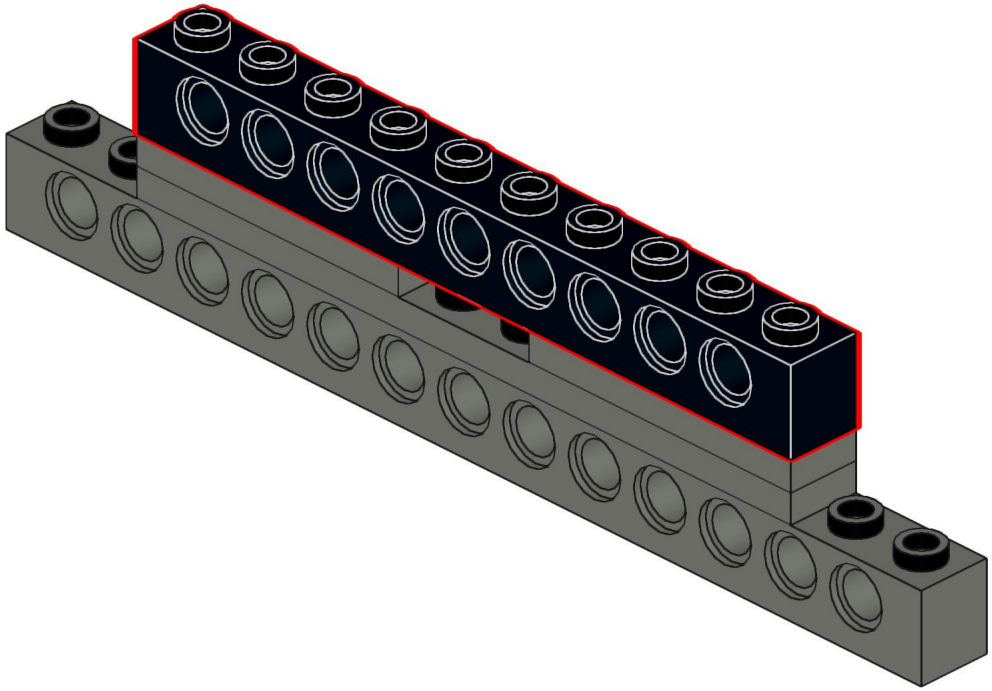

Designed by Michael Gertsch

26

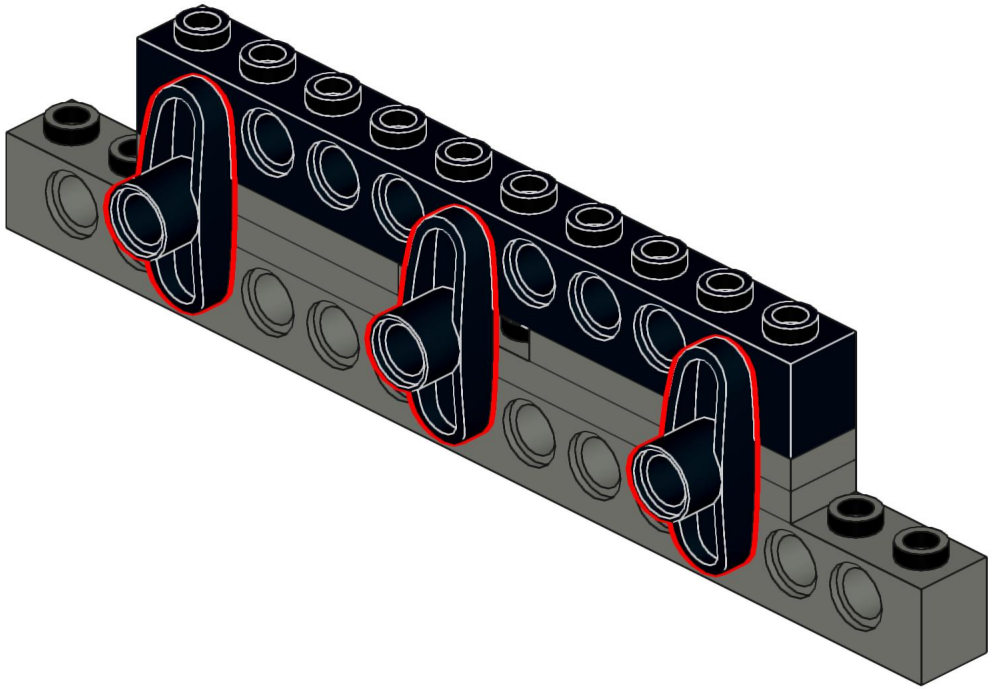

Designed by Michael Gertsch

27

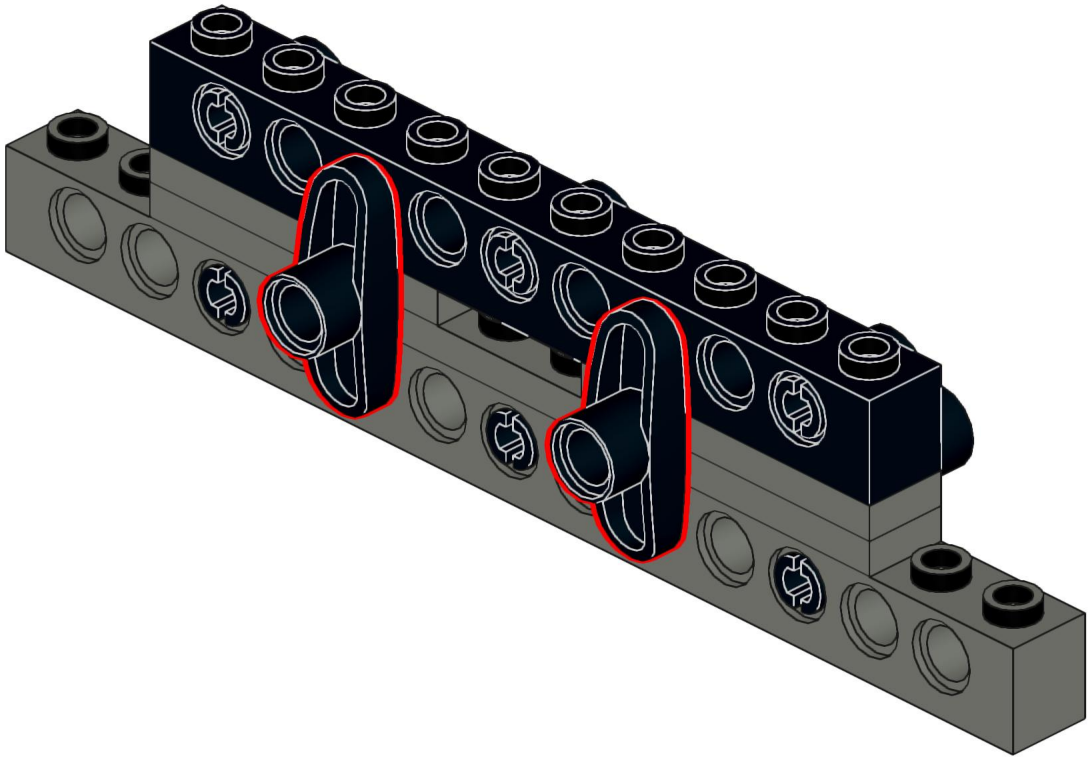

Designed by Michael Gertsch

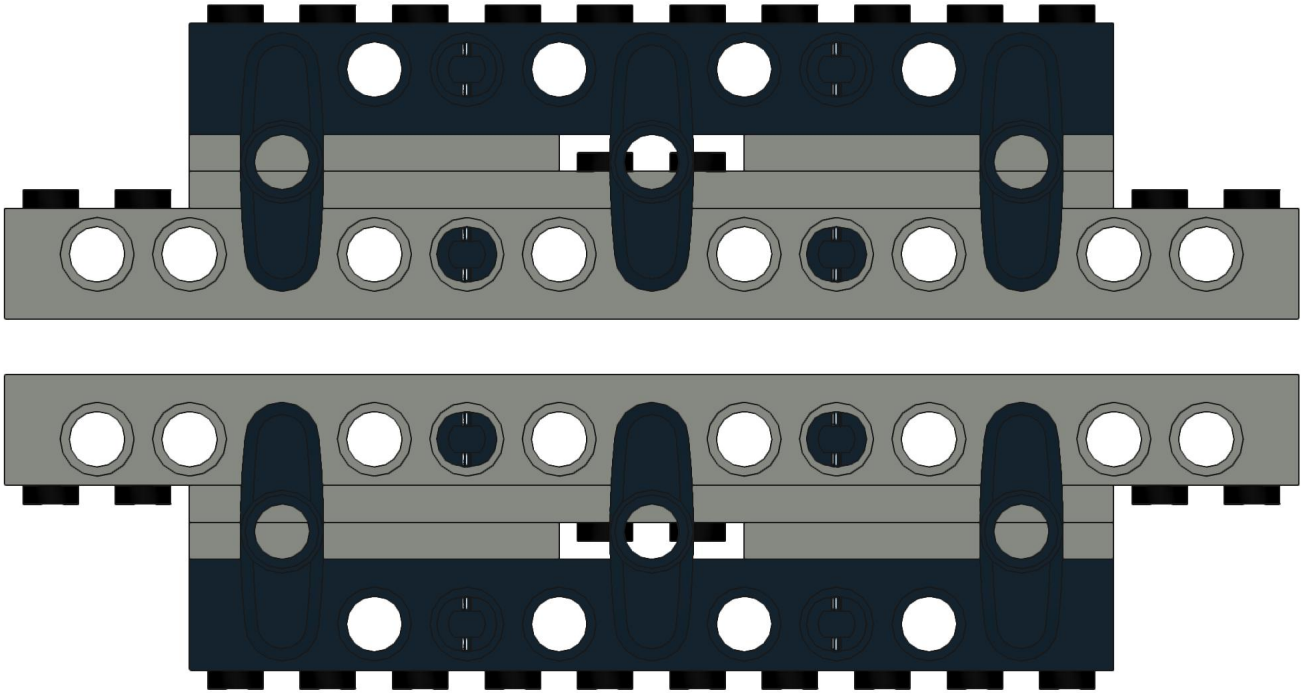

29

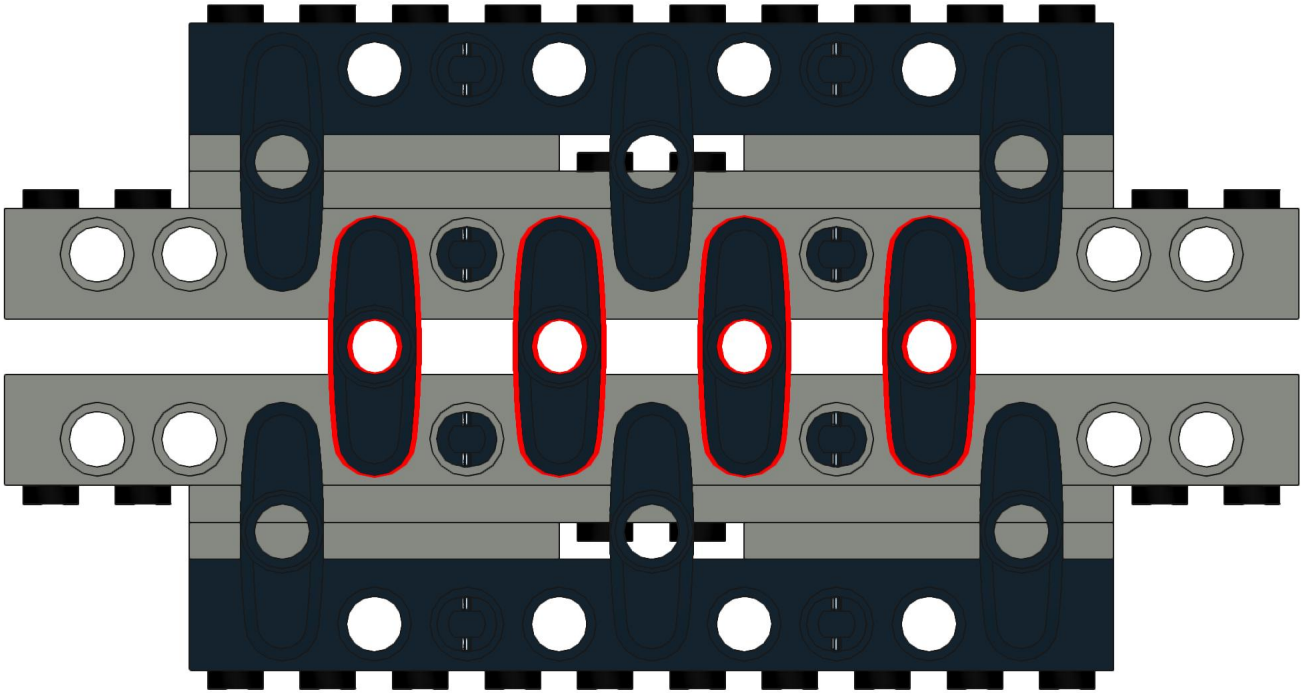

Designed by Michael Gertsch

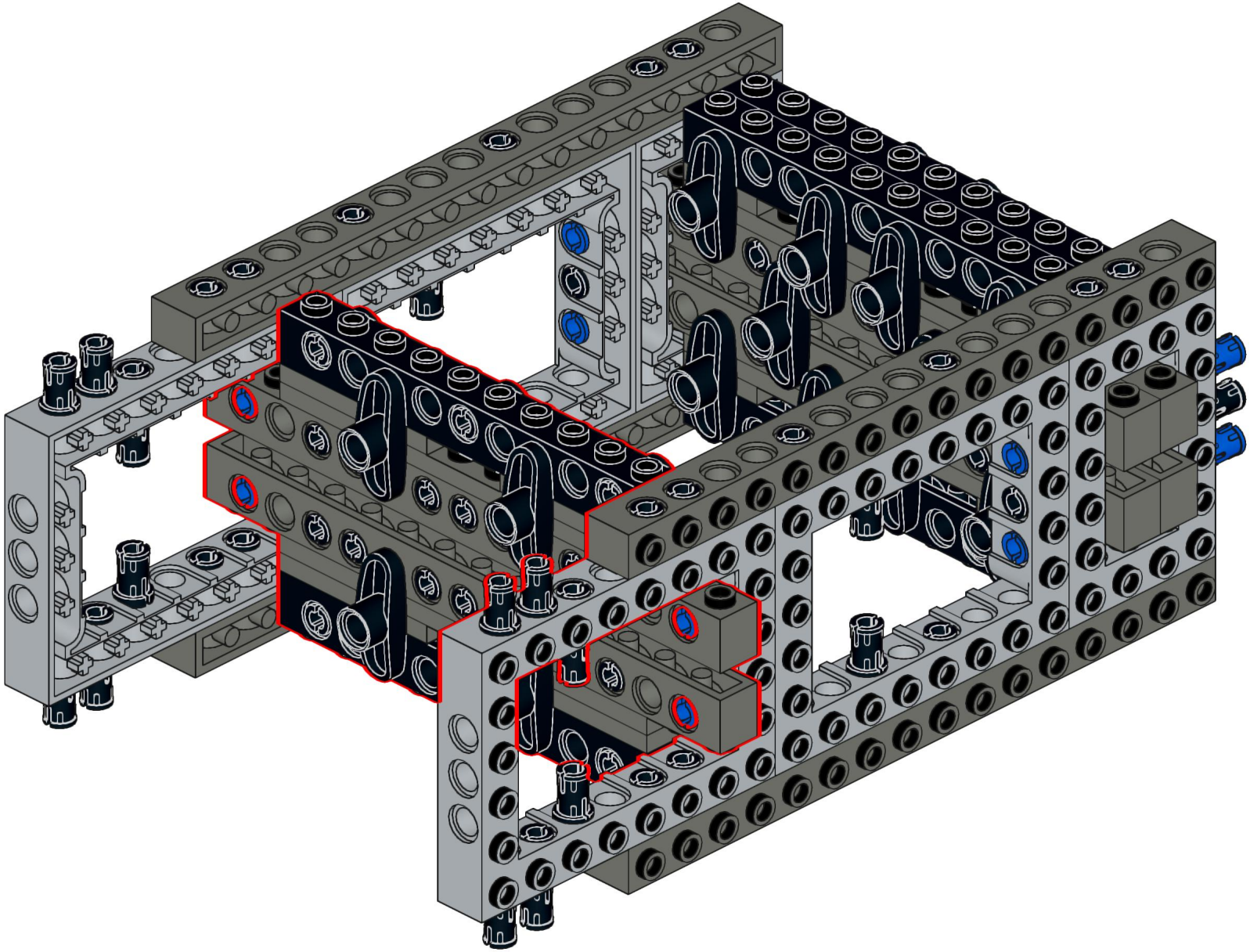

31

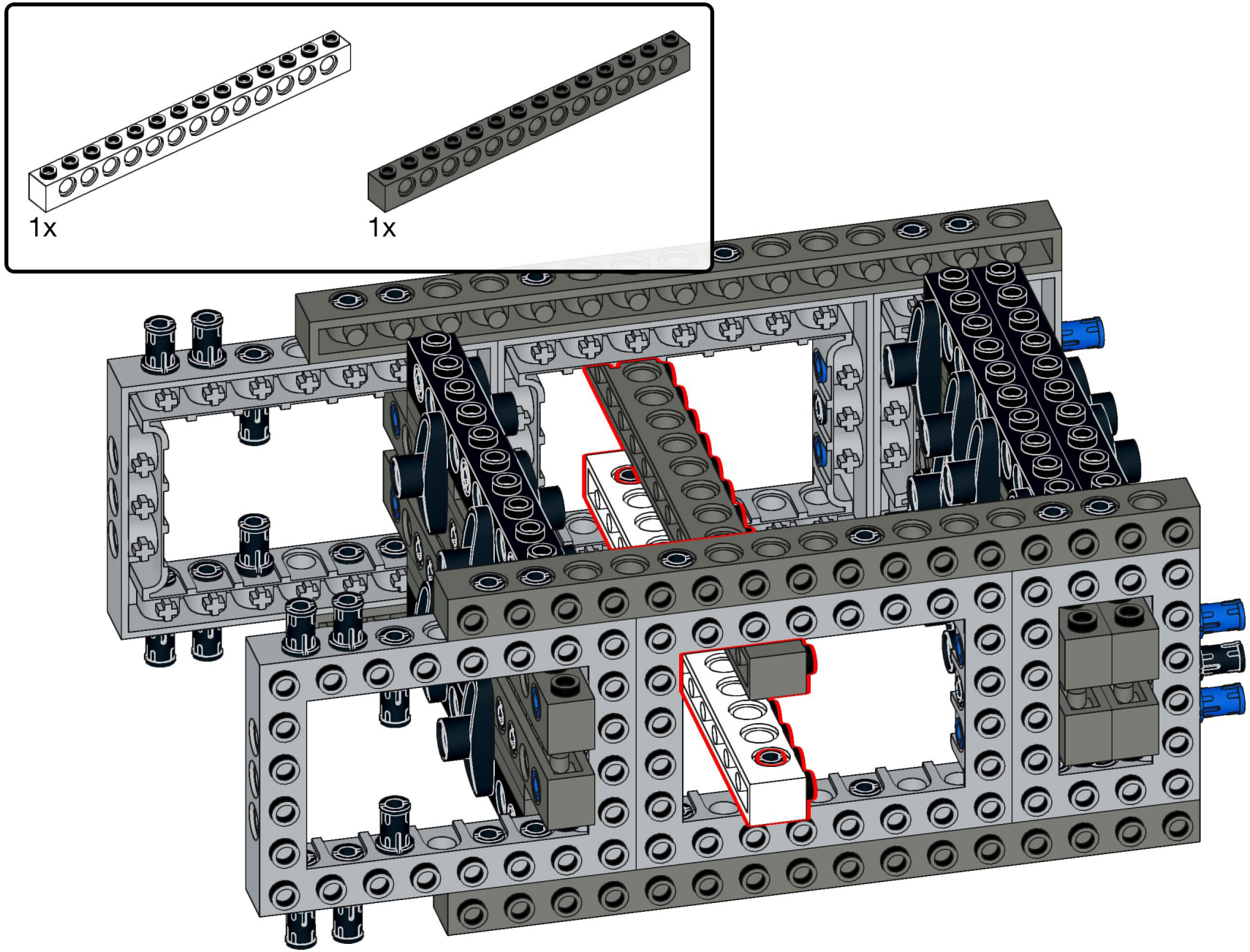

Designed by Michael Gertsch

32

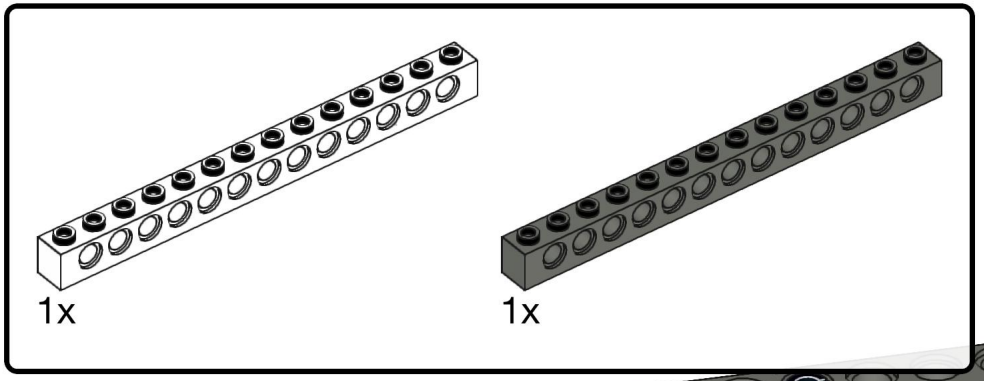

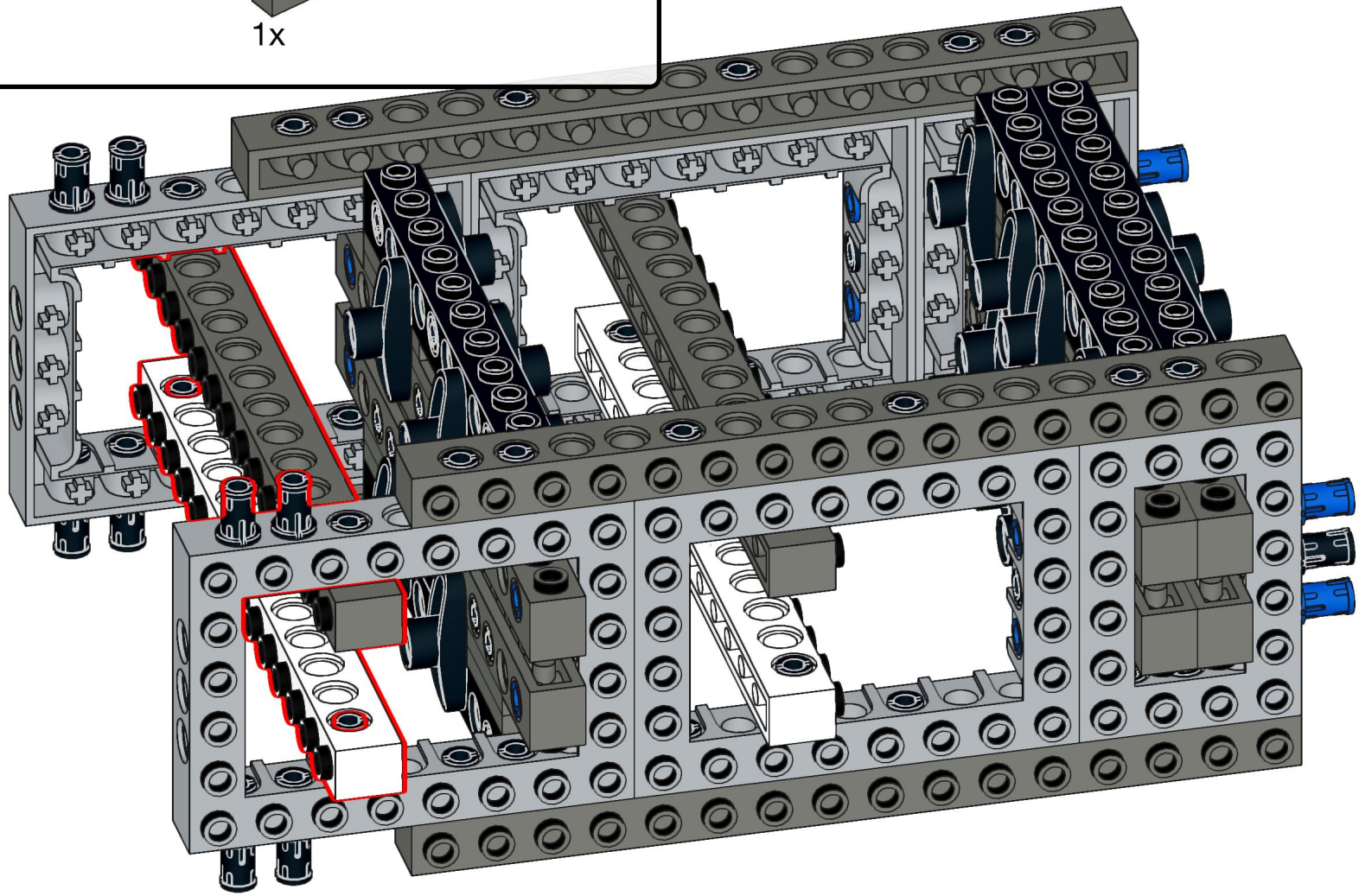

Designed by Michael Gertsch

33

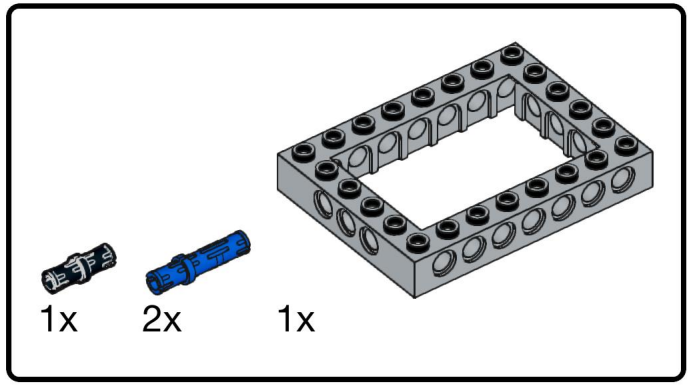

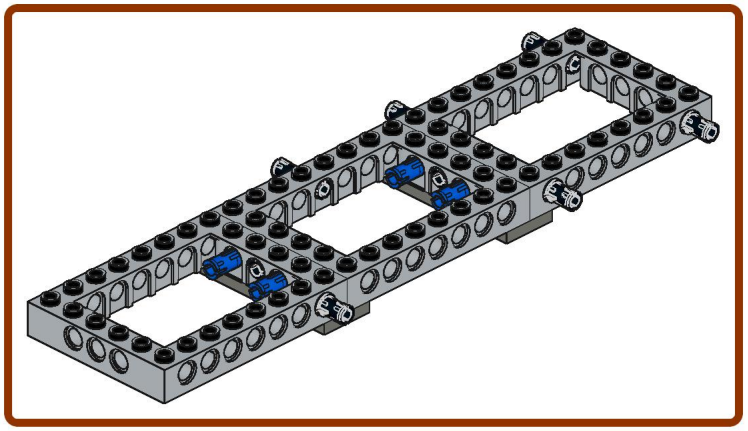

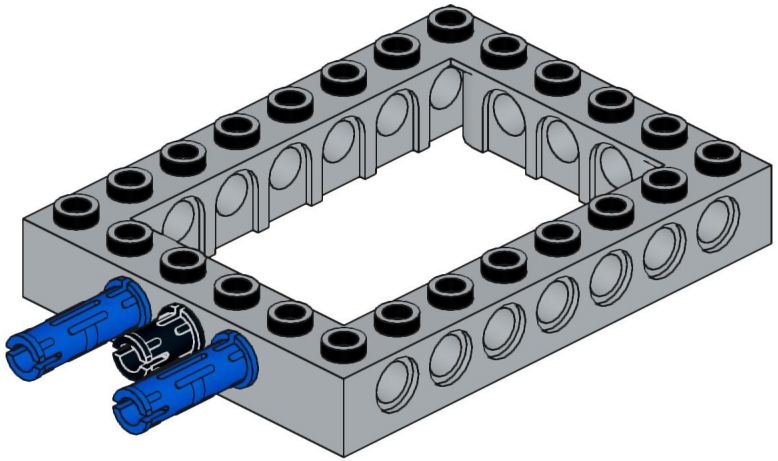

Designed by Michael Gertsch

34

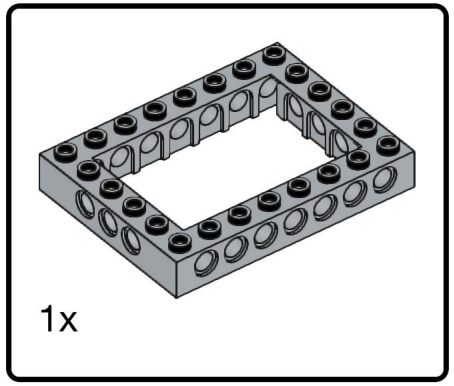

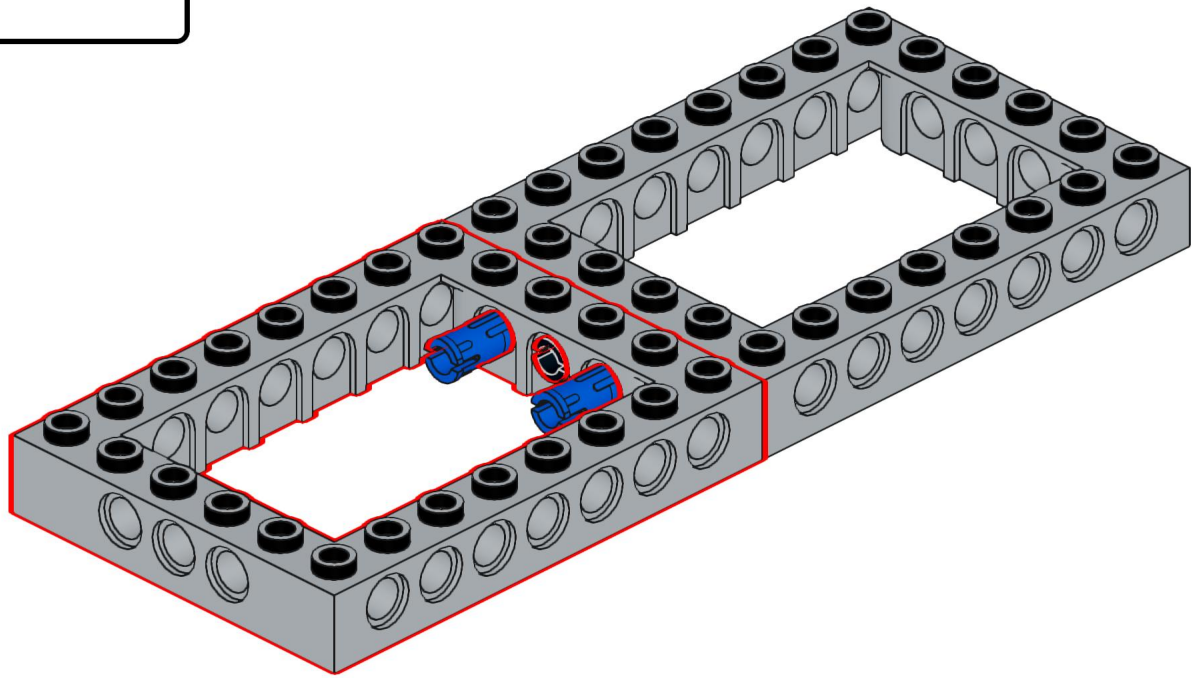

Designed by Michael Gertsch

35

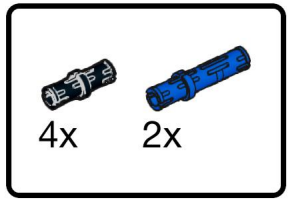

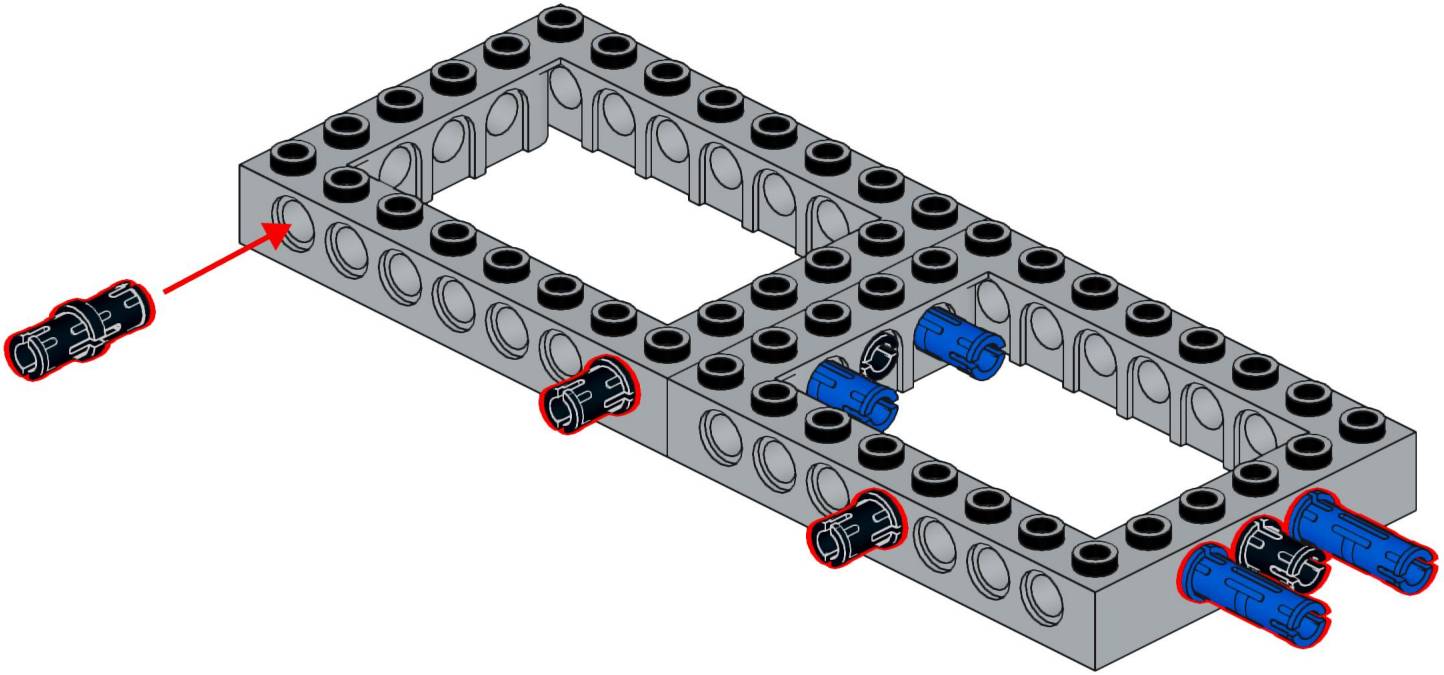

Designed by Michael Gertsch

36

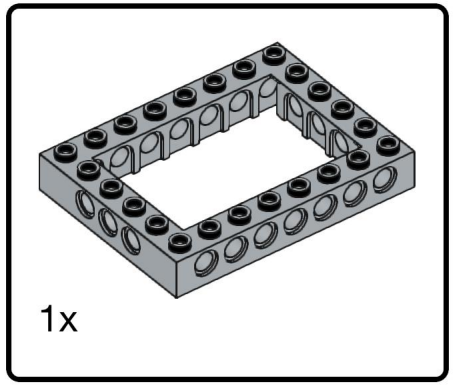

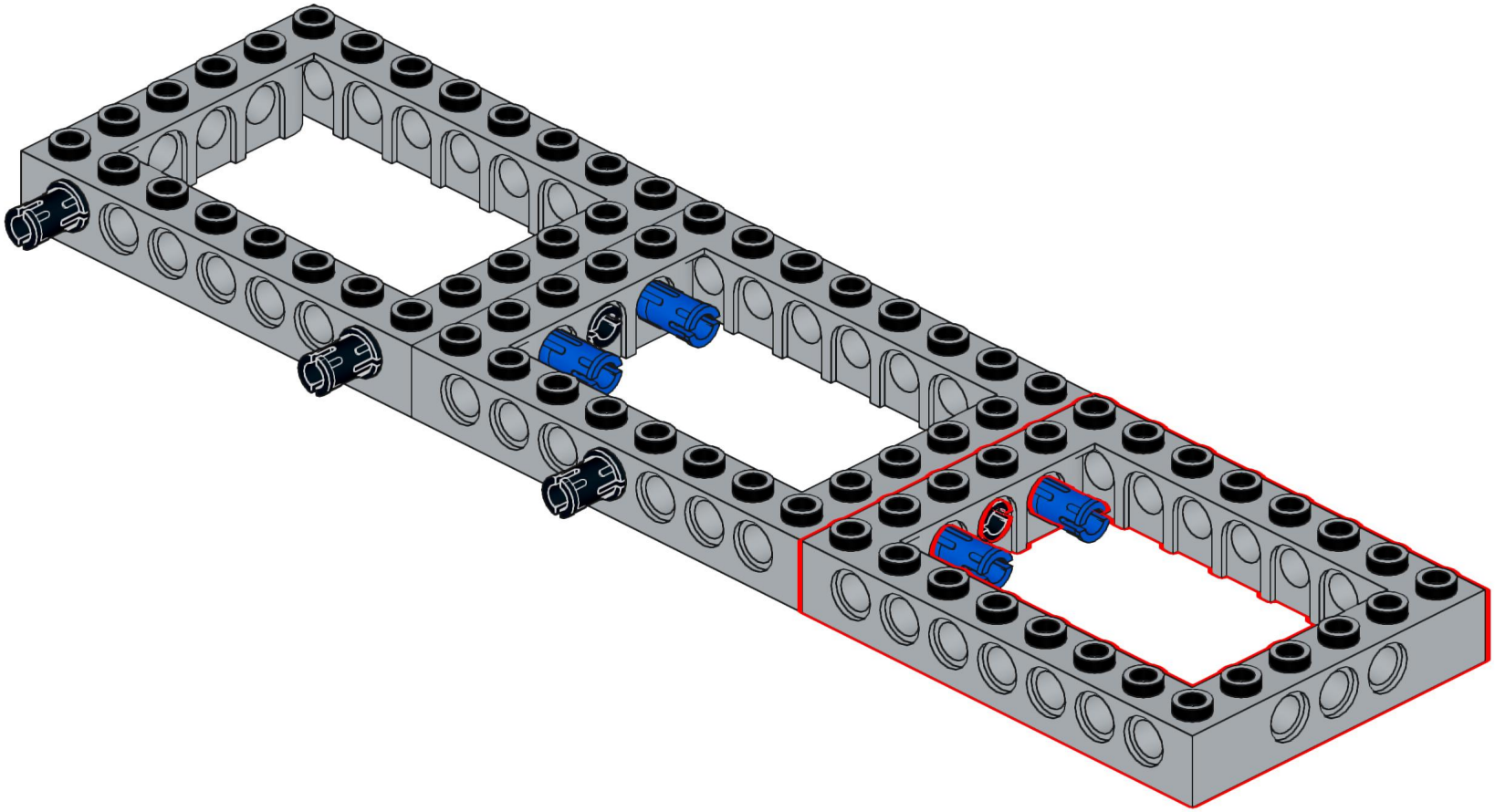

Designed by Michael Gertsch

37

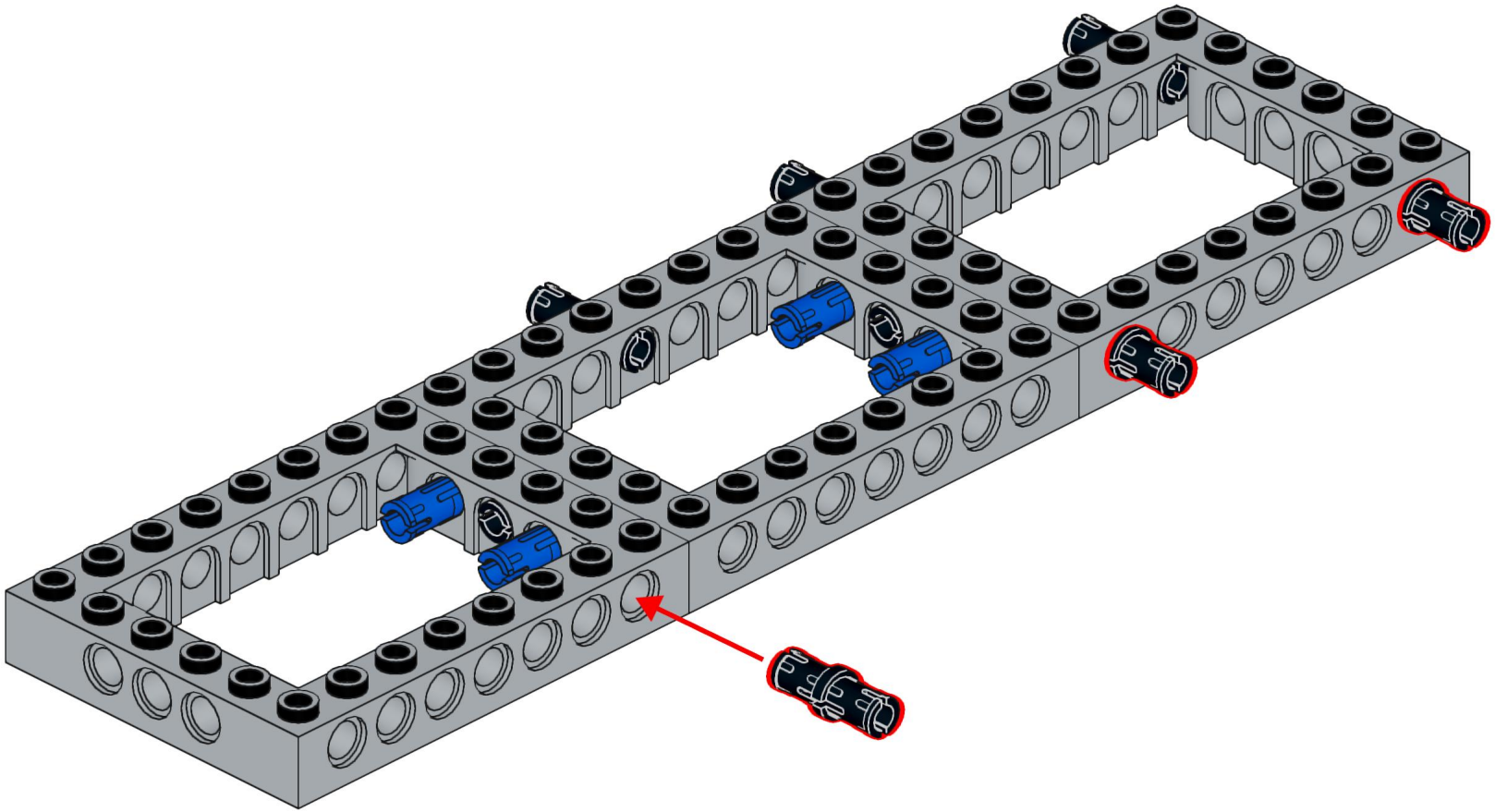

Designed by Michael Gertsch

38

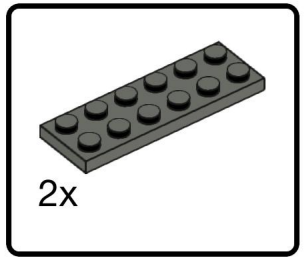

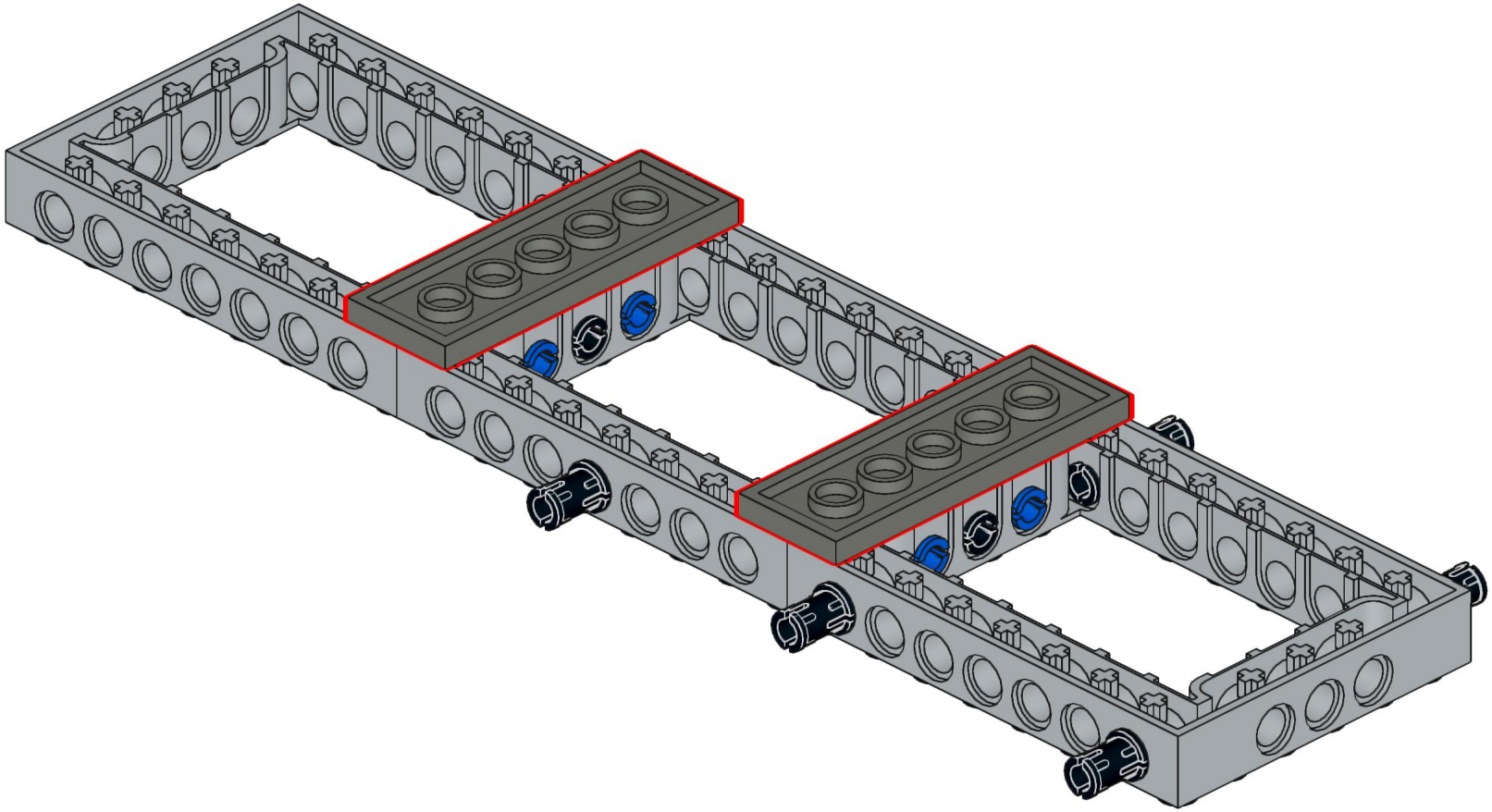

Designed by Michael Gertsch

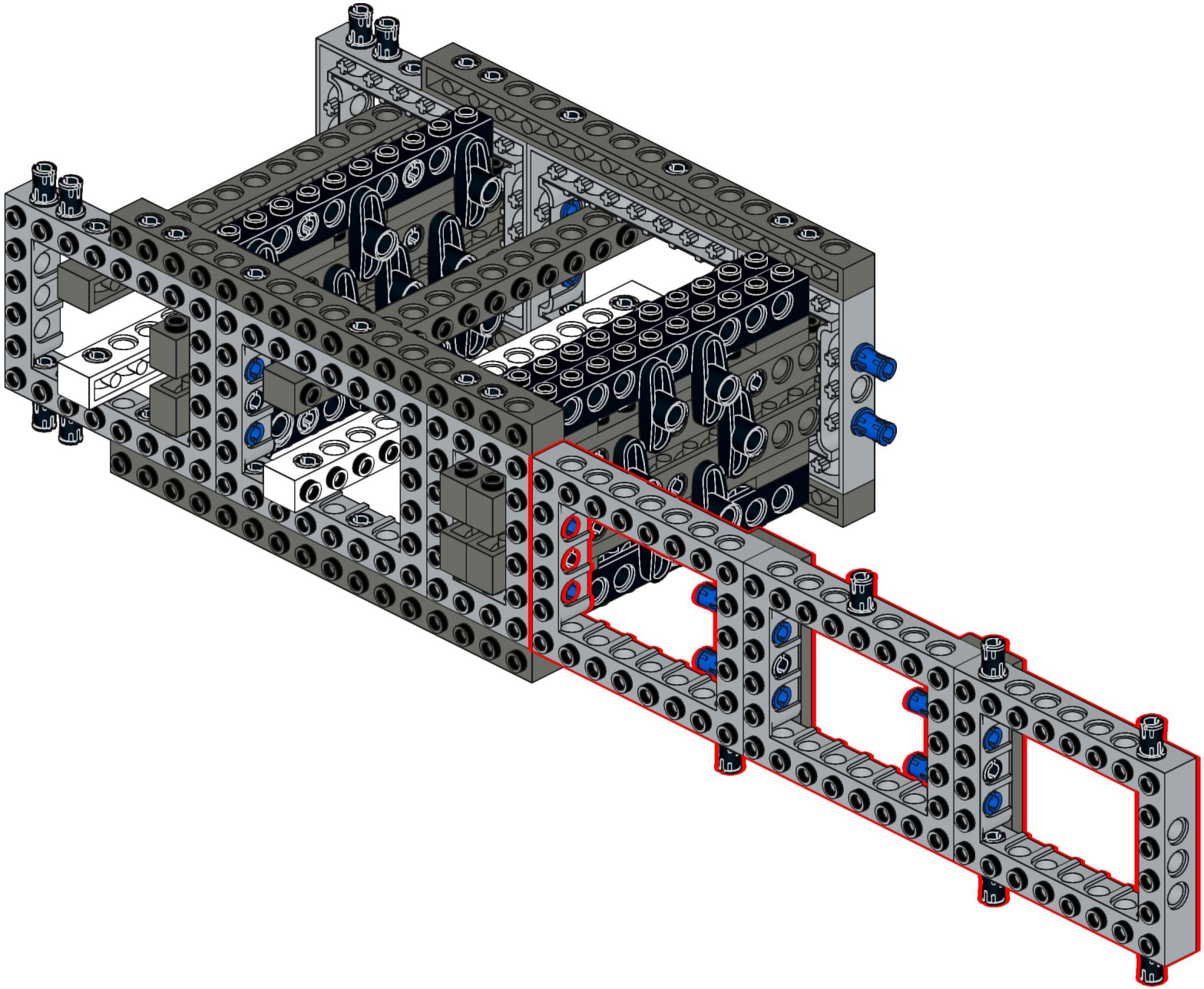

40

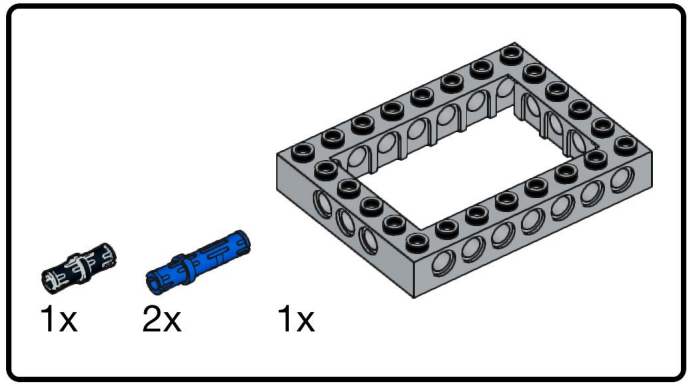

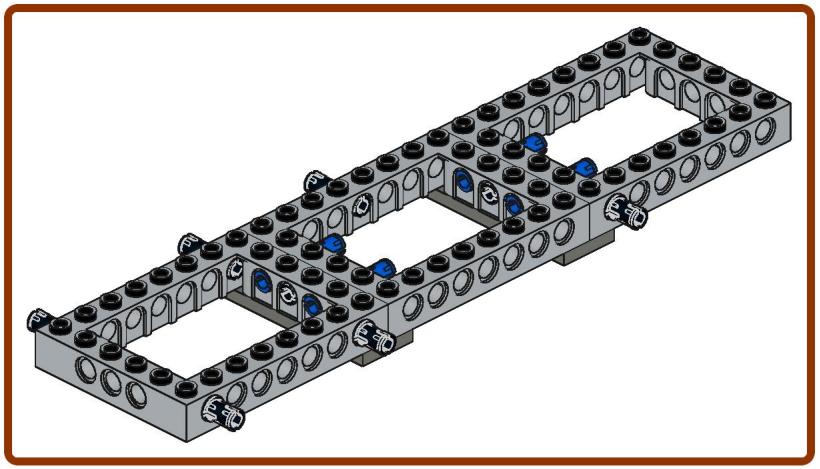

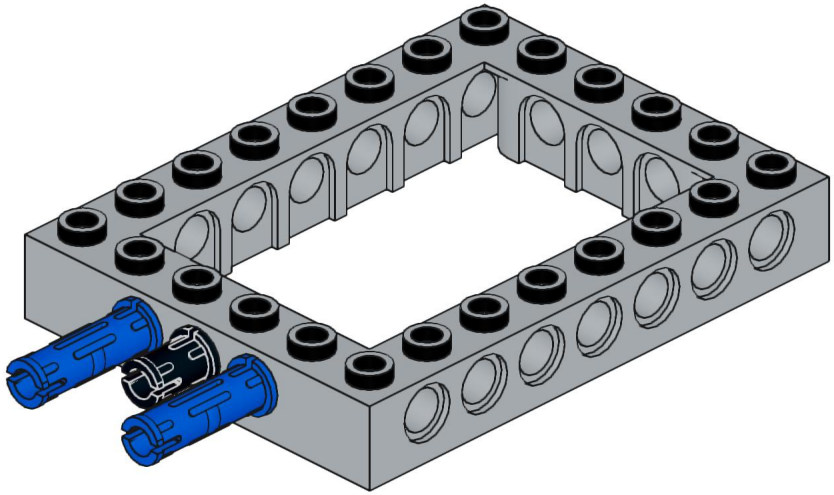

Designed by Michael Gertsch

41

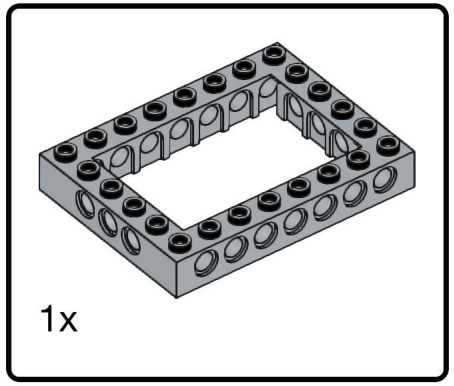

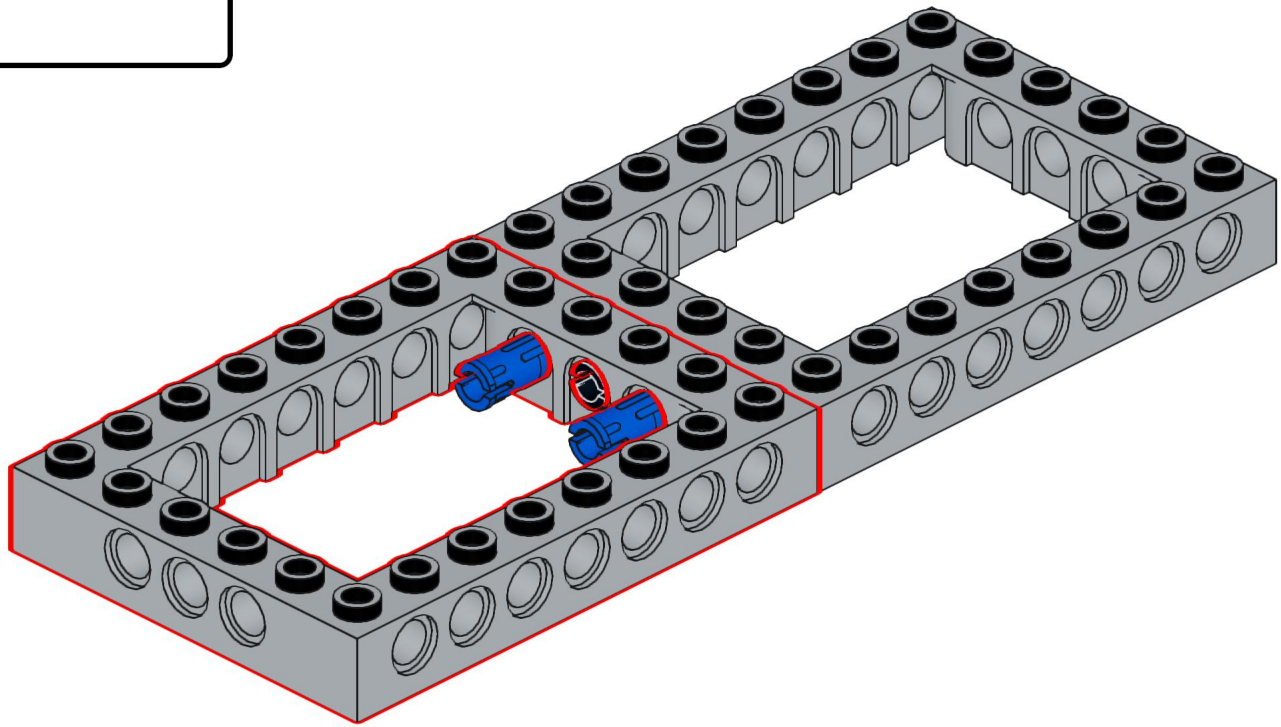

Designed by Michael Gertsch

42

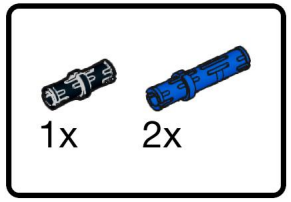

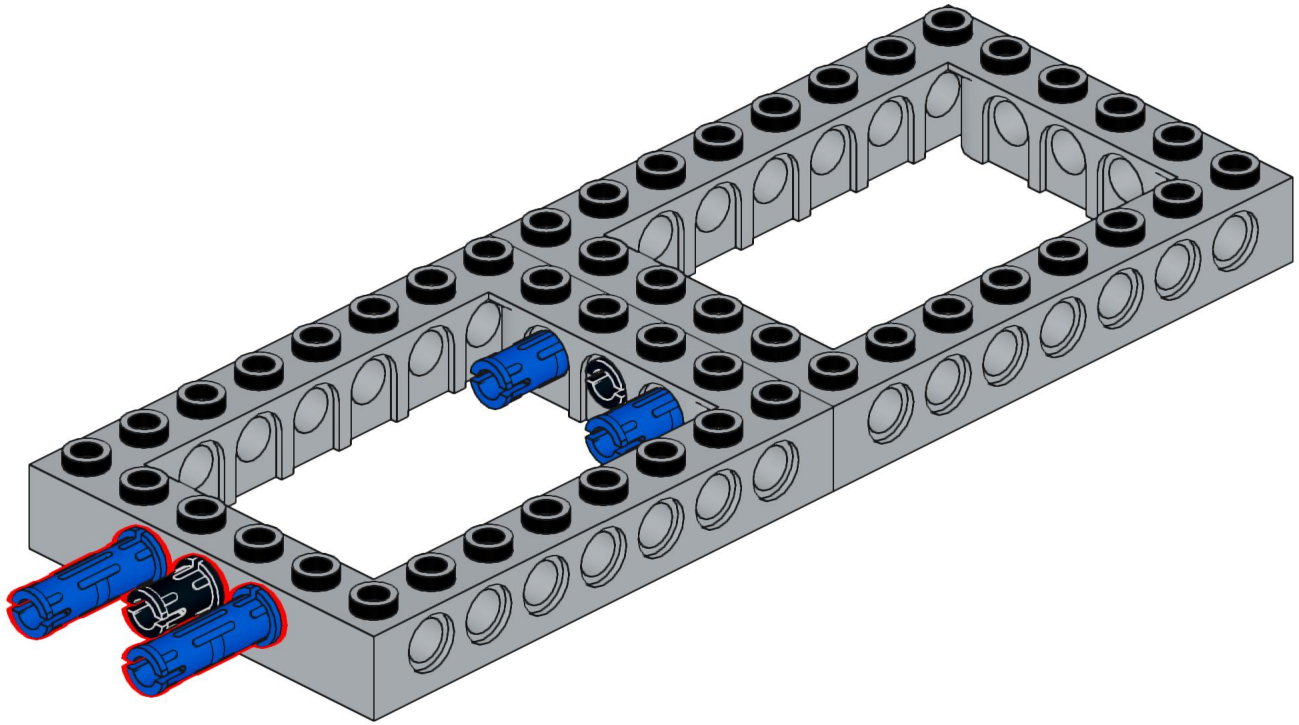

Designed by Michael Gertsch

43

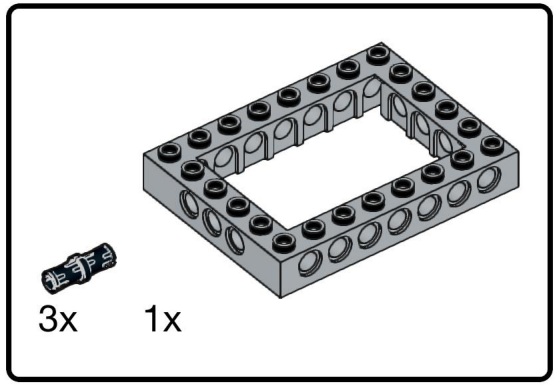

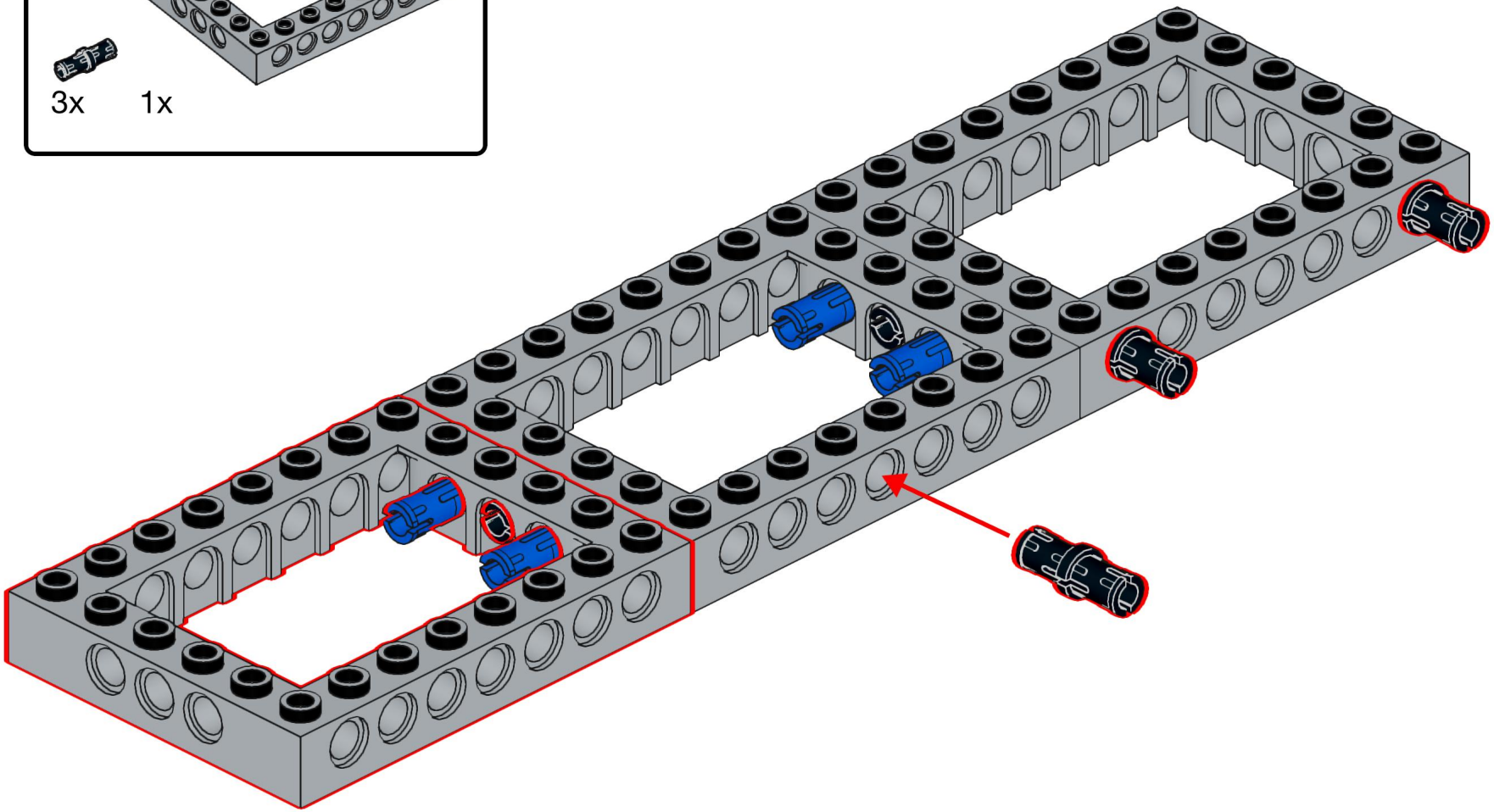

Designed by Michael Gertsch

44

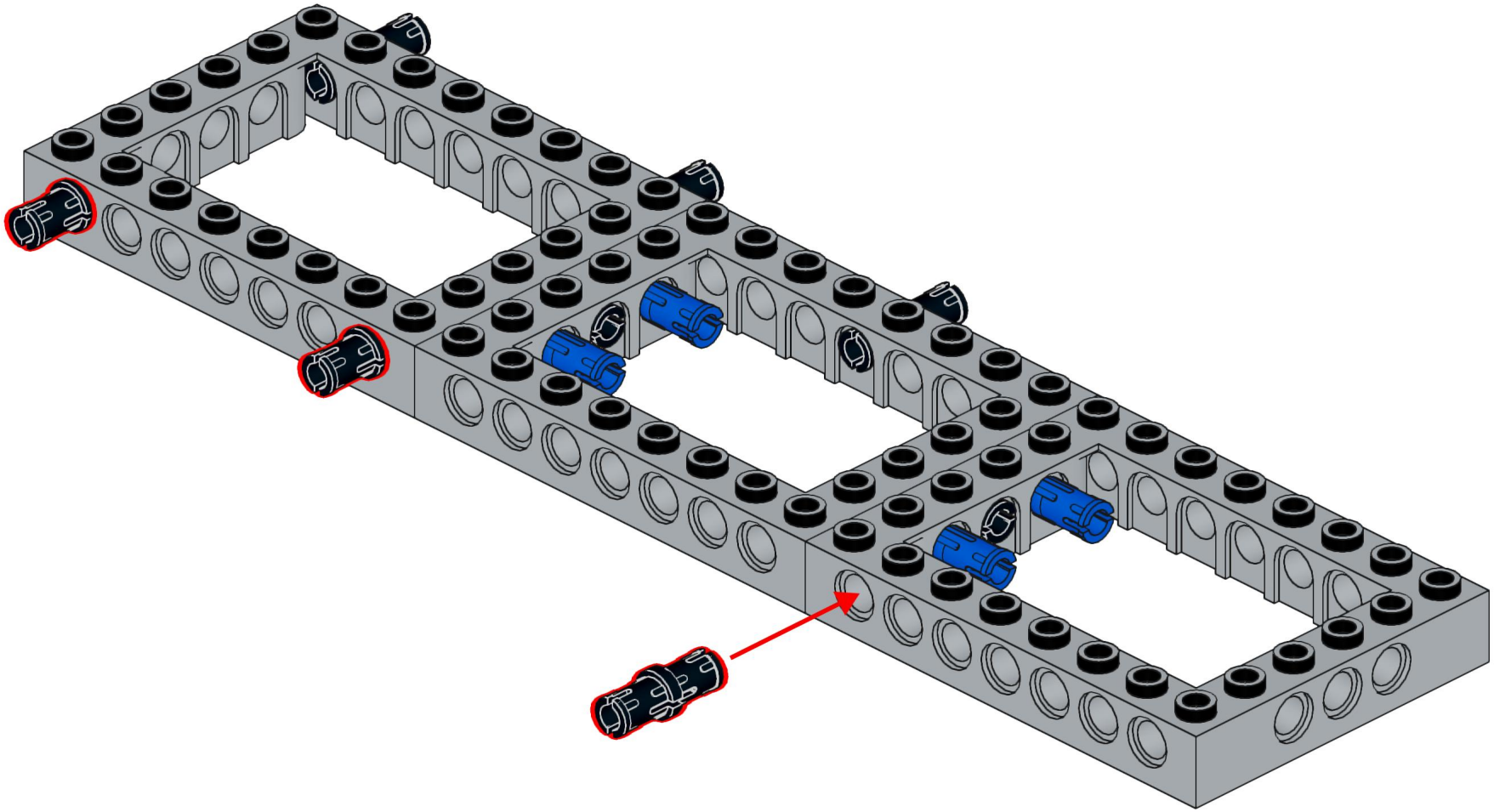

Designed by Michael Gertsch

45

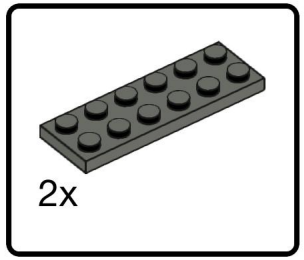

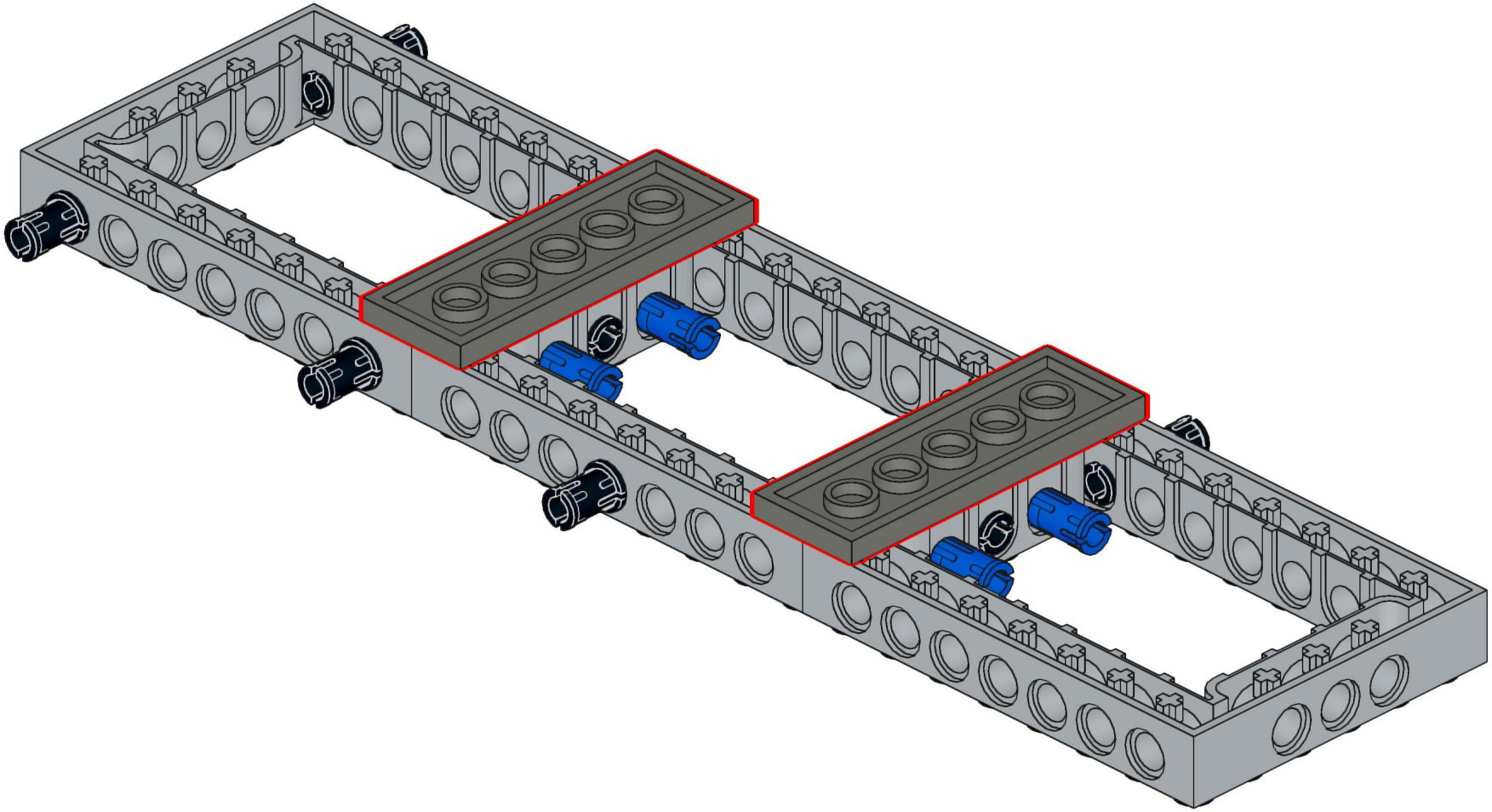

Designed by Michael Gertsch

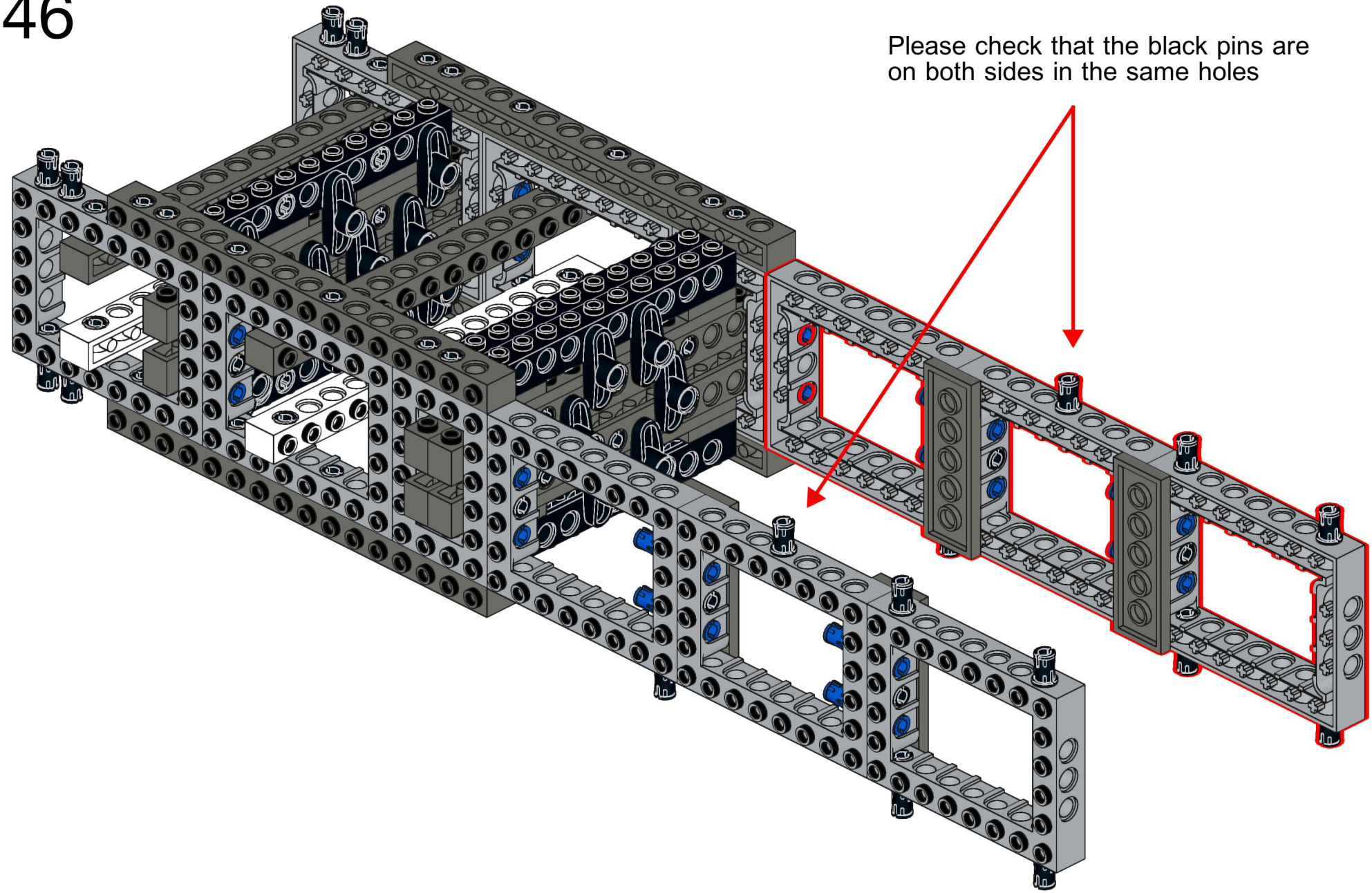
Please check that the black pins are
on both sides in the same holes

47

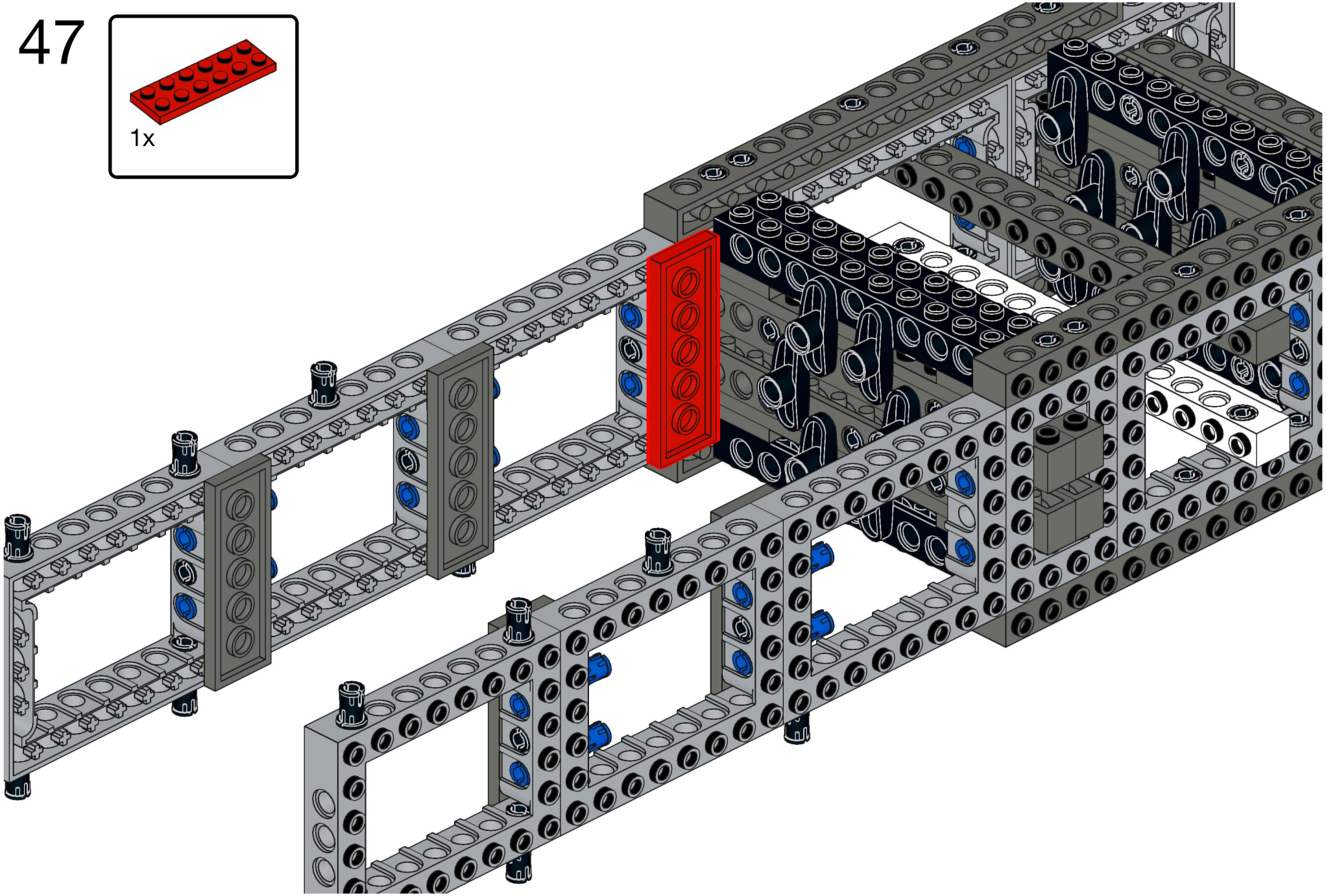

Designed by Michael Gertsch

48

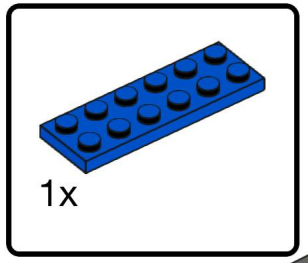

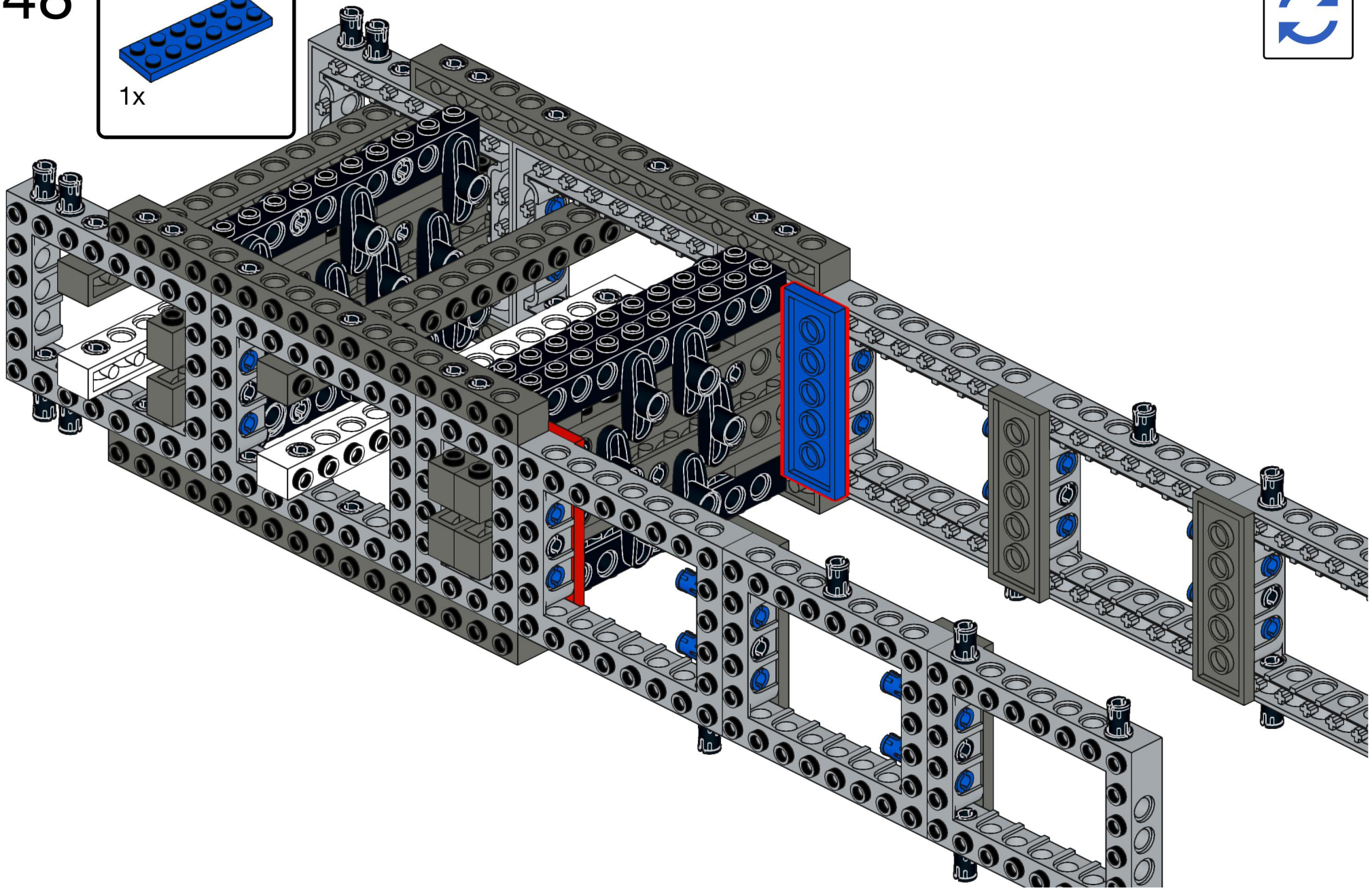

Designed by Michael Gertsch

49

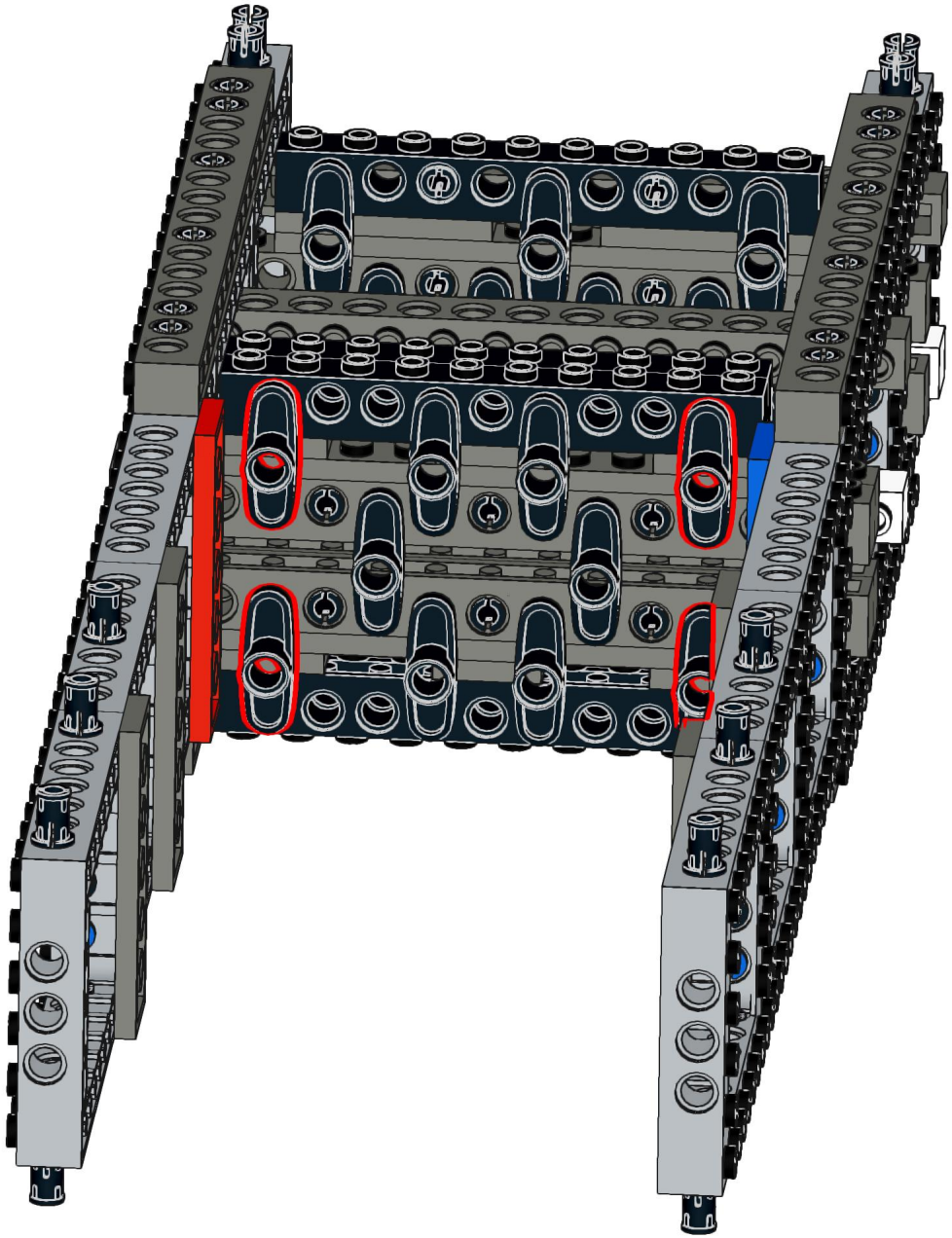

50

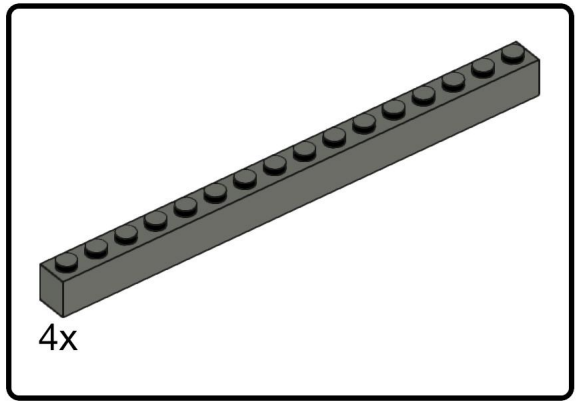

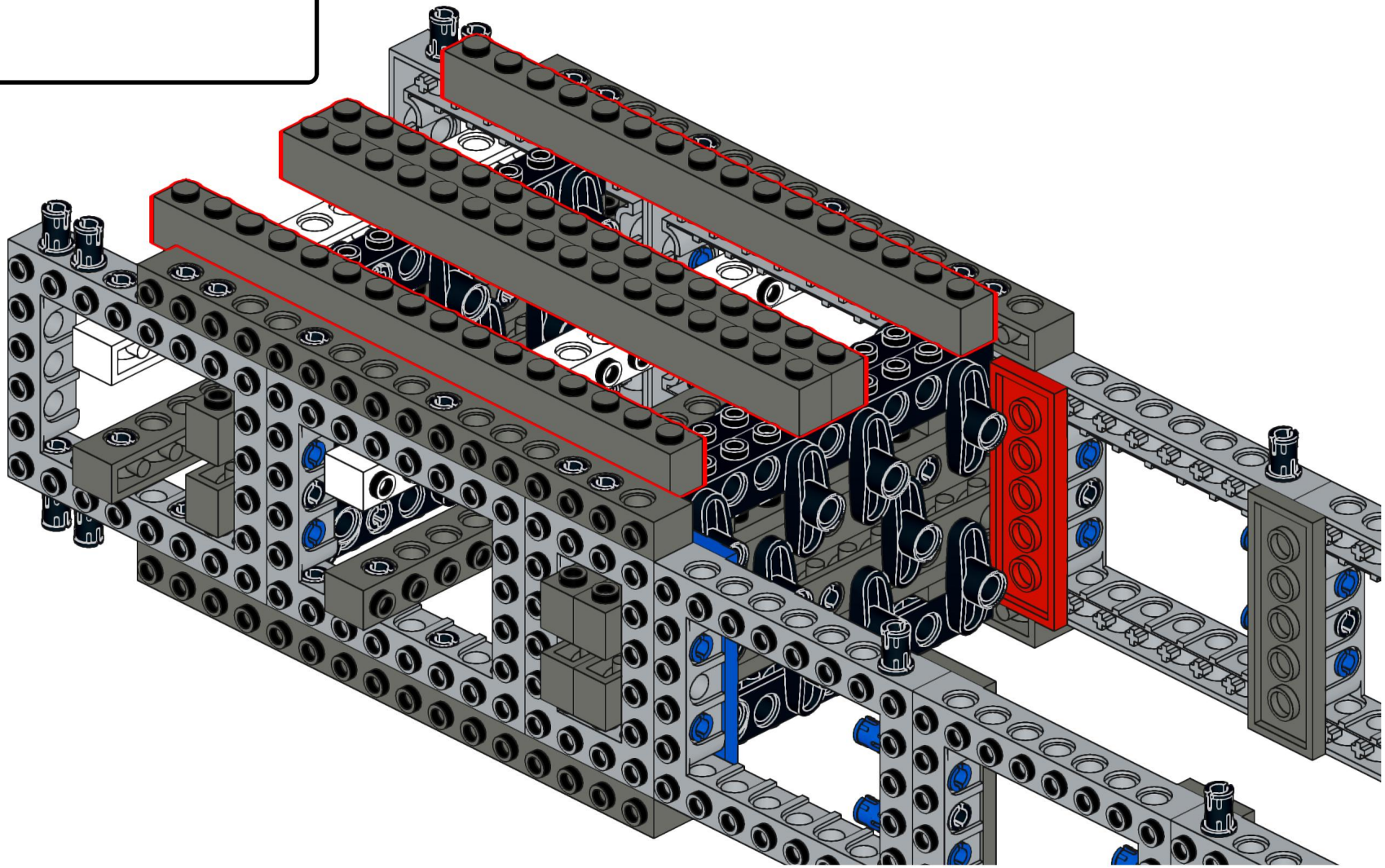

Designed by Michael Gertsch

51

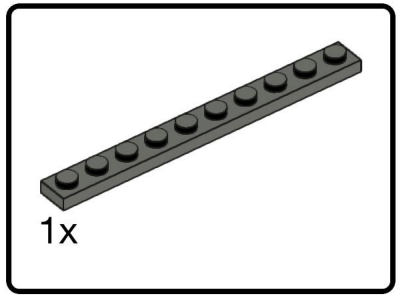

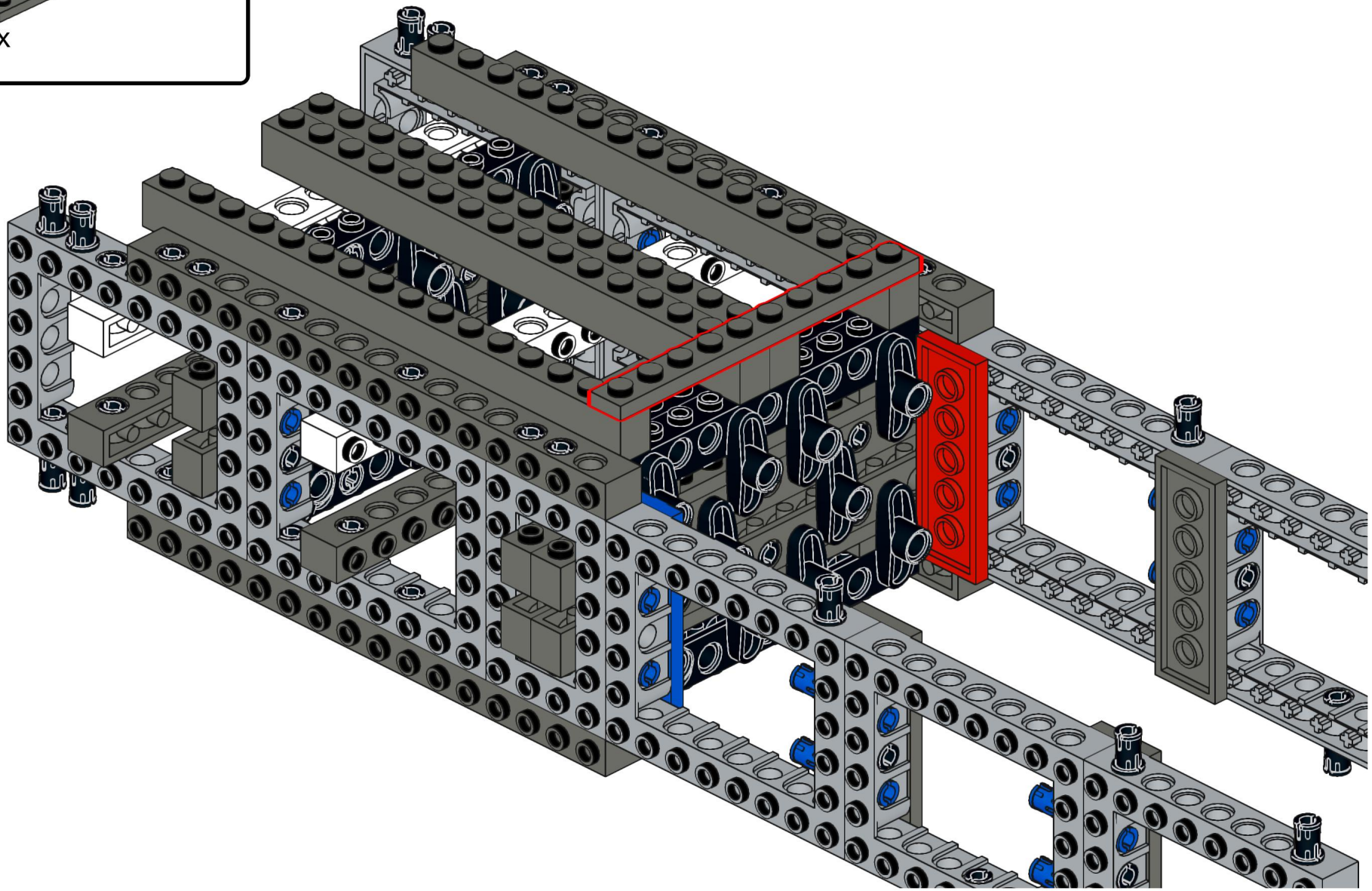

Designed by Michael Gertsch

52

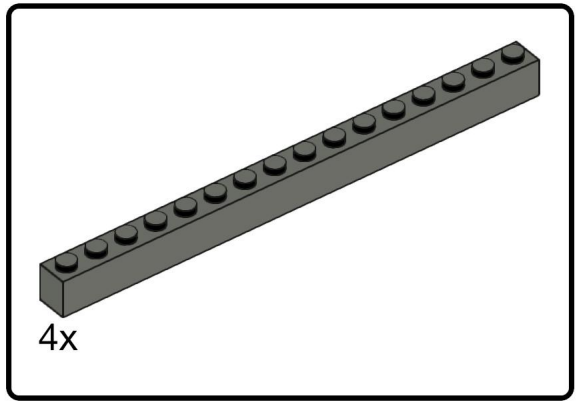

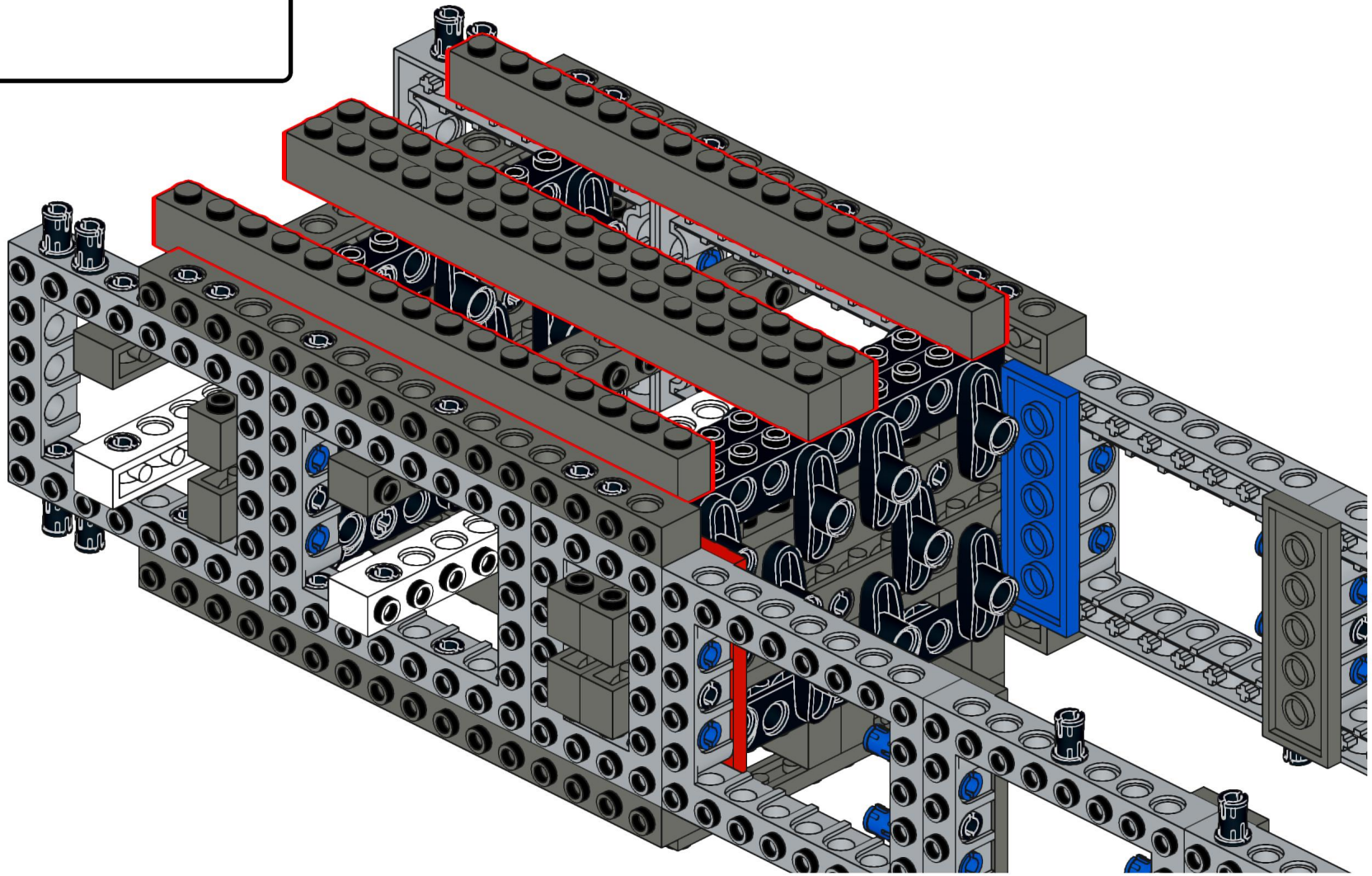

Designed by Michael Gertsch

53

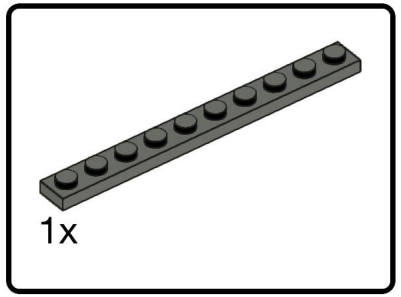

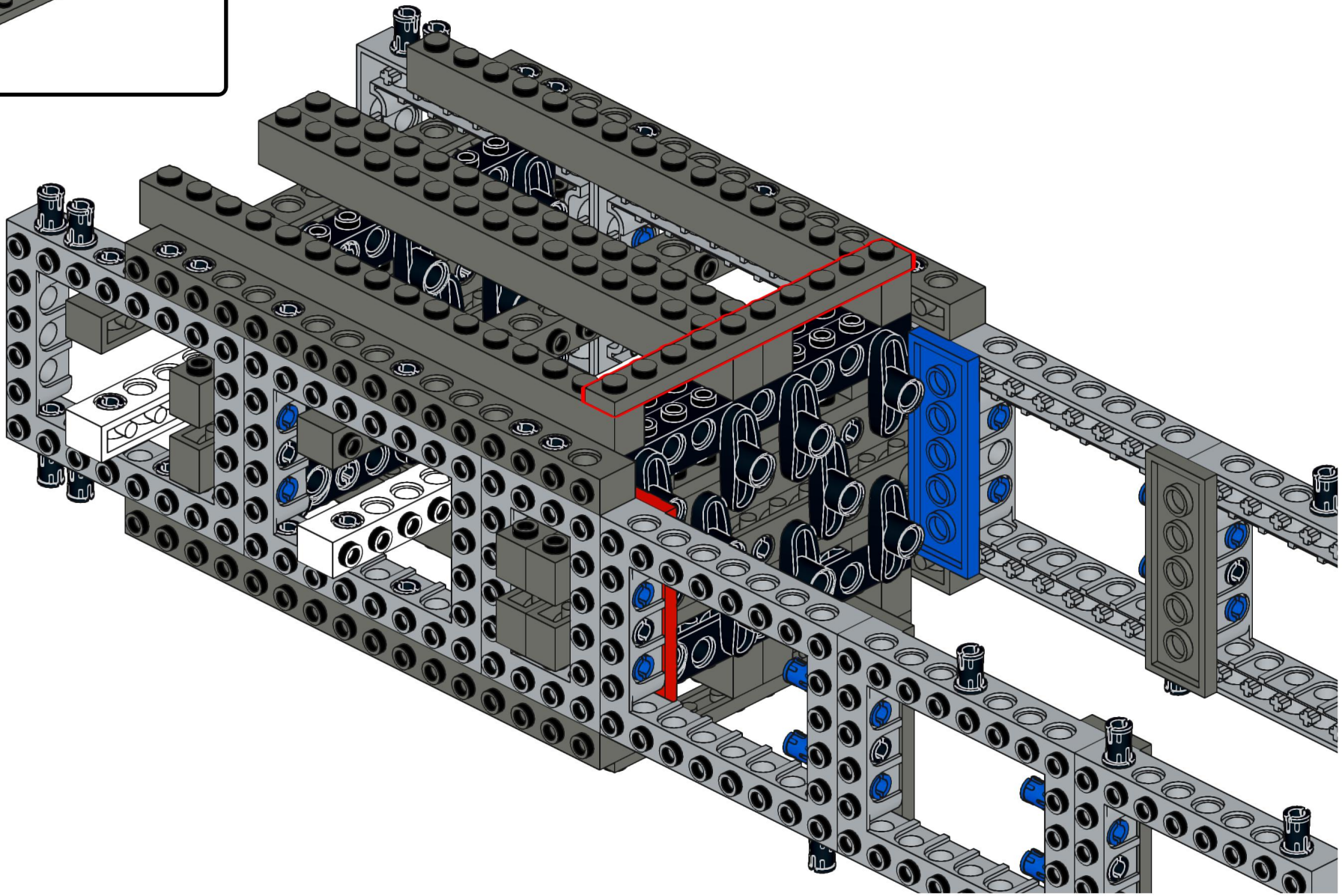

Designed by Michael Gertsch

54

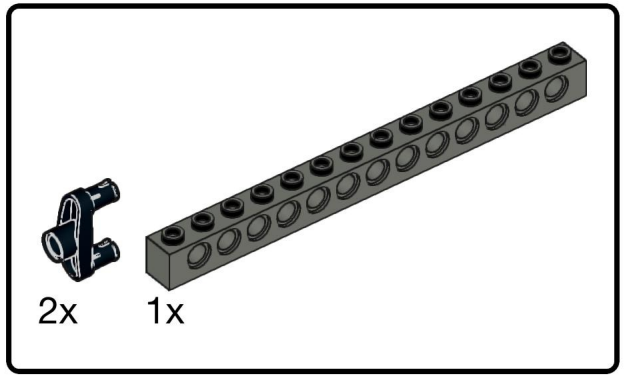

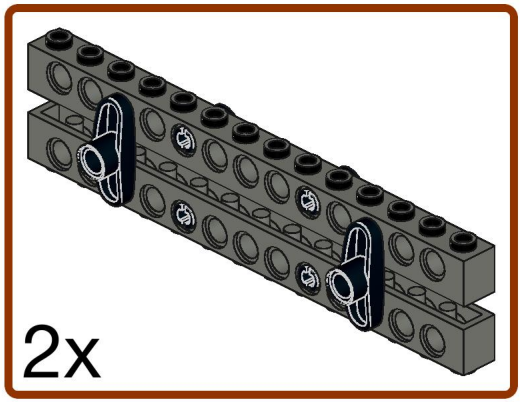

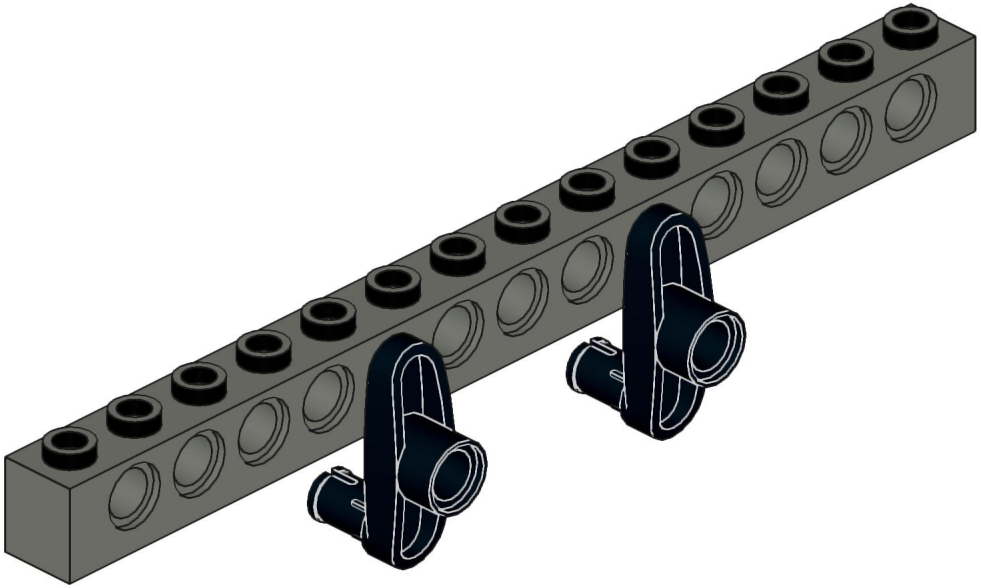

55

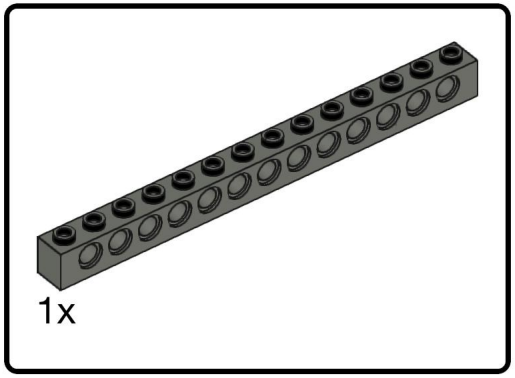

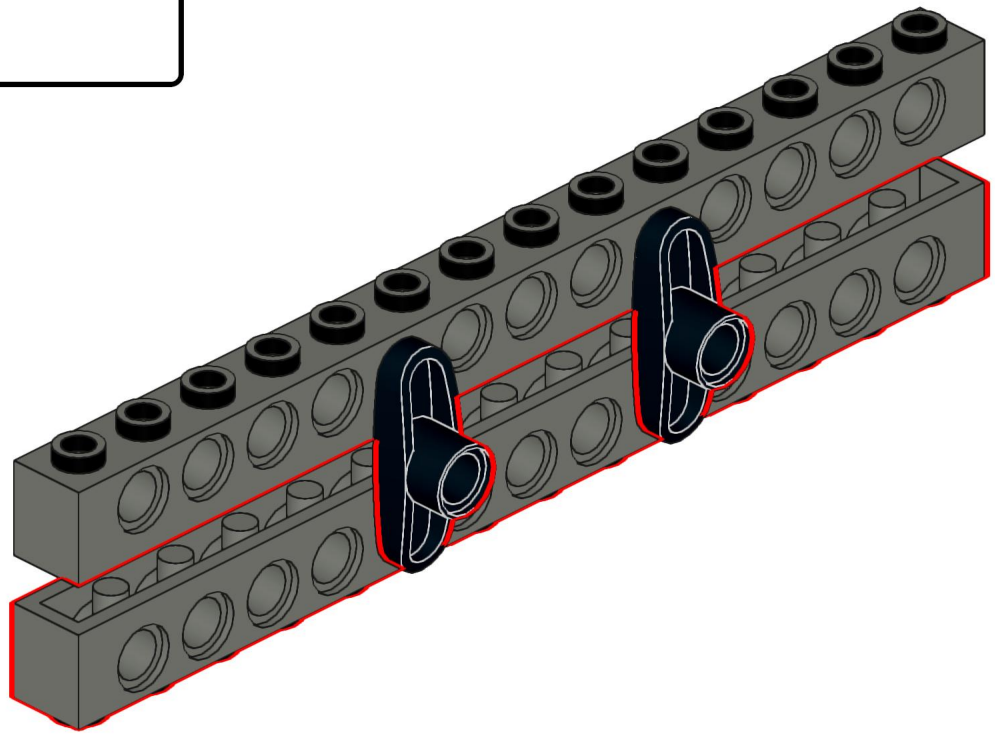

Designed by Michael Gertsch

56

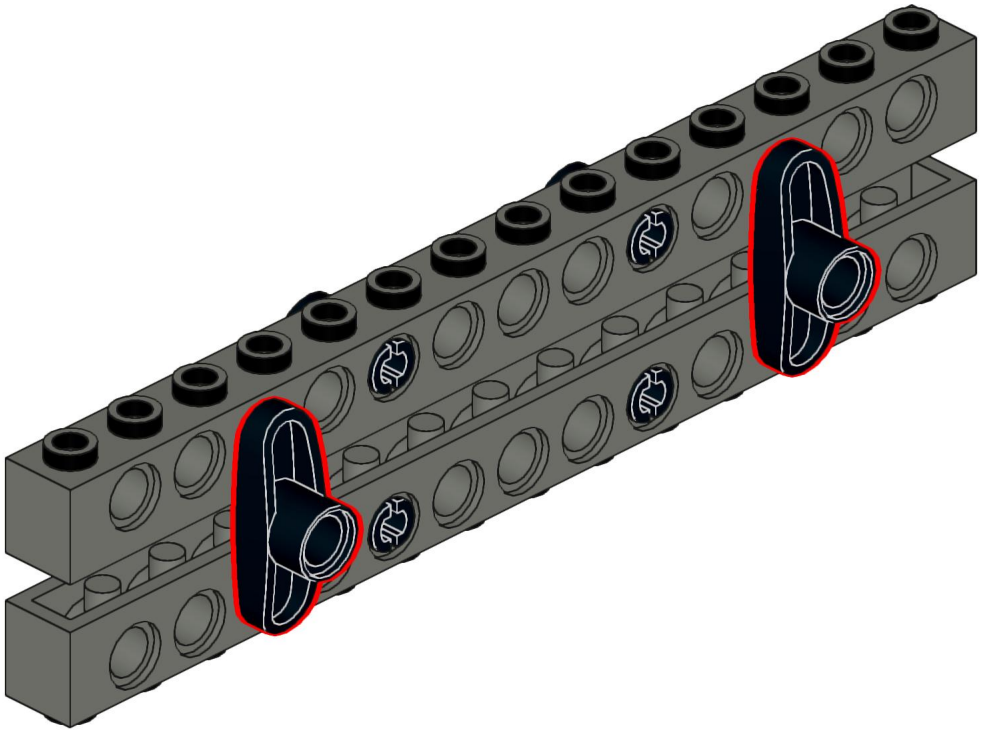

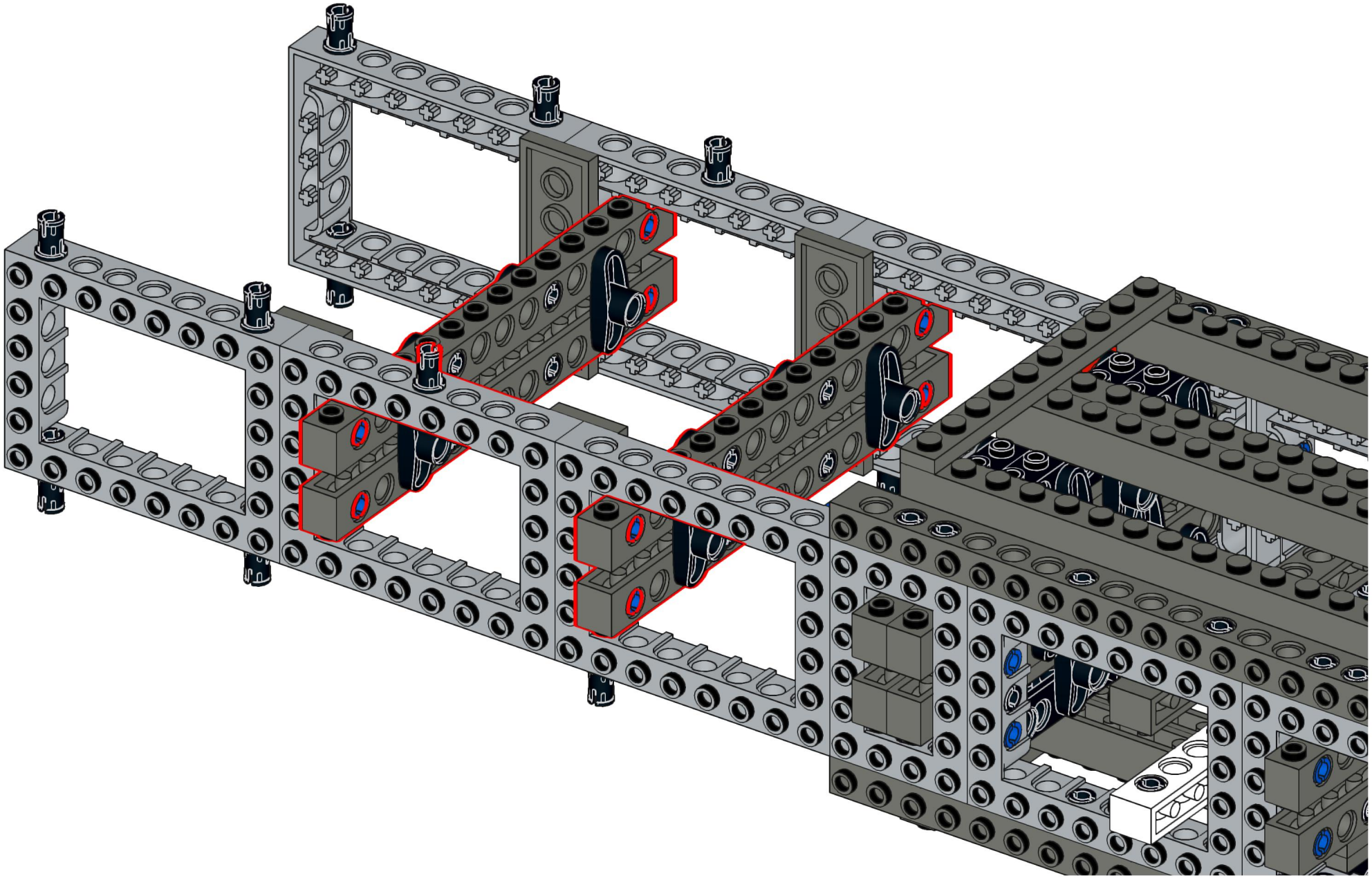

58

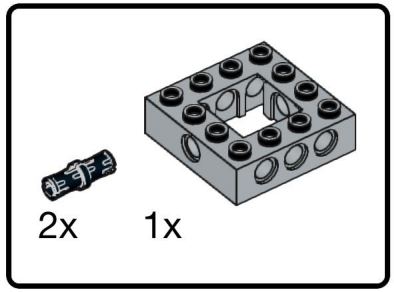

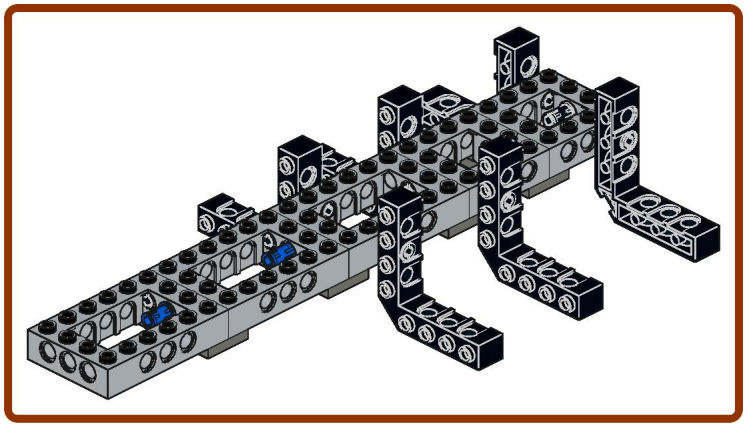

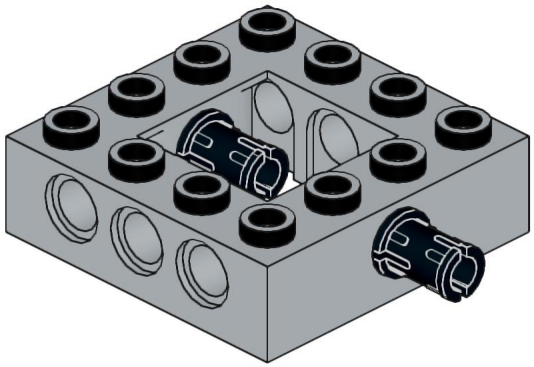

59

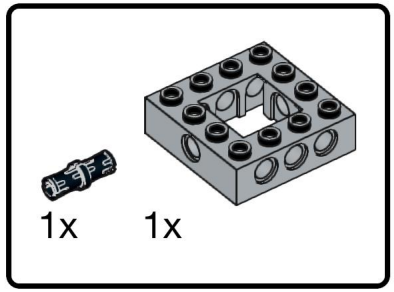

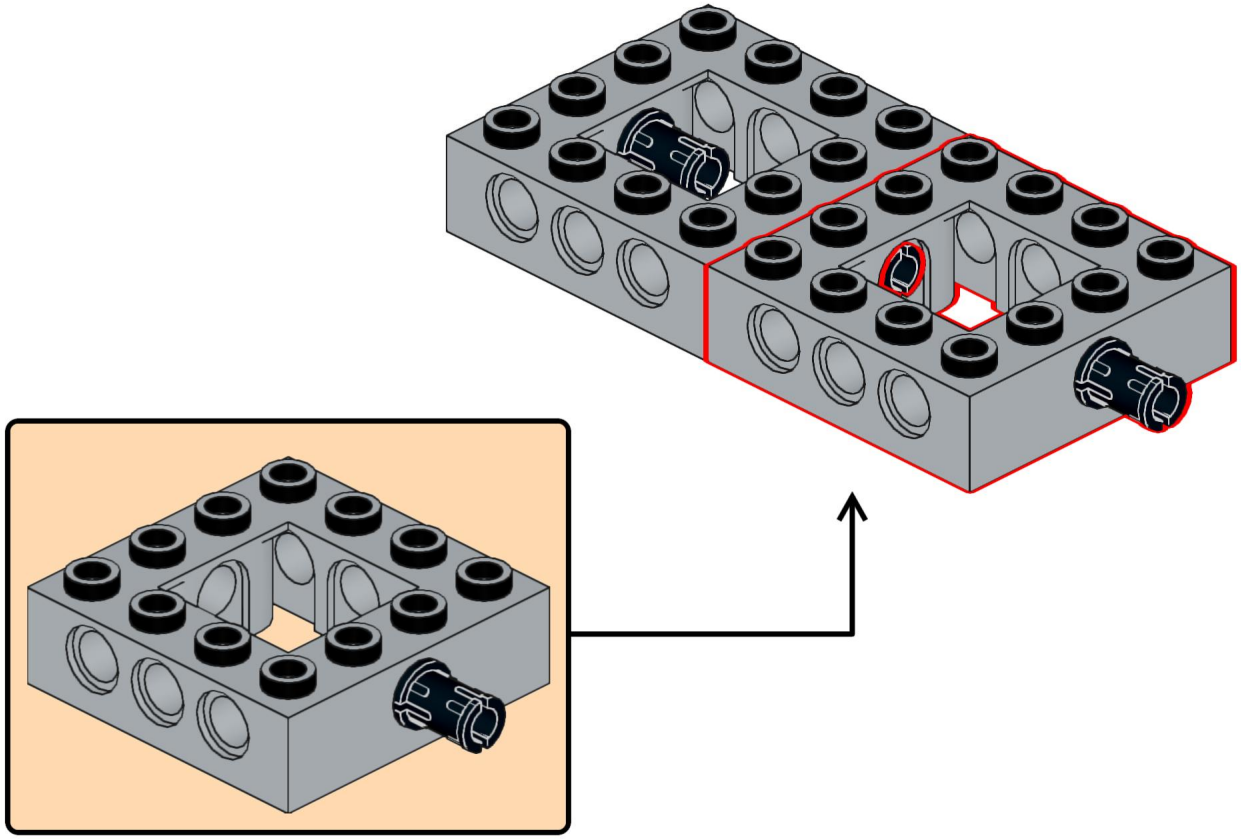

Designed by Michael Gertsch

60

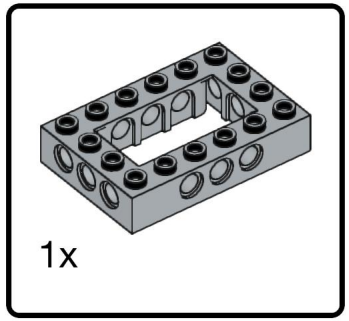

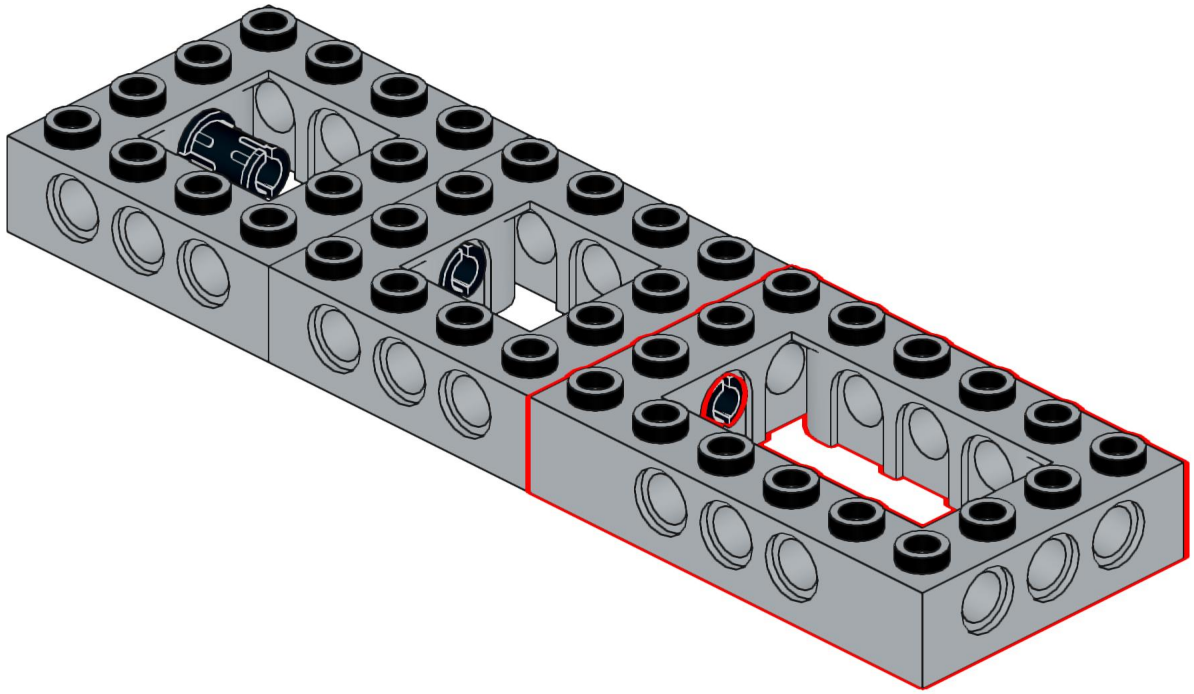

61

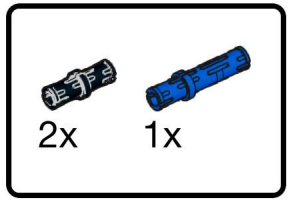

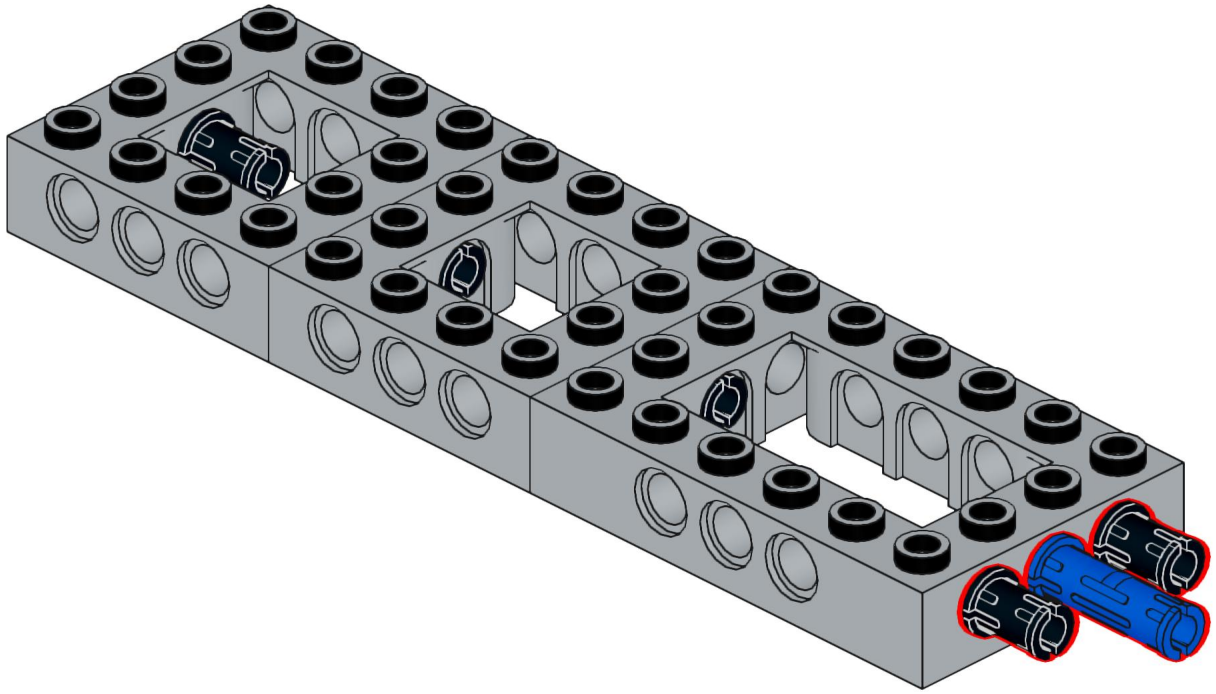

Designed by Michael Gertsch

62

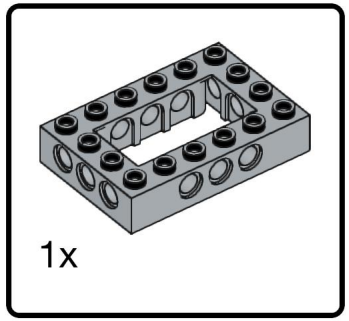

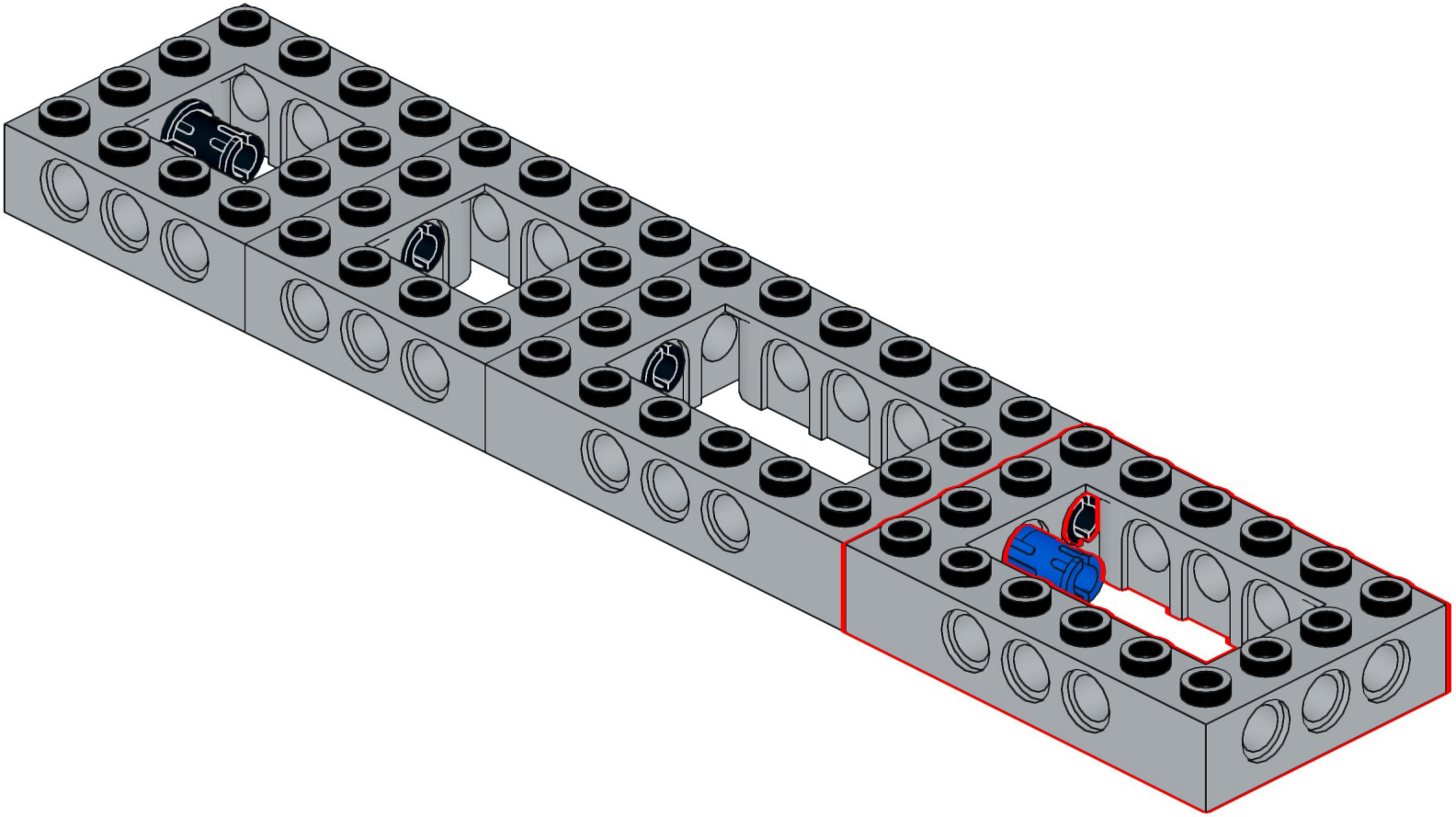

Designed by Michael Gertsch

63

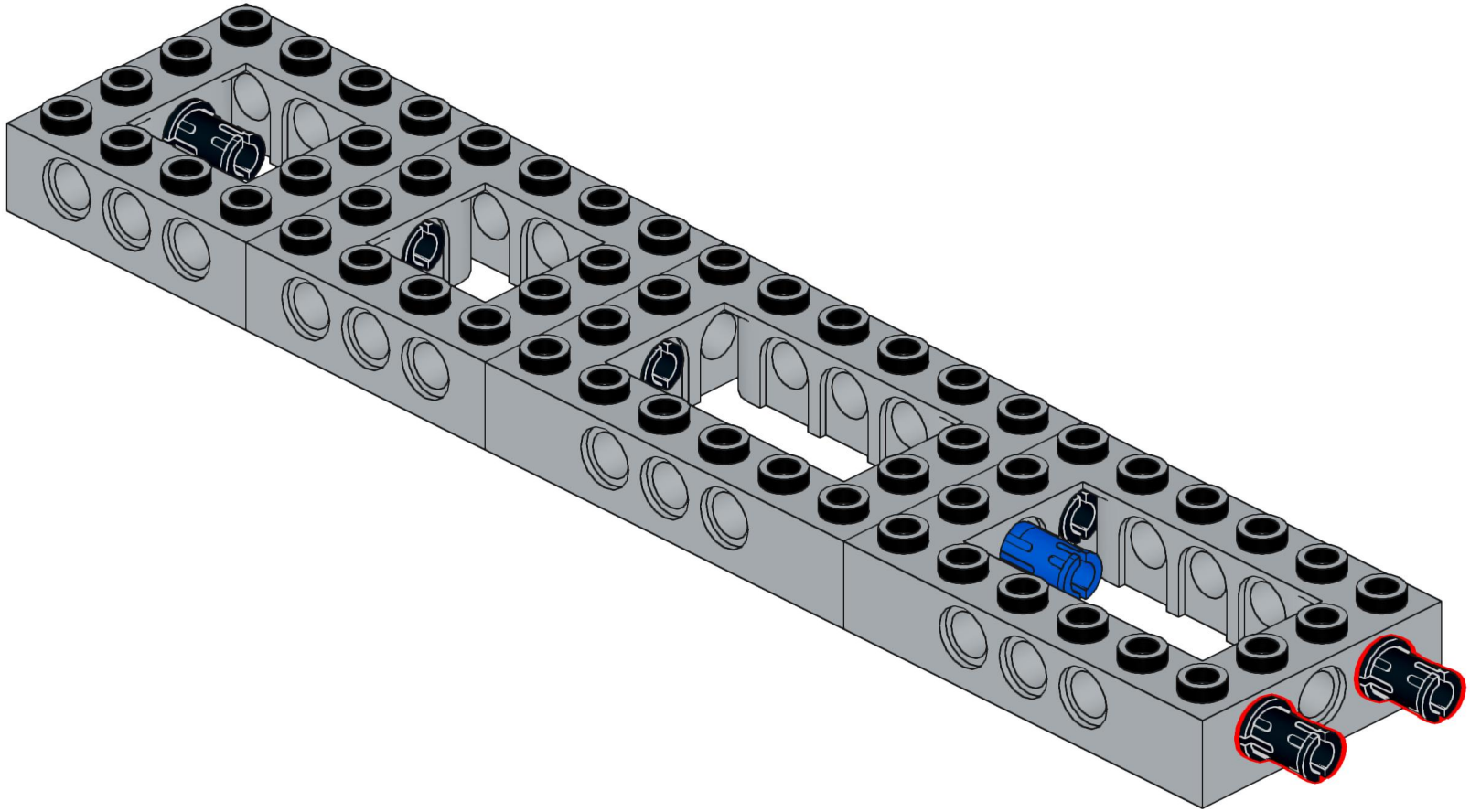

Designed by Michael Gertsch

64

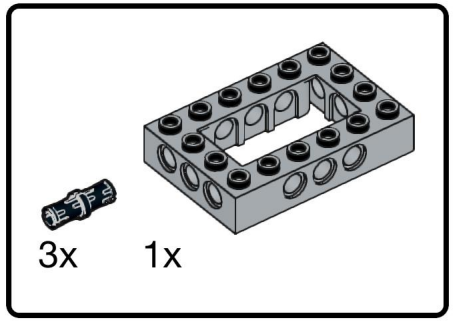

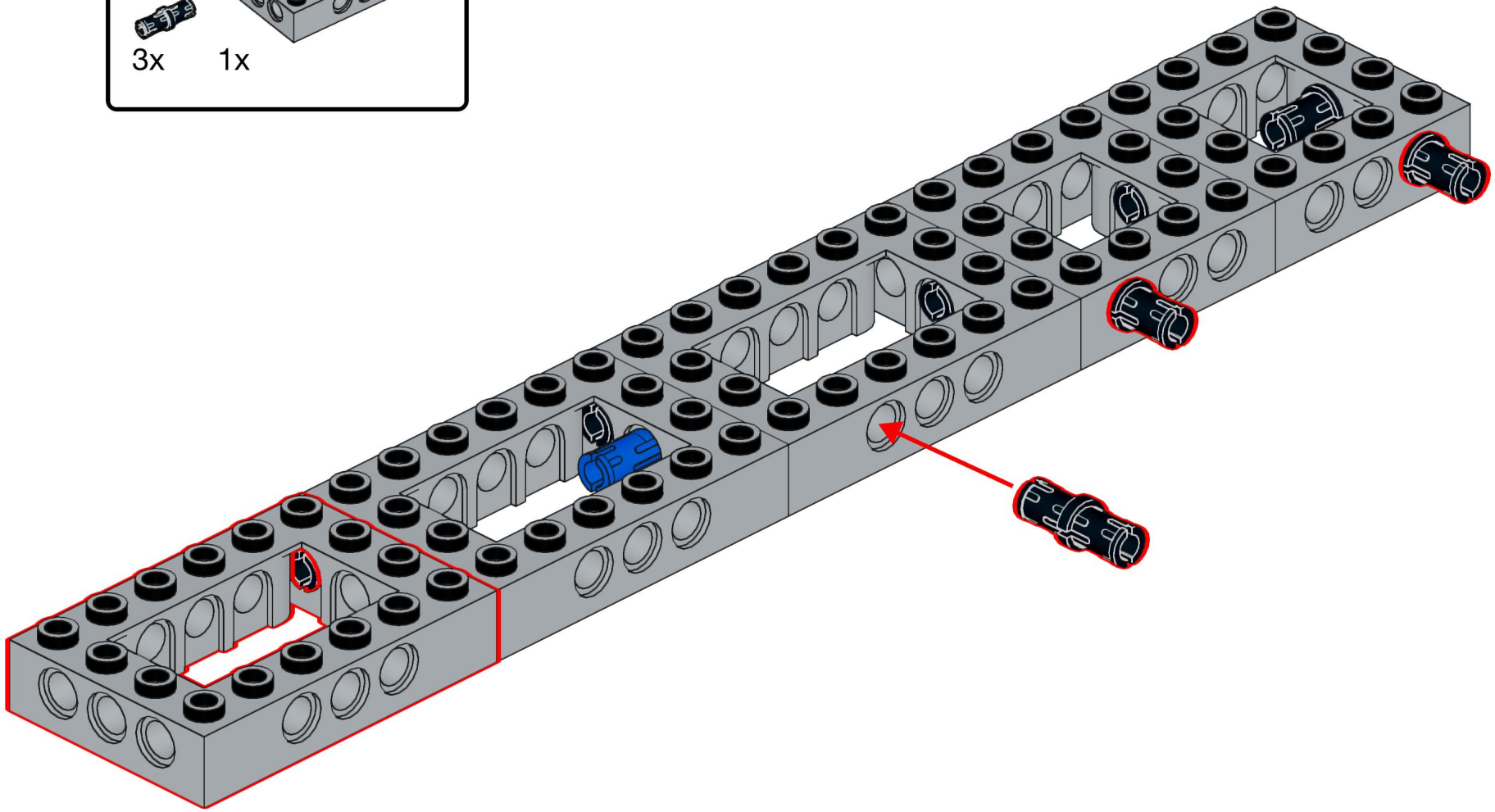

65

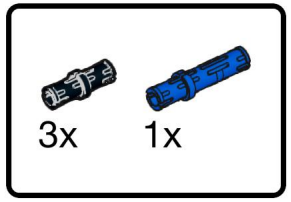

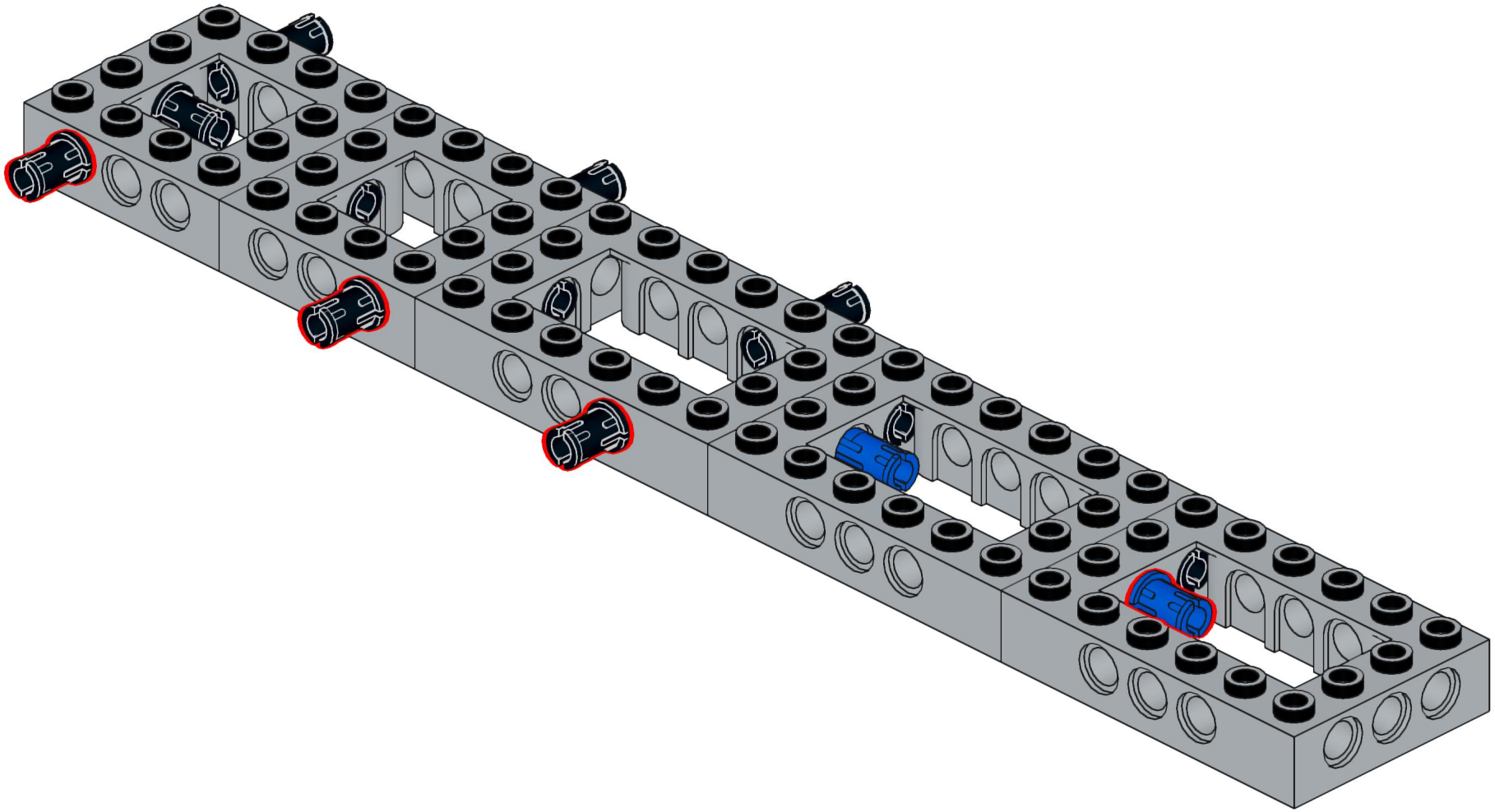

Designed by Michael Gertsch

66

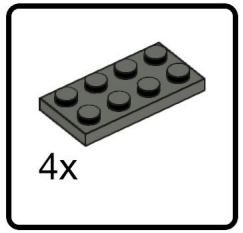

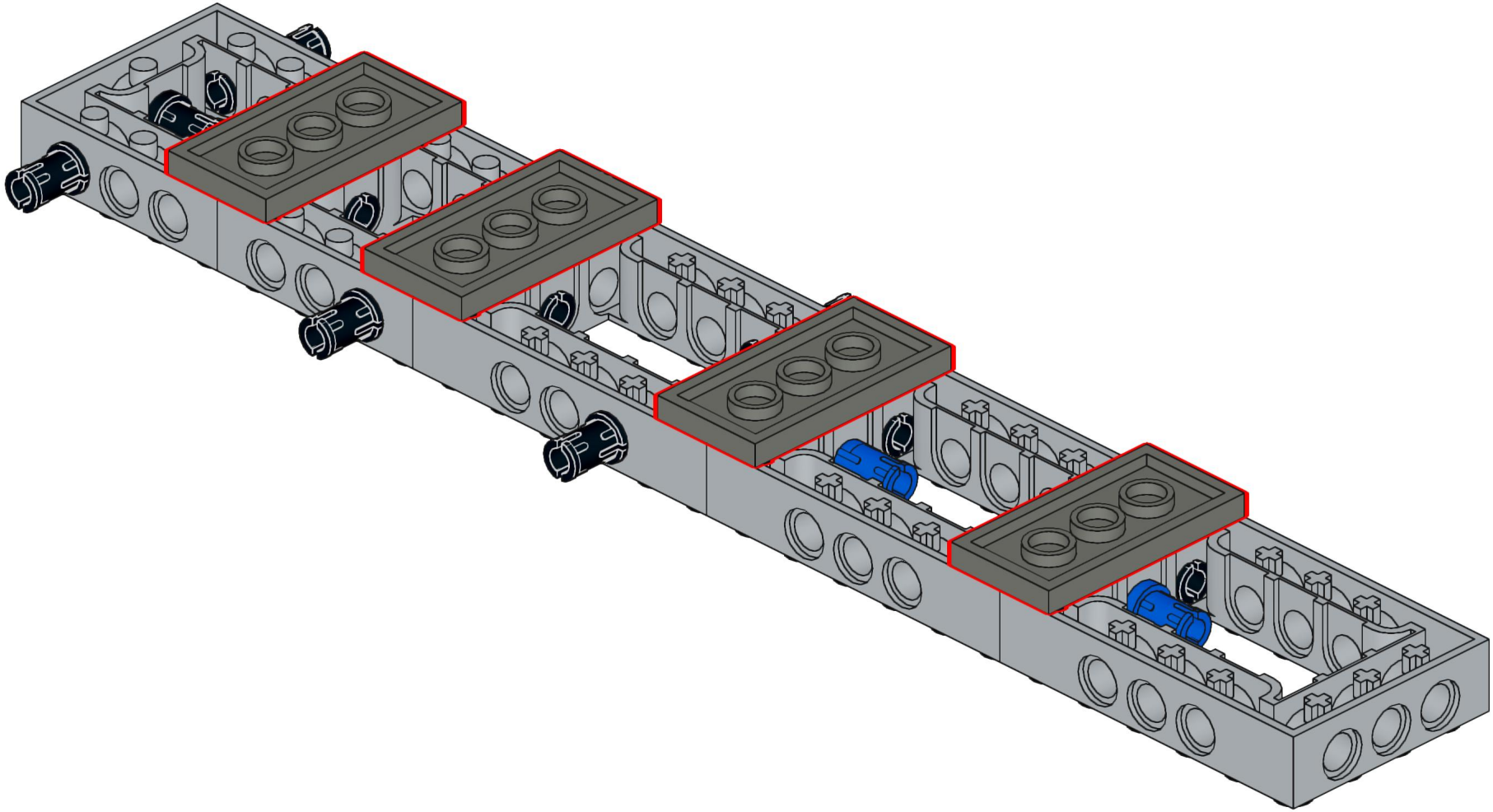

Designed by Michael Gertsch

67

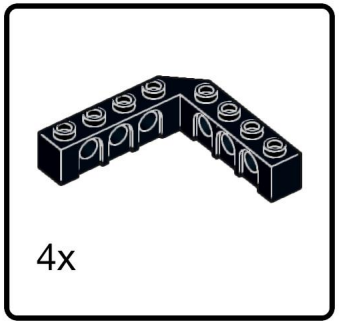

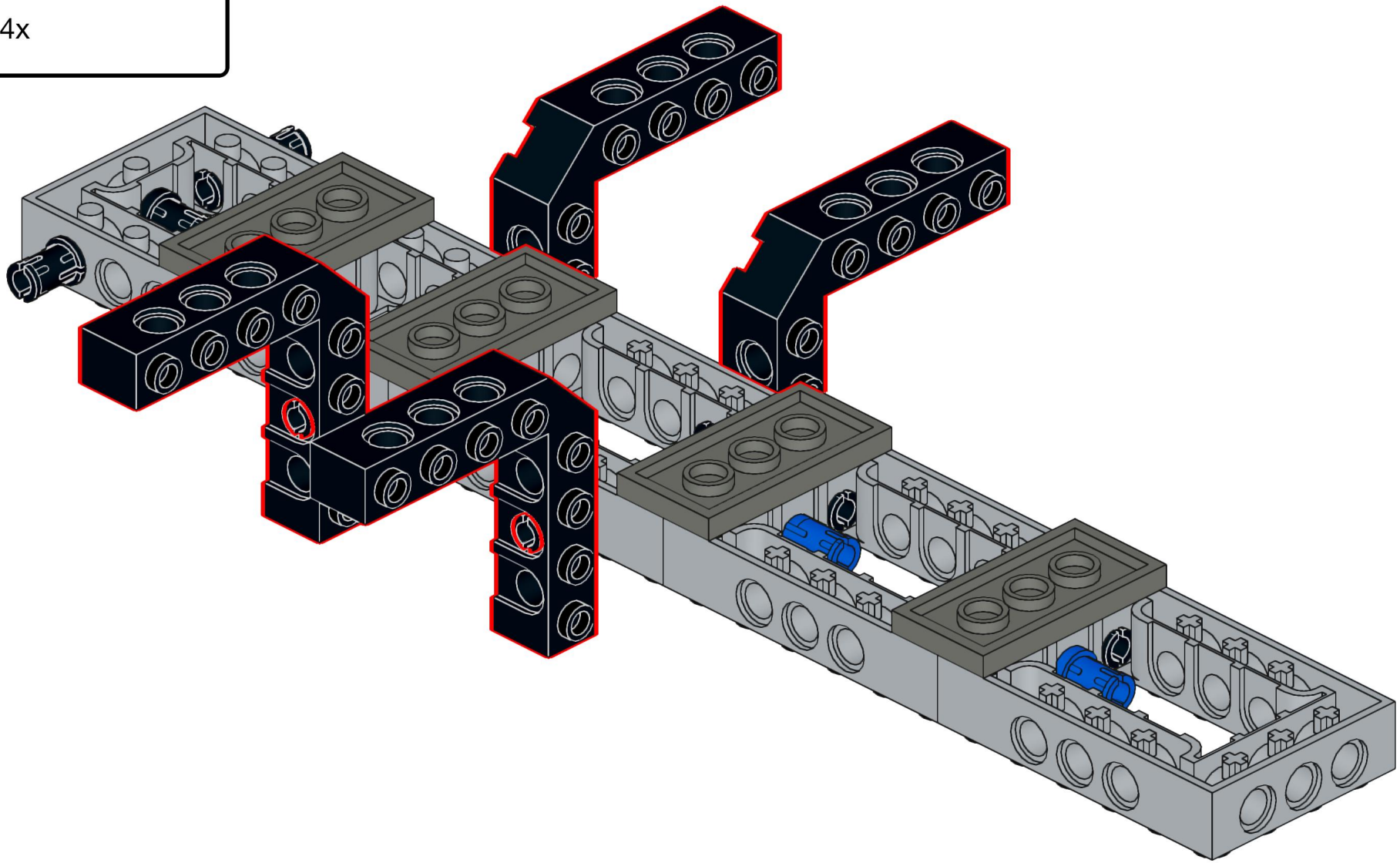

Designed by Michael Gertsch

68

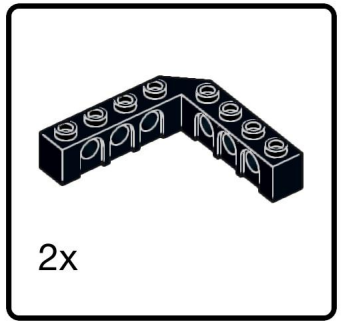

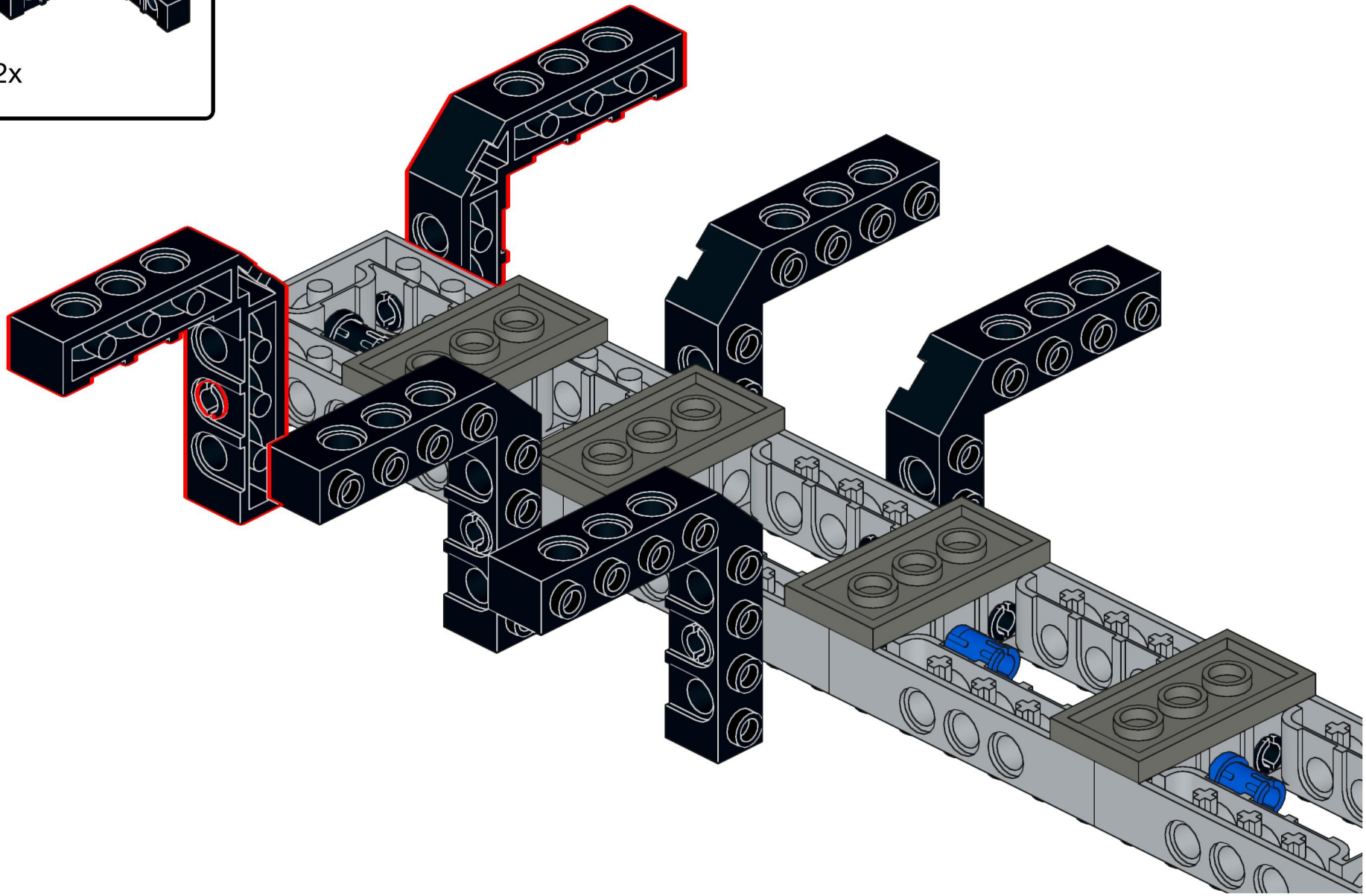

Designed by Michael Gertsch

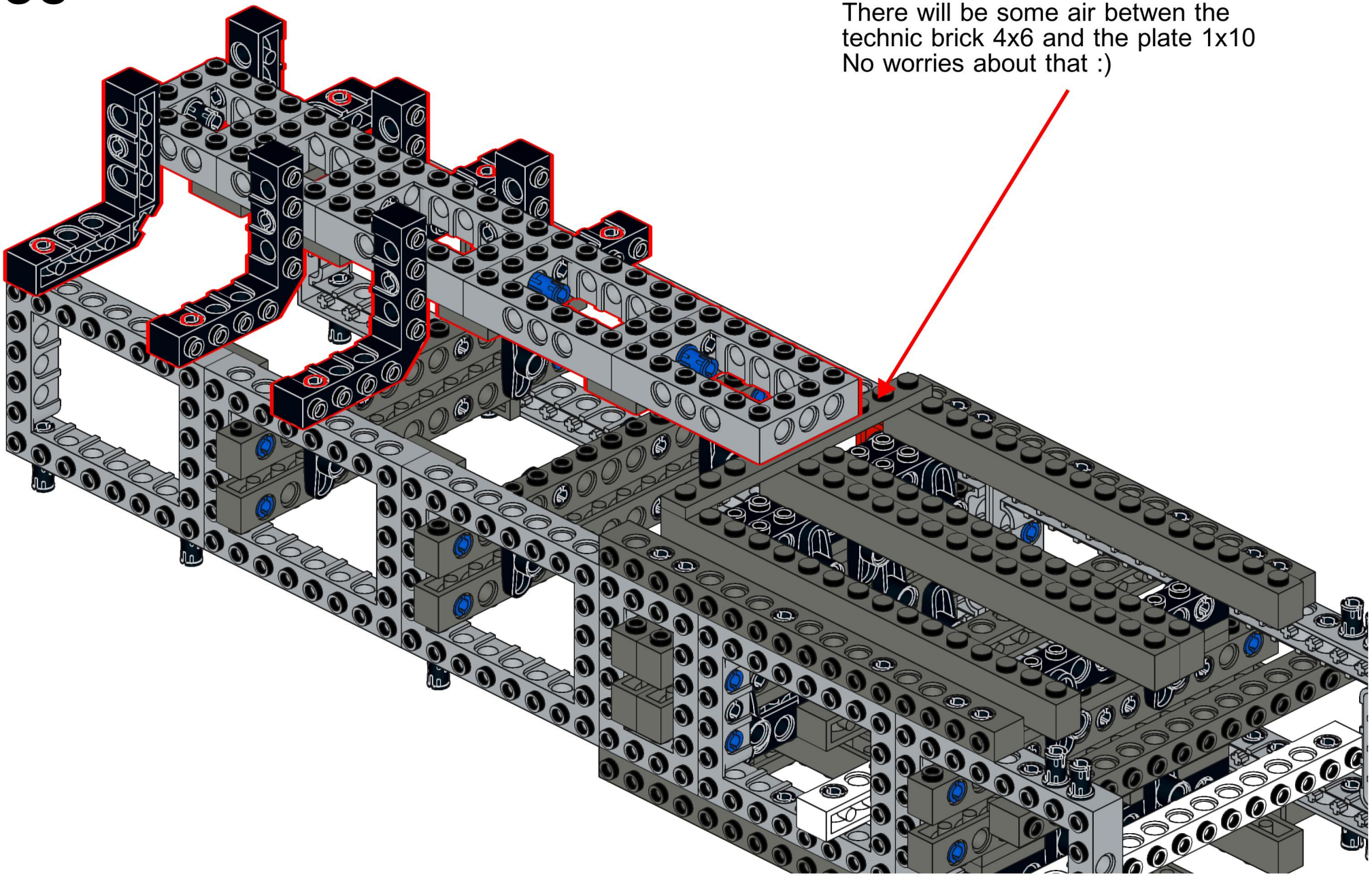
There will be some air betwen the
technic brick 4x6 and the plate 1x10
No worries about that :)

70

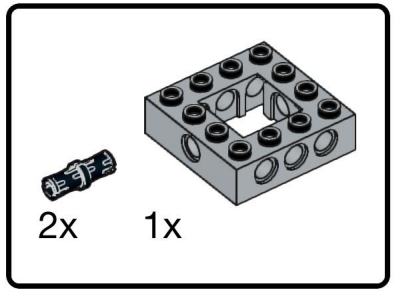

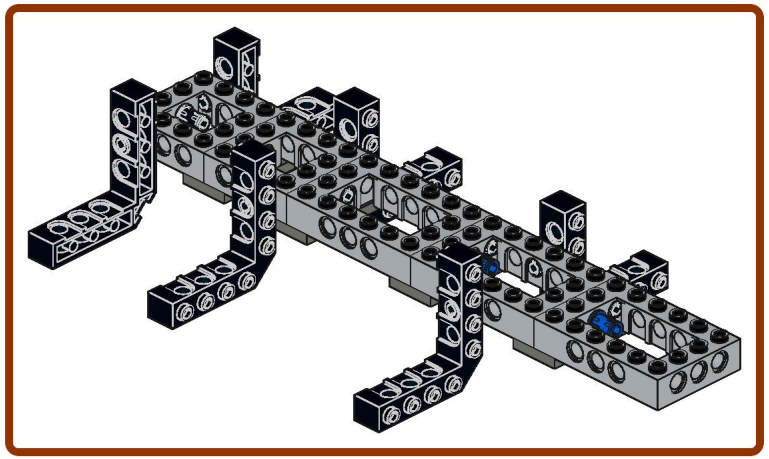

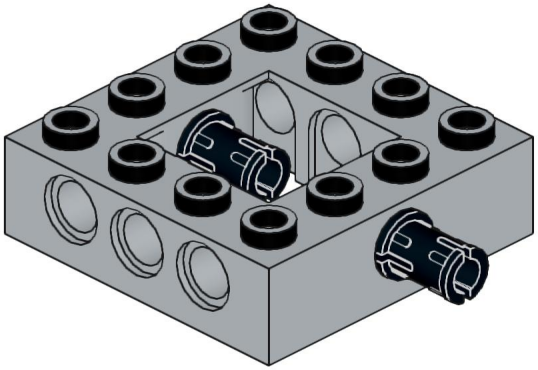

Designed by Michael Gertsch

71

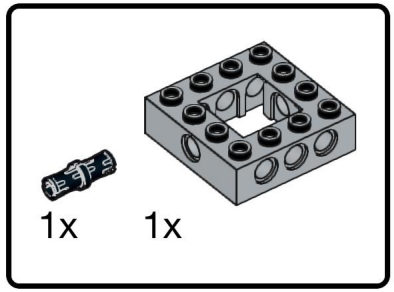

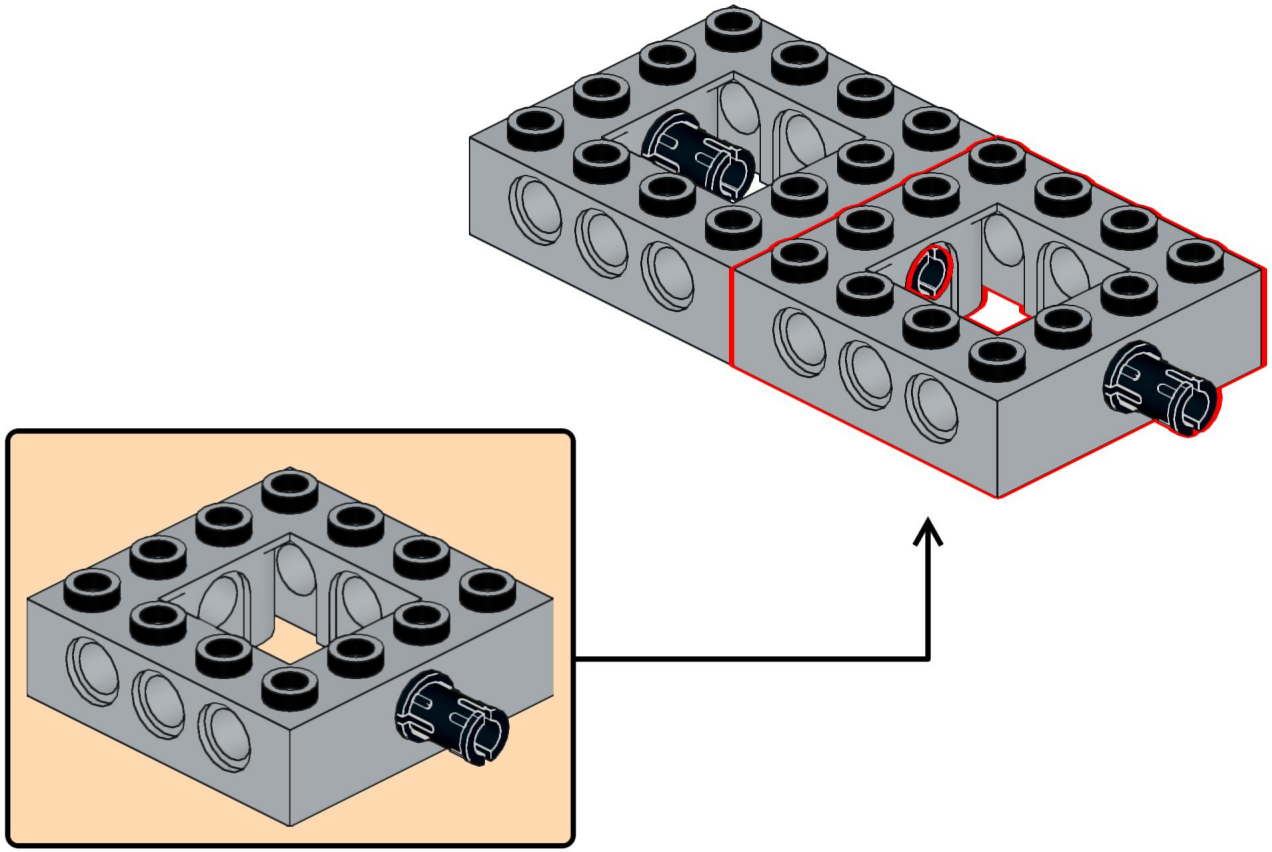

Designed by Michael Gertsch

72

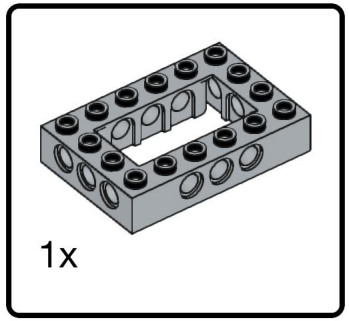

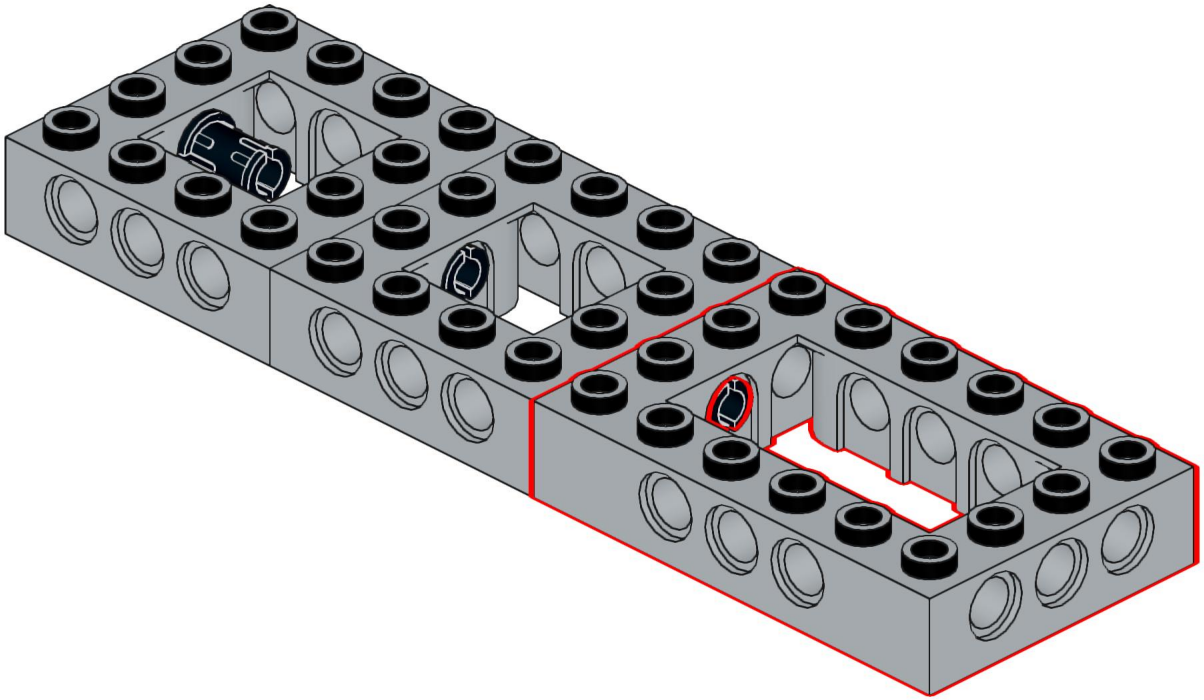

73

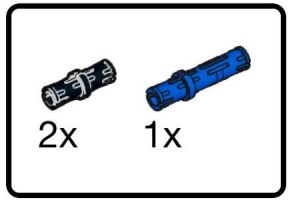

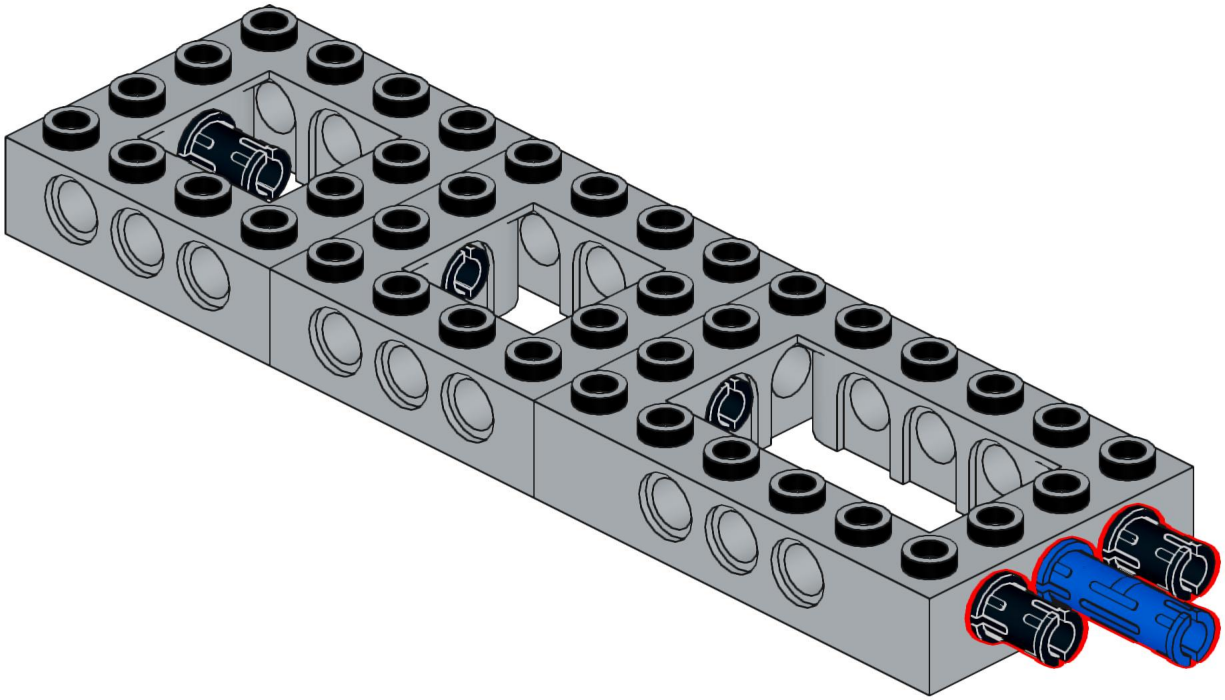

74

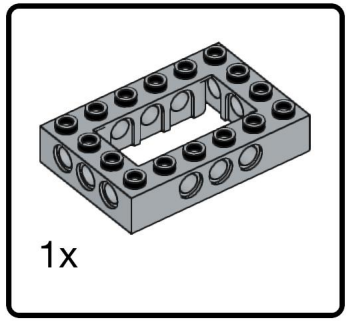

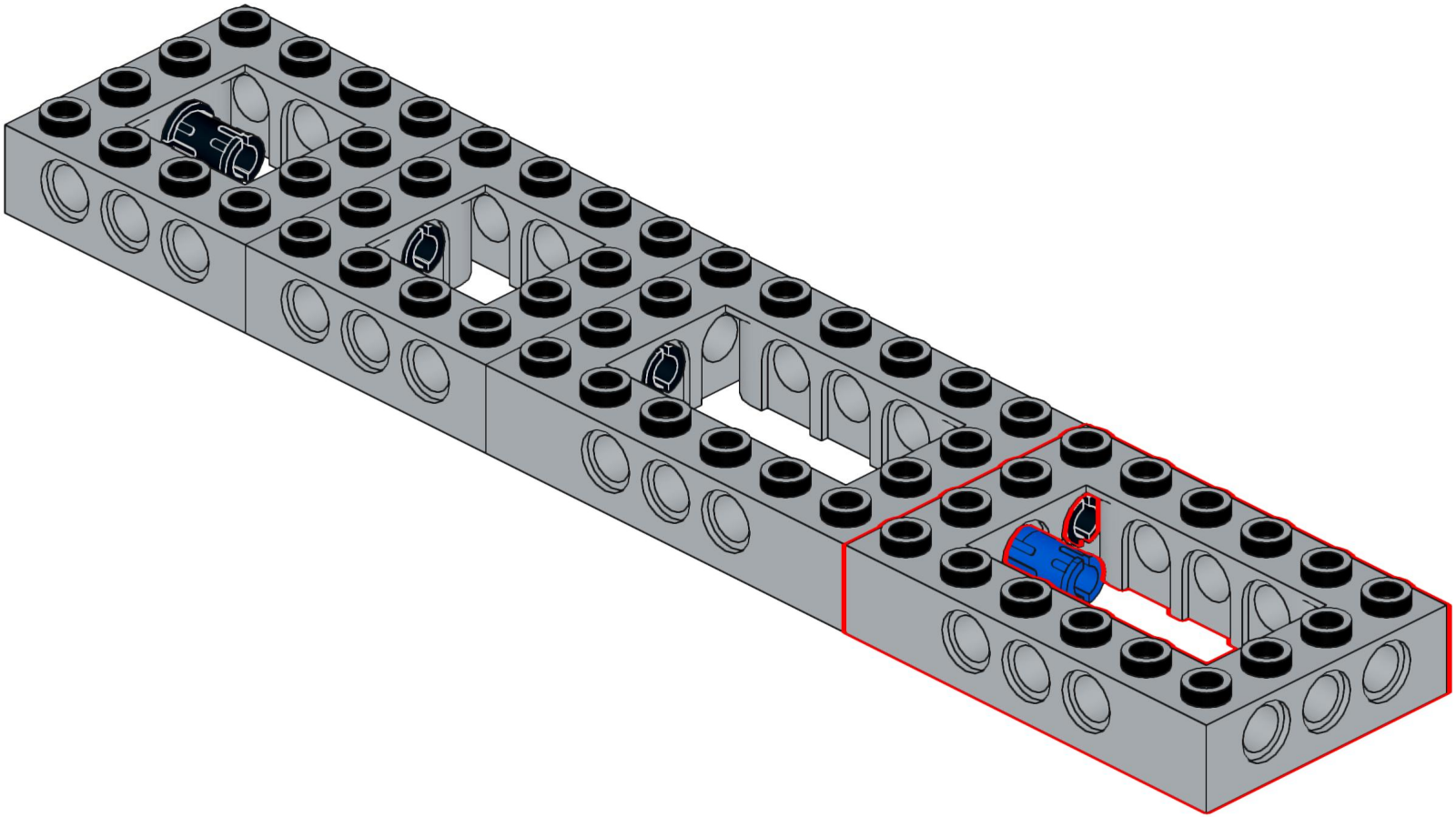

Designed by Michael Gertsch

75

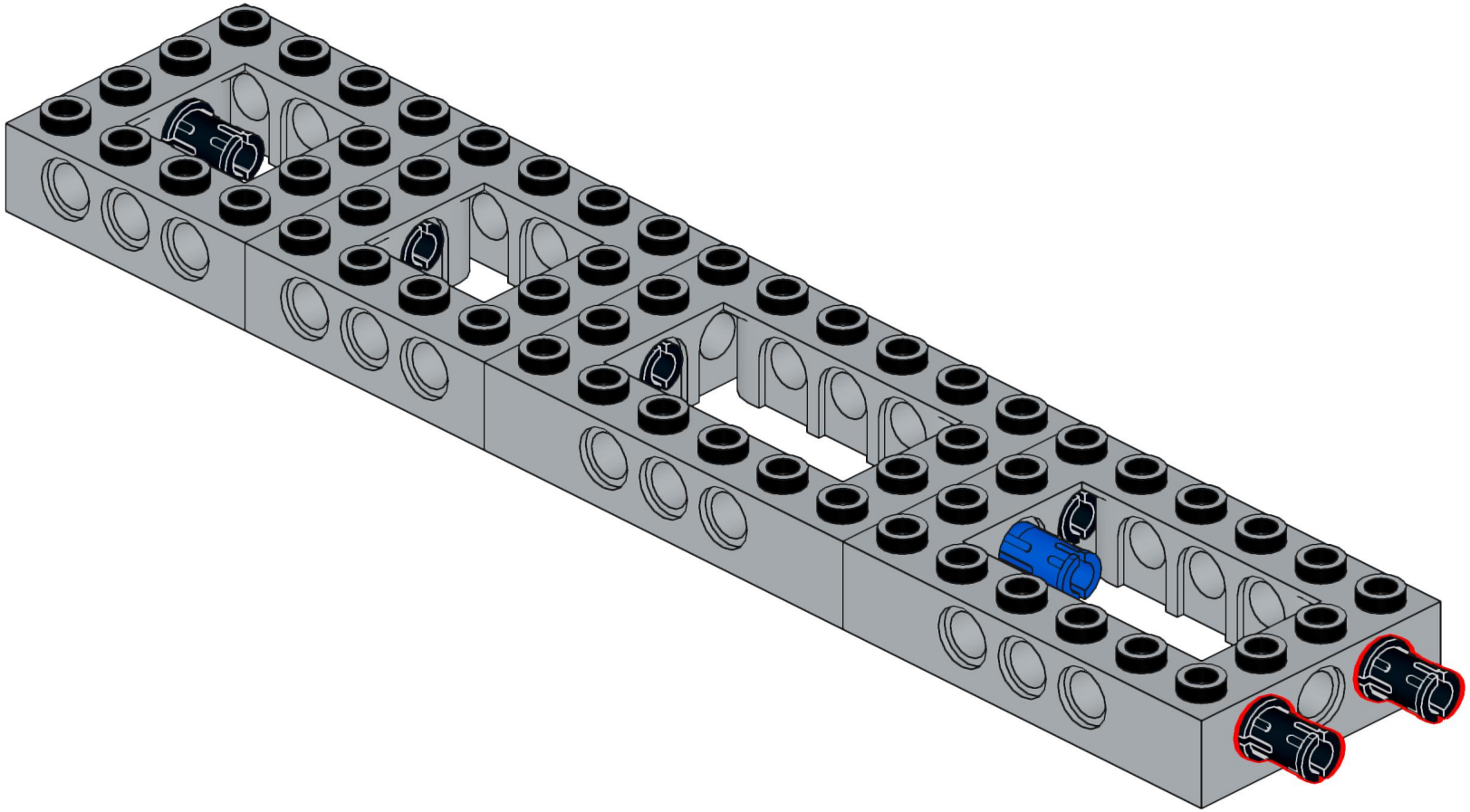

Designed by Michael Gertsch

76

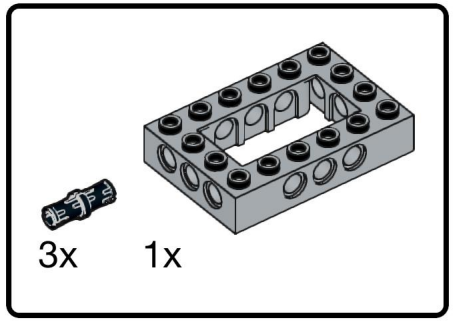

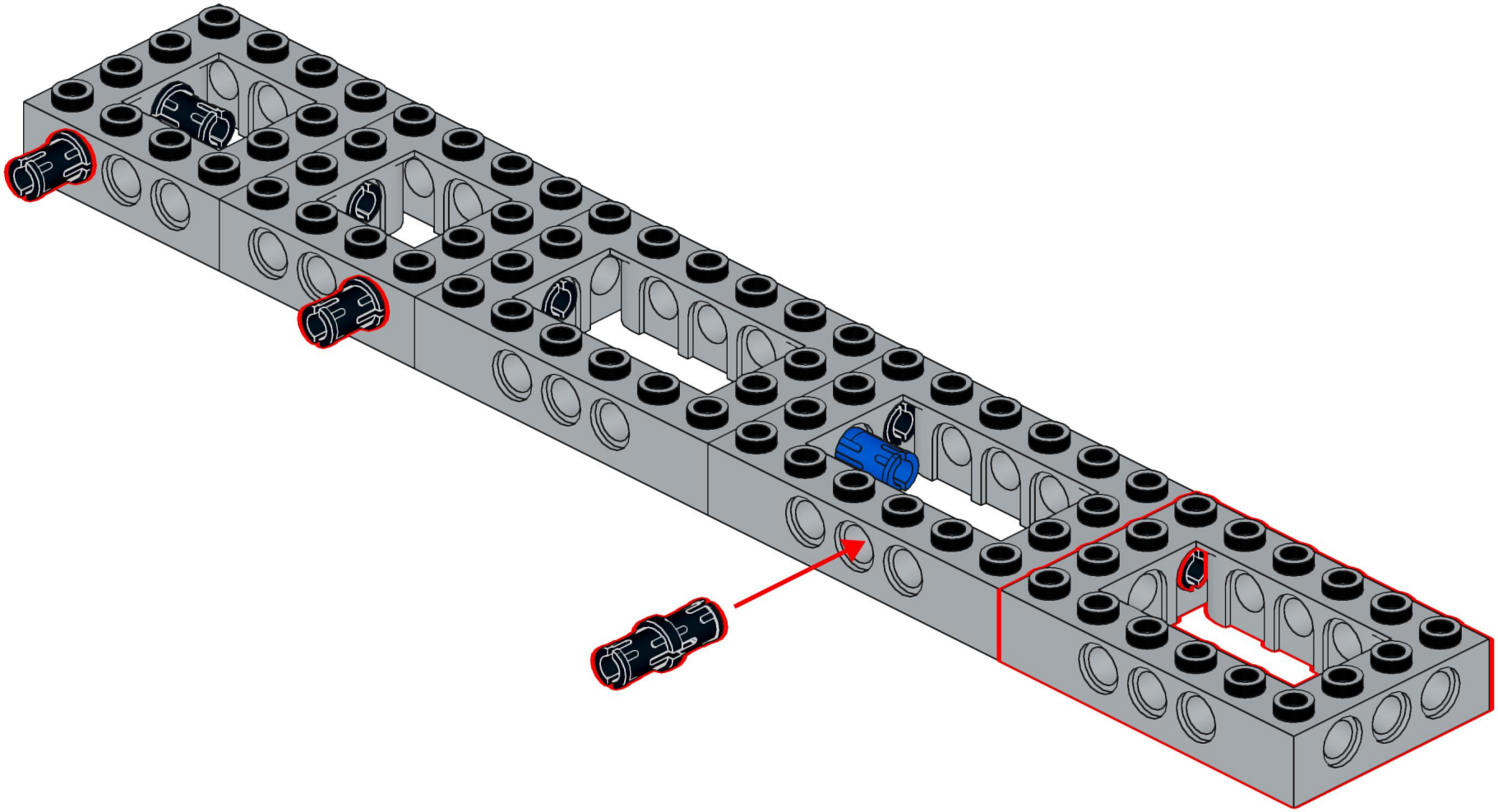

Designed by Michael Gertsch

77

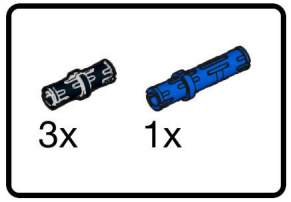

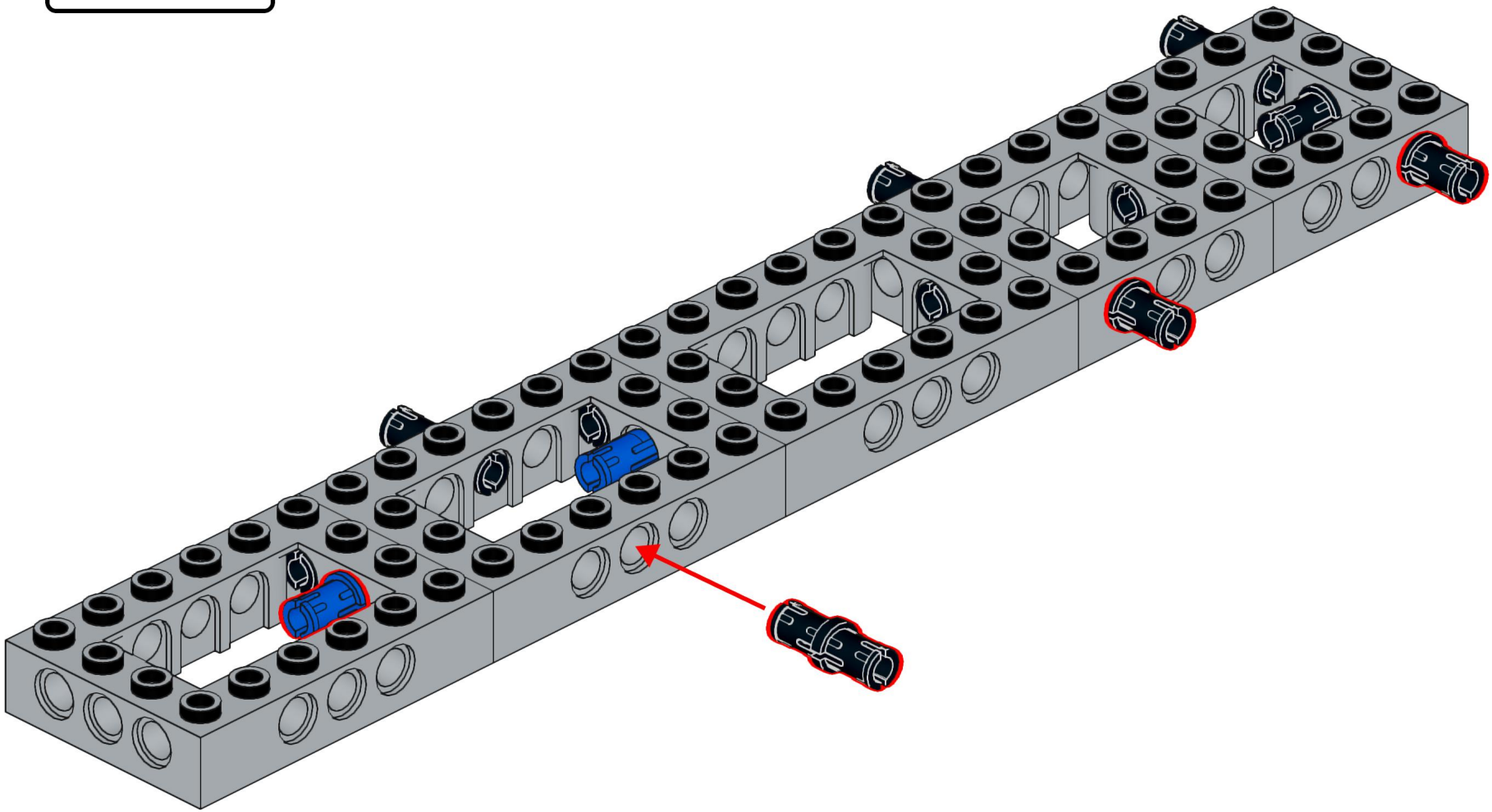

Designed by Michael Gertsch

78

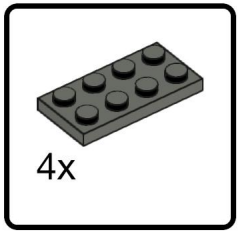

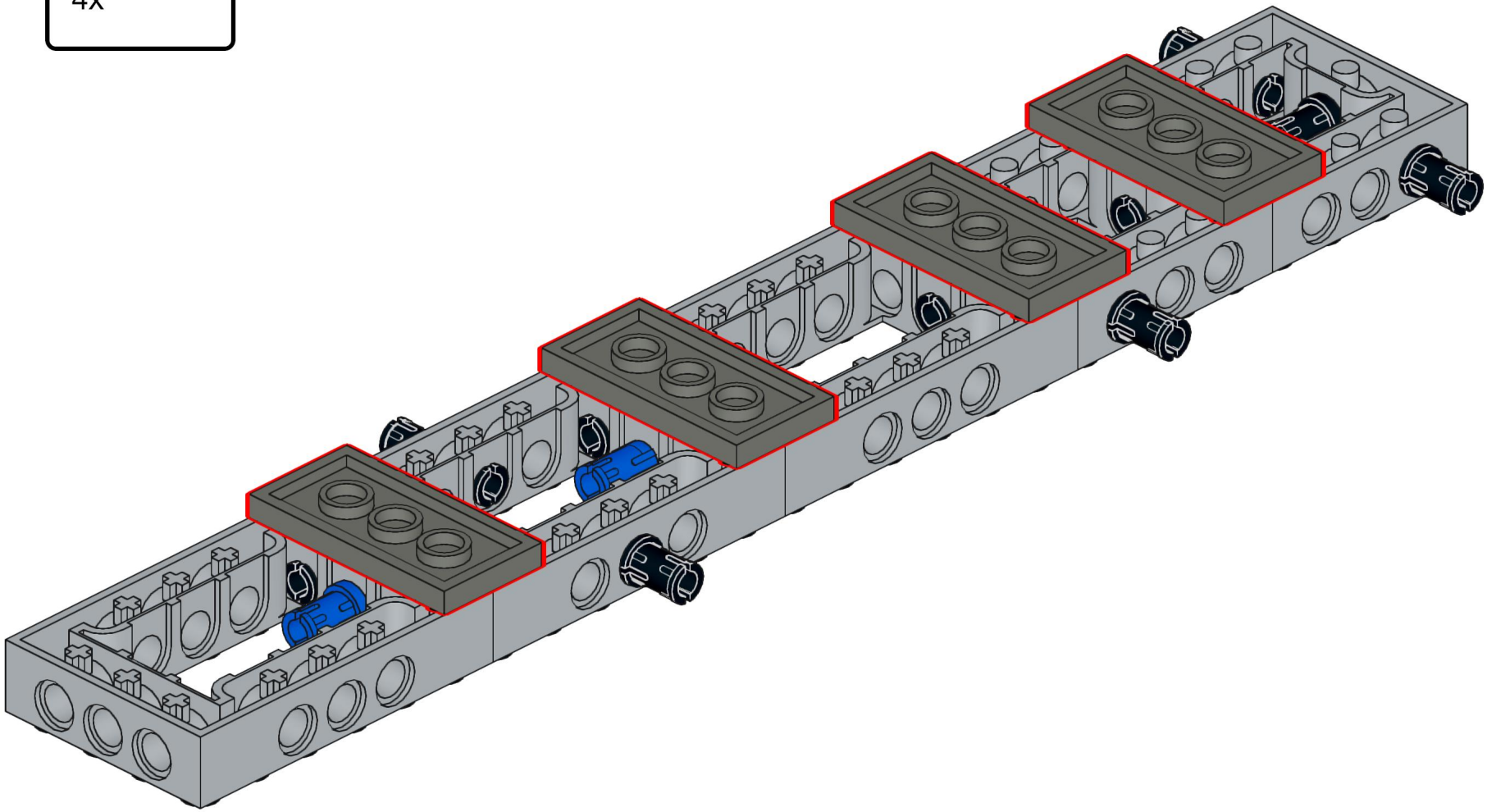

Designed by Michael Gertsch

79

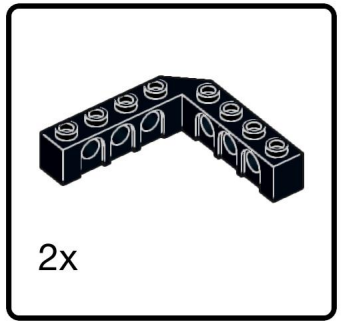

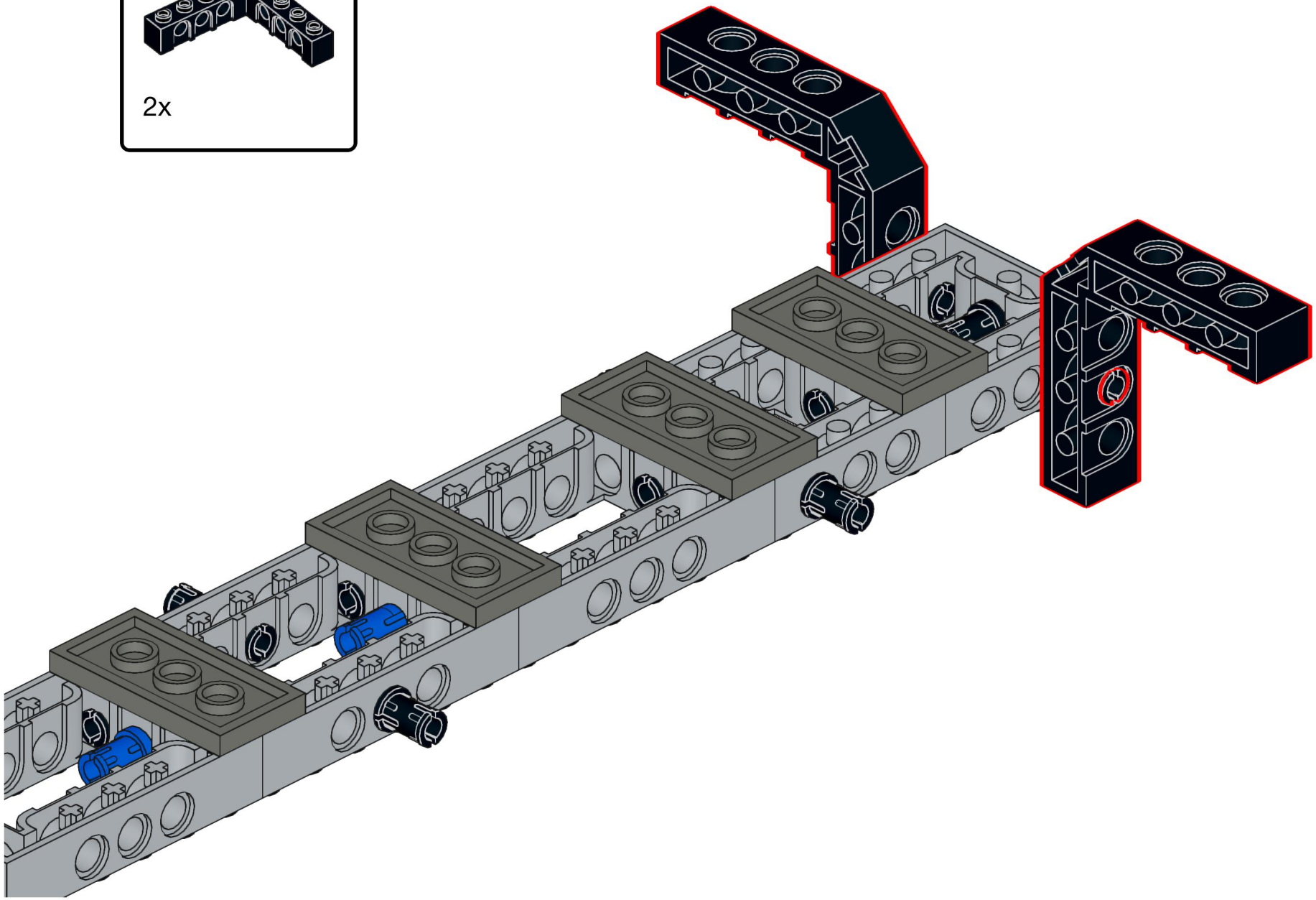

Designed by Michael Gertsch

80

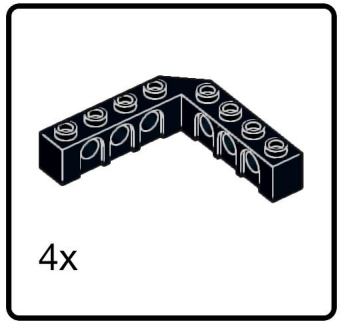

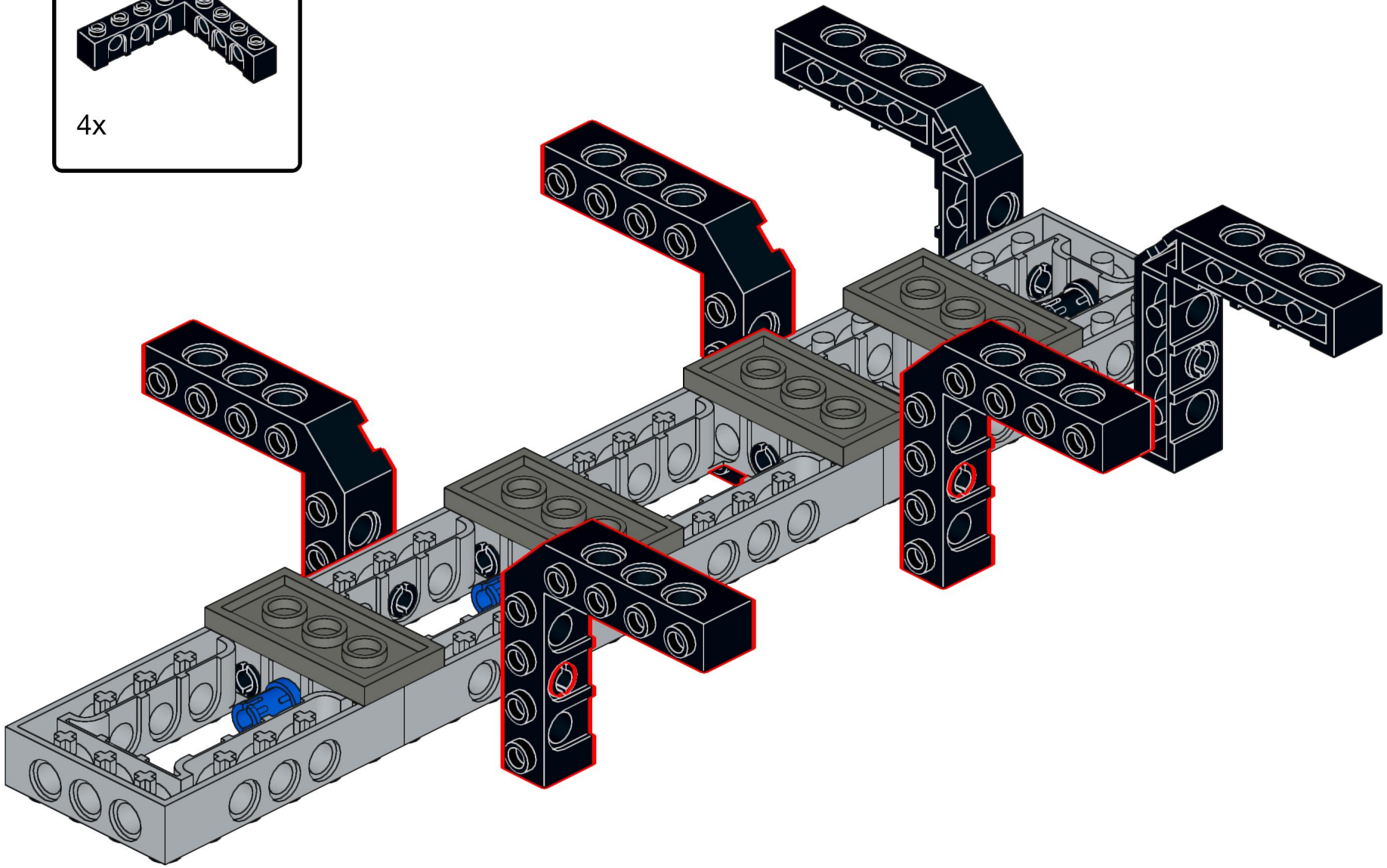

Designed by Michael Gertsch

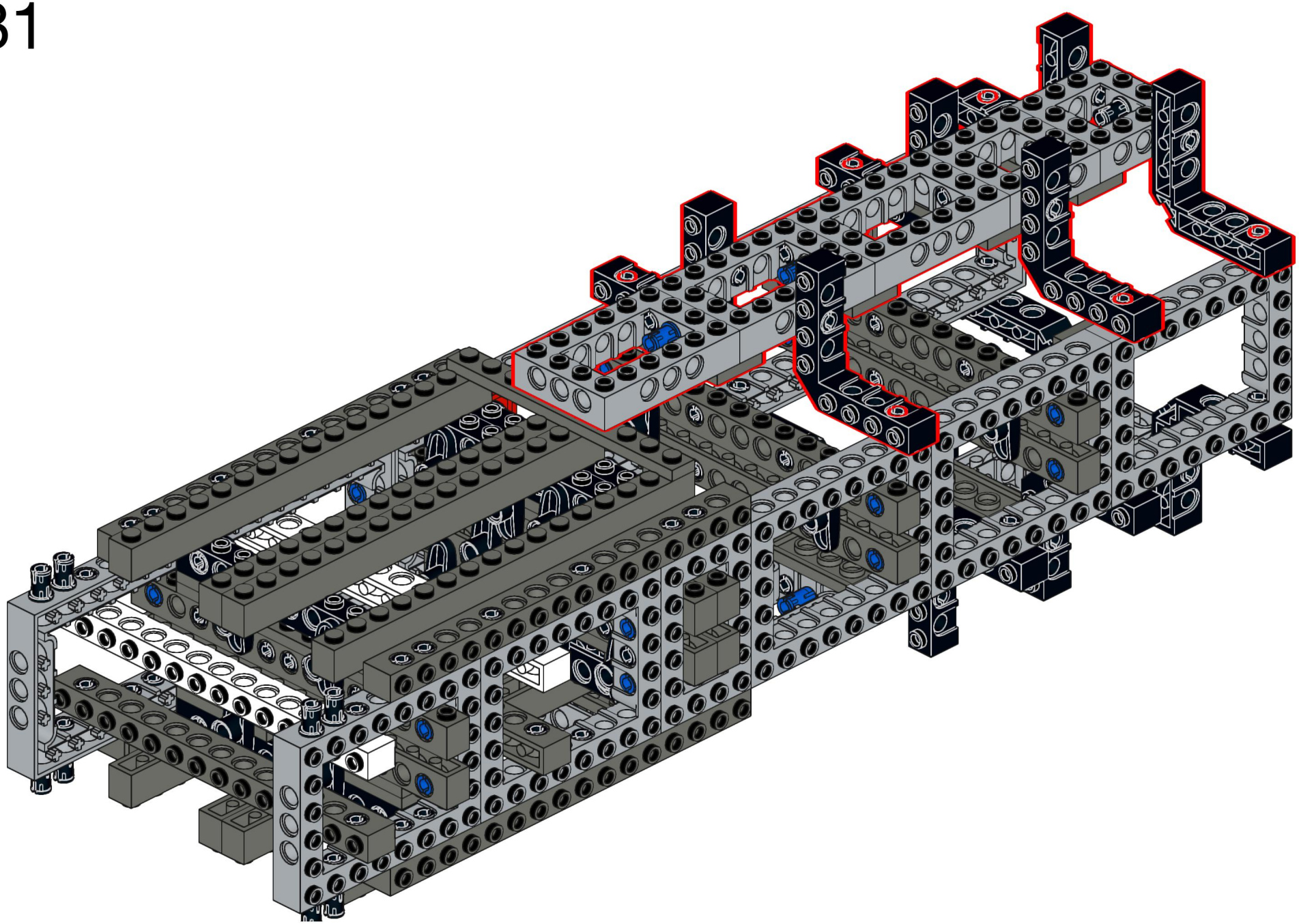

82

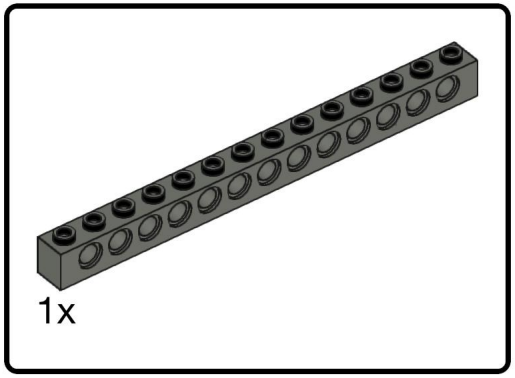

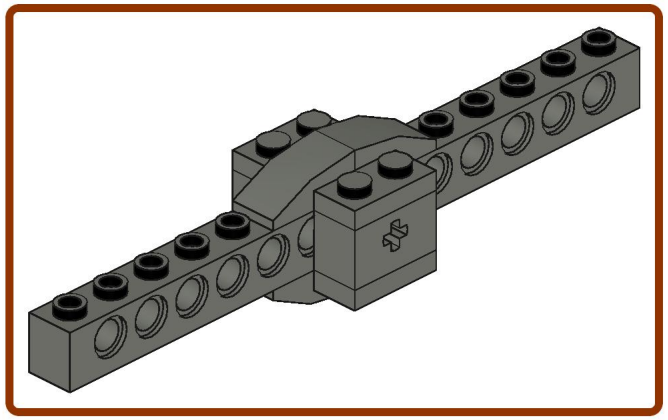

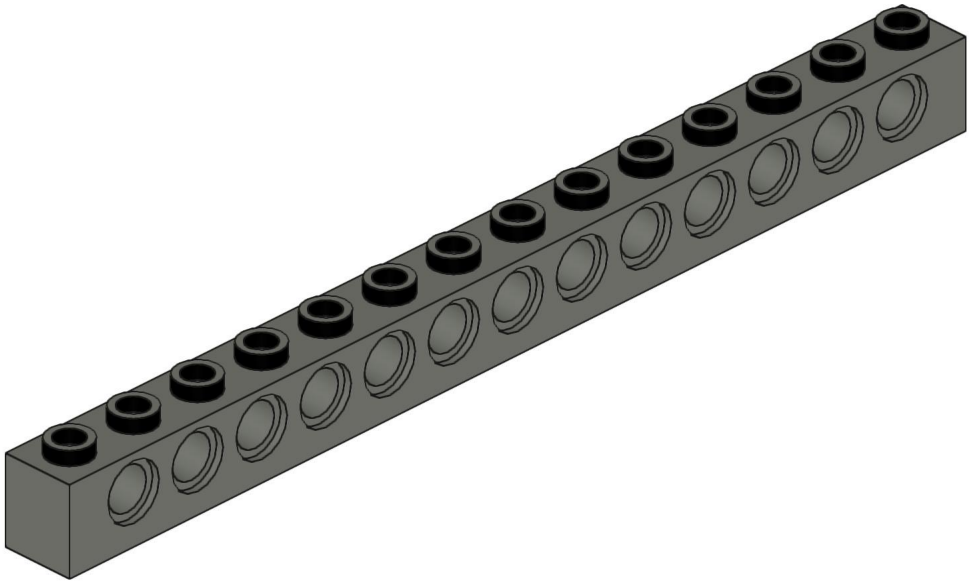

83

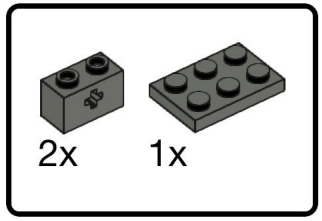

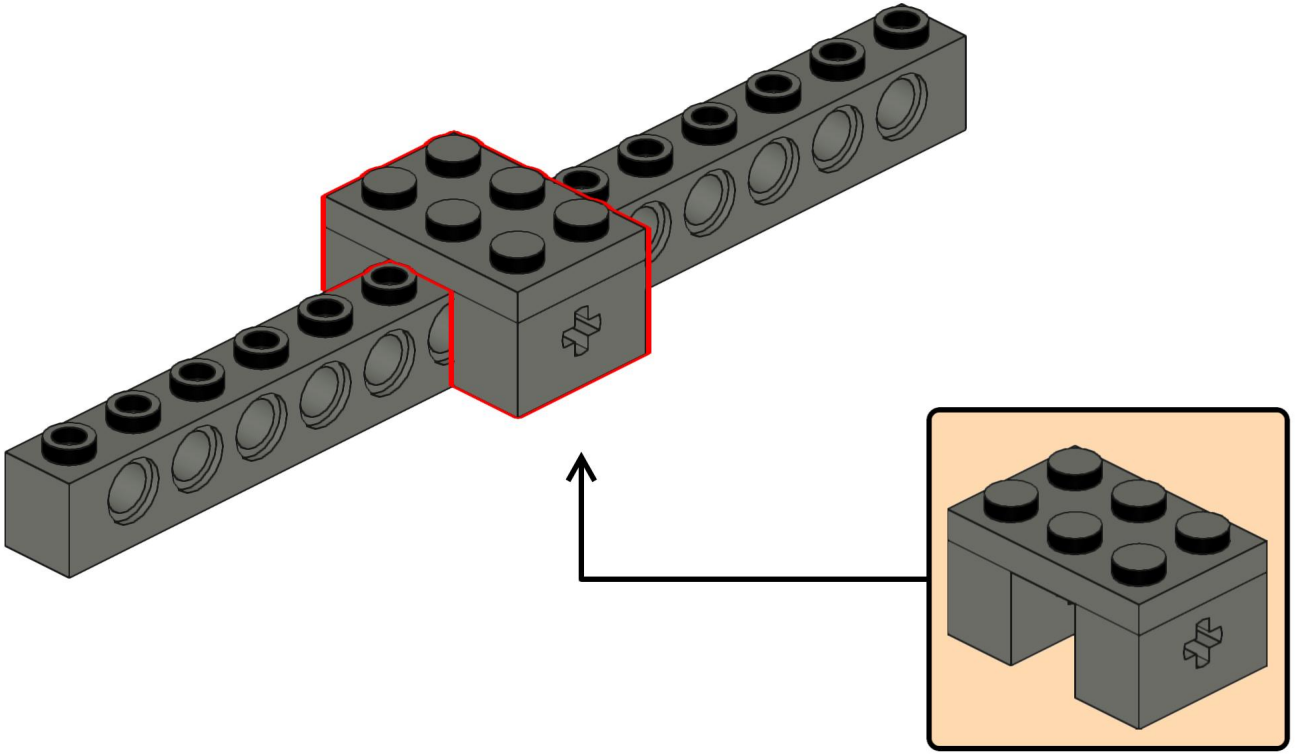

Designed by Michael Gertsch

84

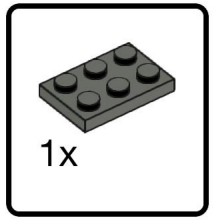

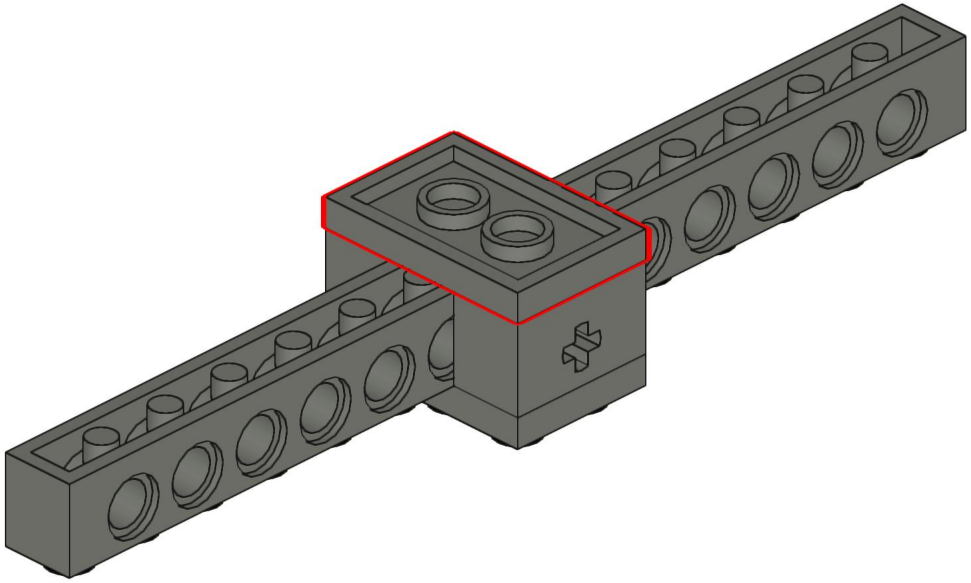

Designed by Michael Gertsch

85

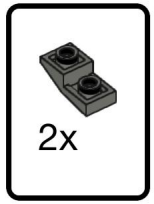

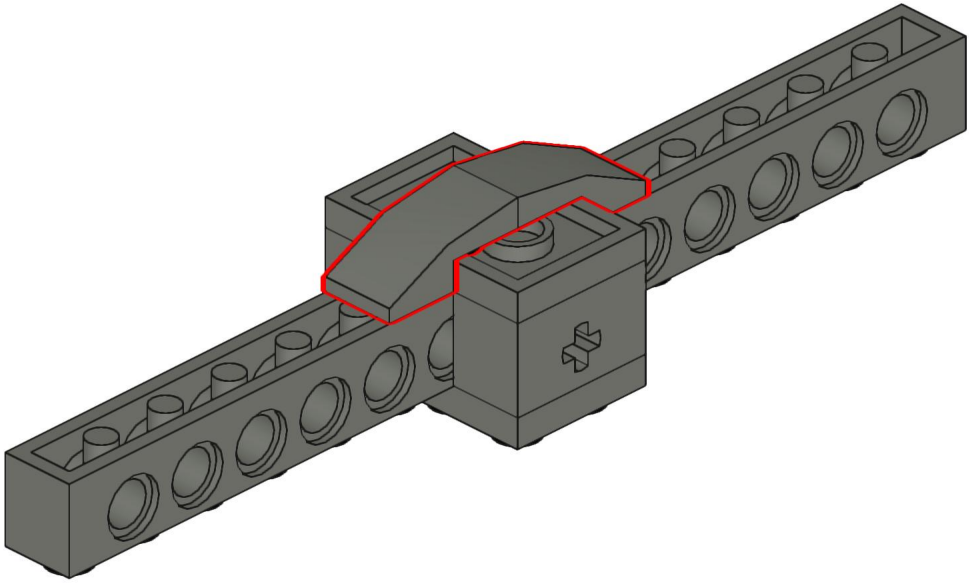

Designed by Michael Gertsch

86

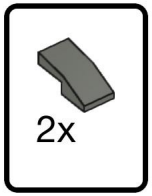

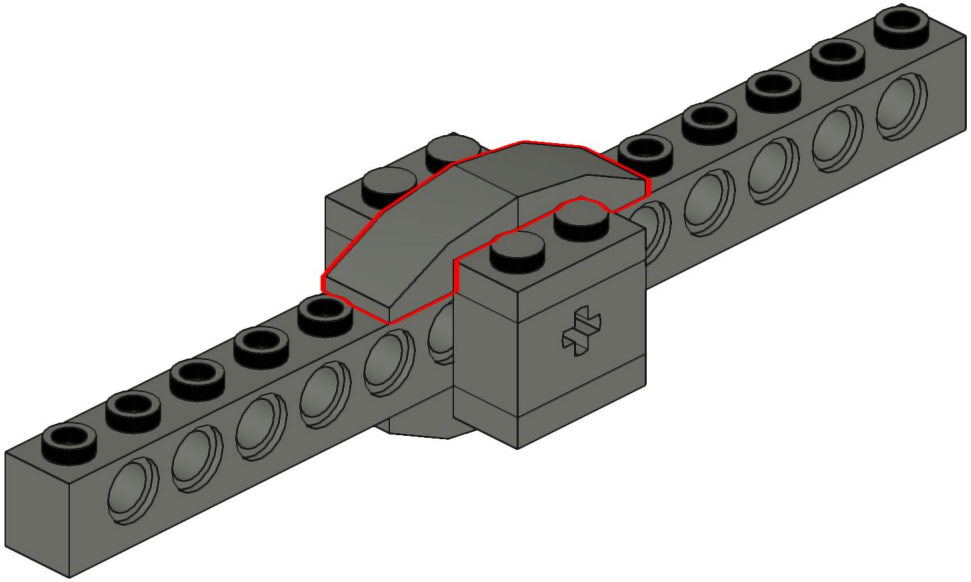

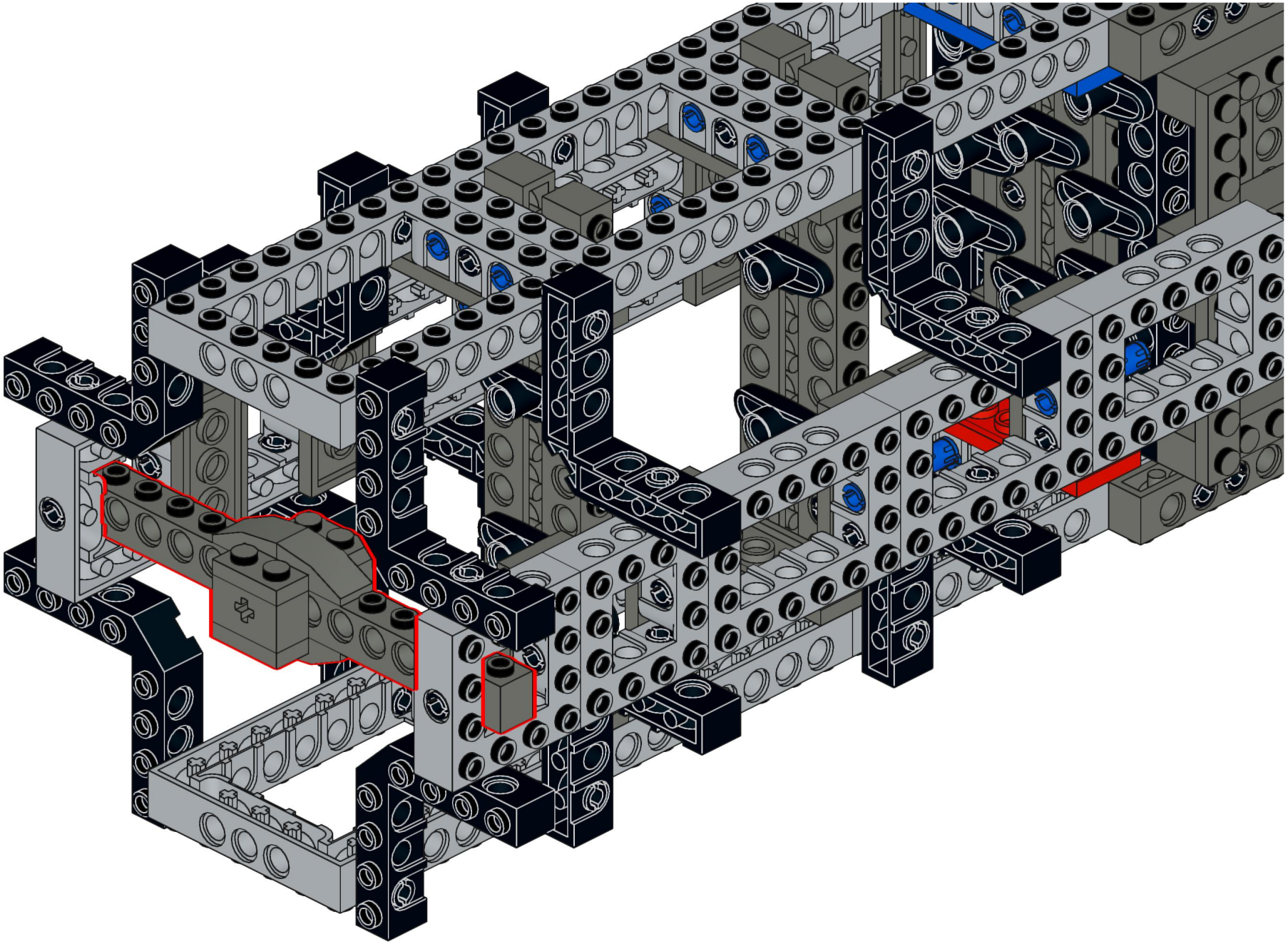

88

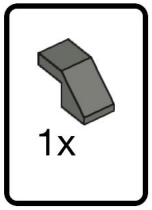

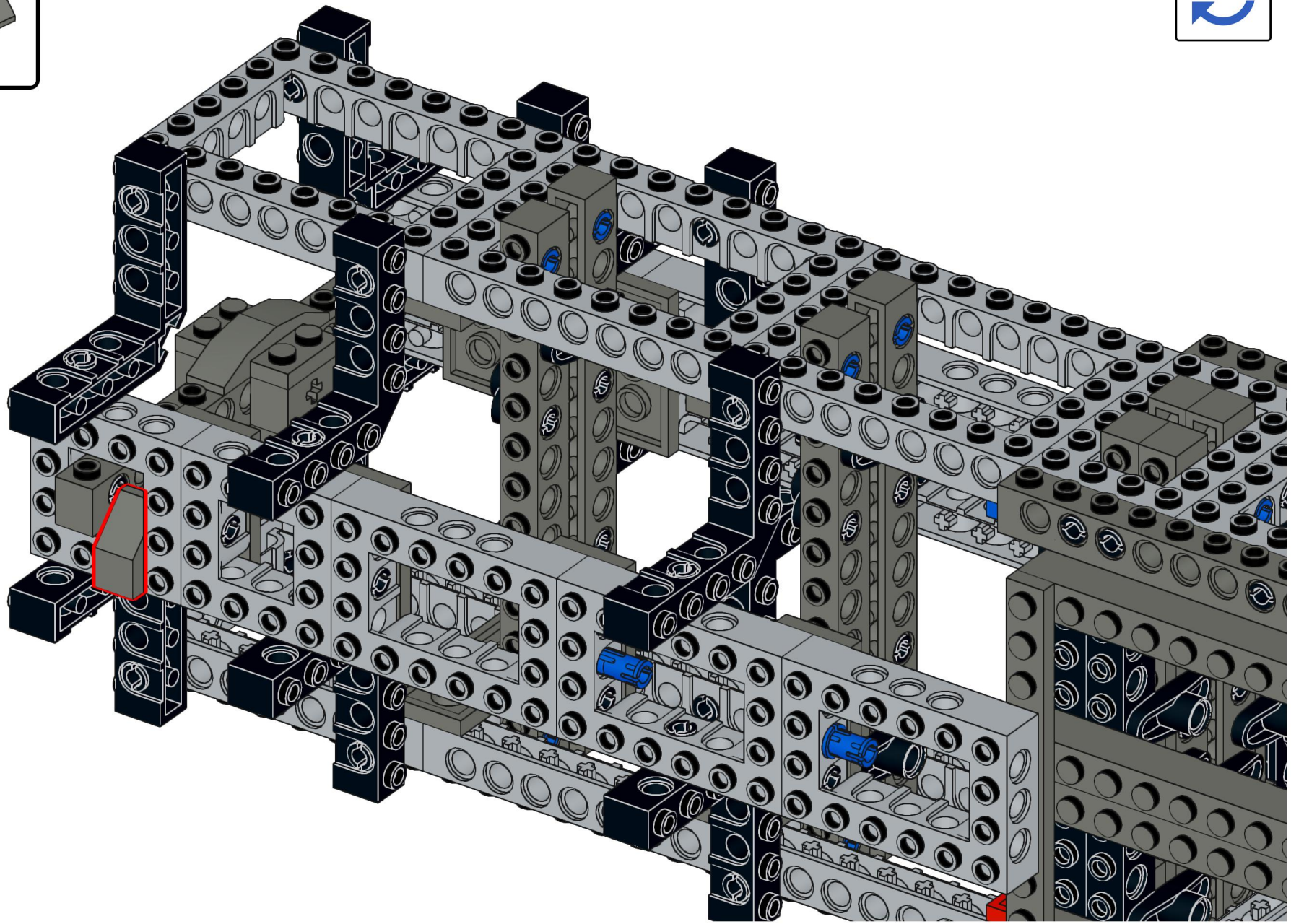

Designed by Michael Gertsch

89

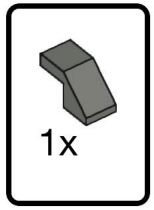

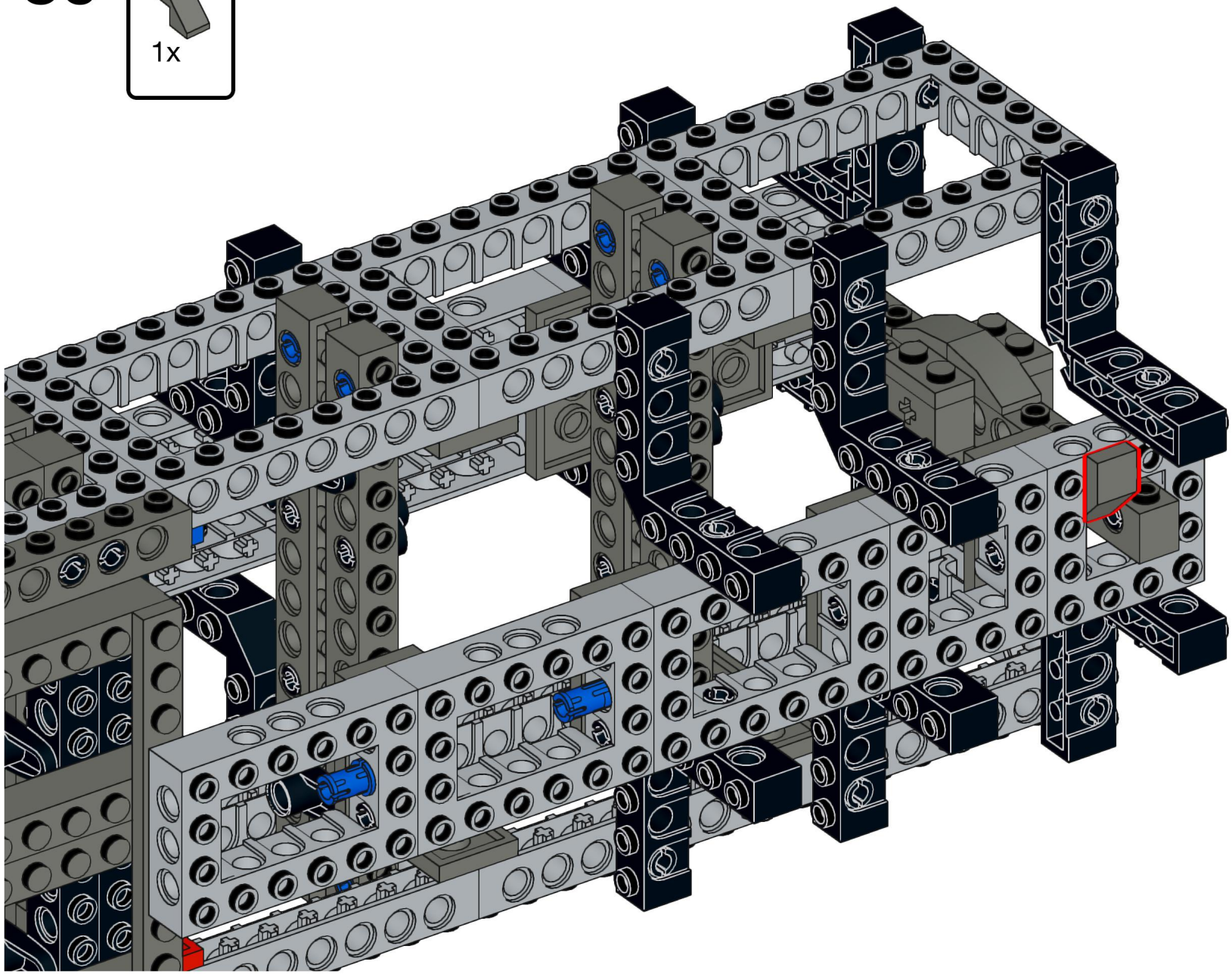

90

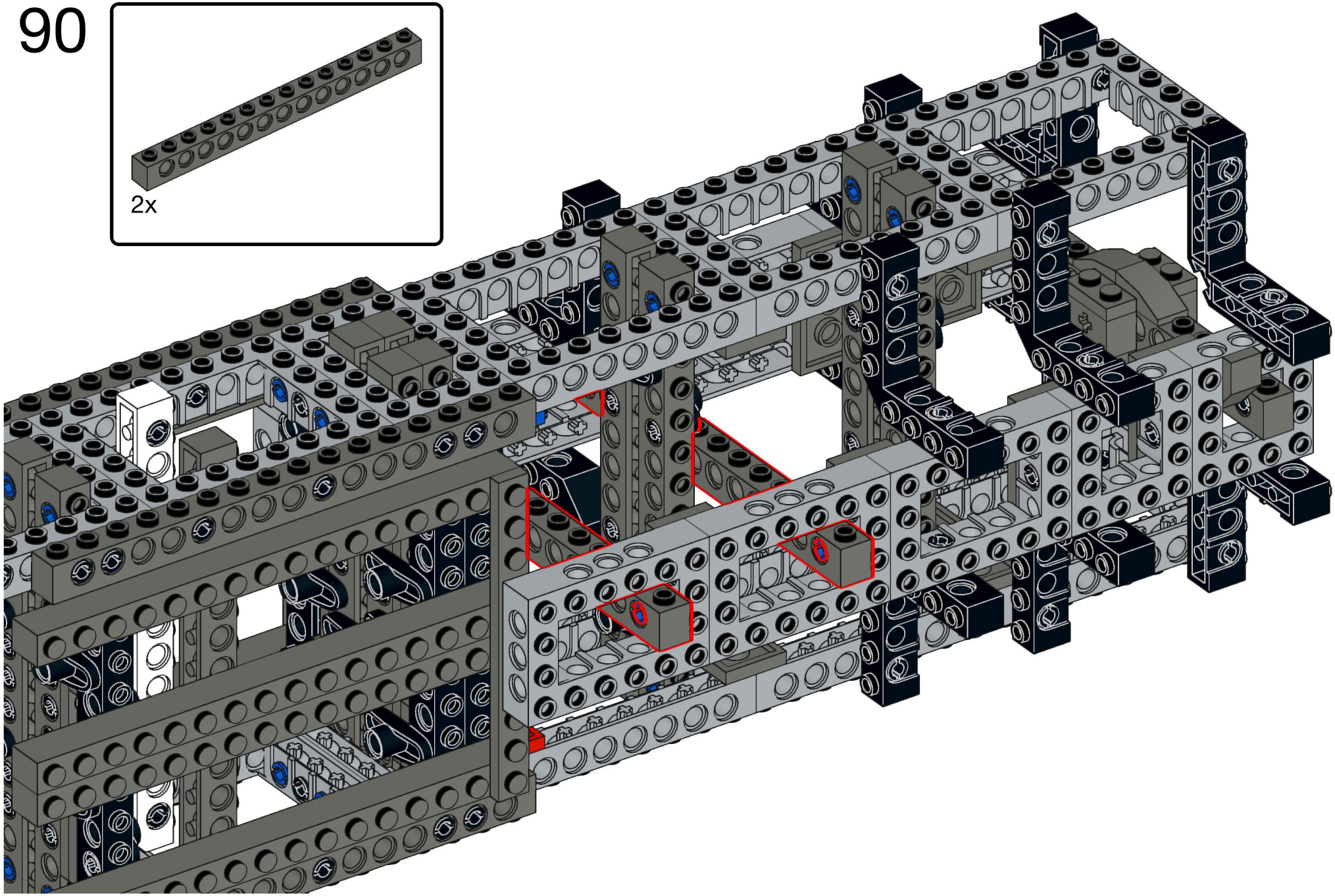

Designed by Michael Gertsch

91

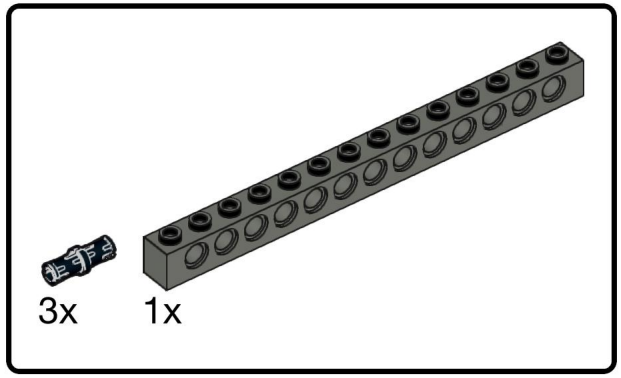

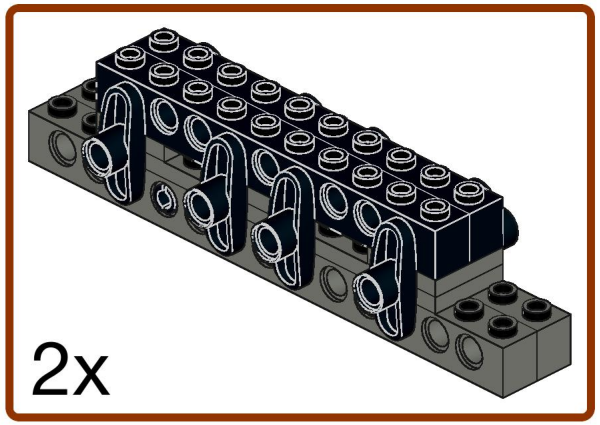

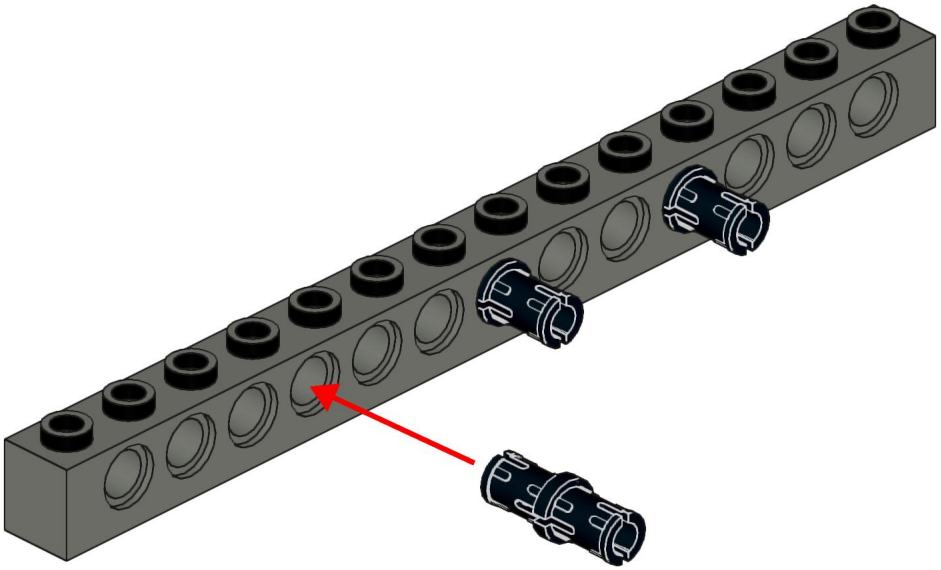

Designed by Michael Gertsch

92

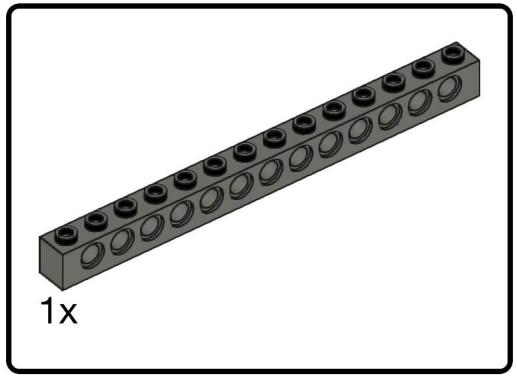

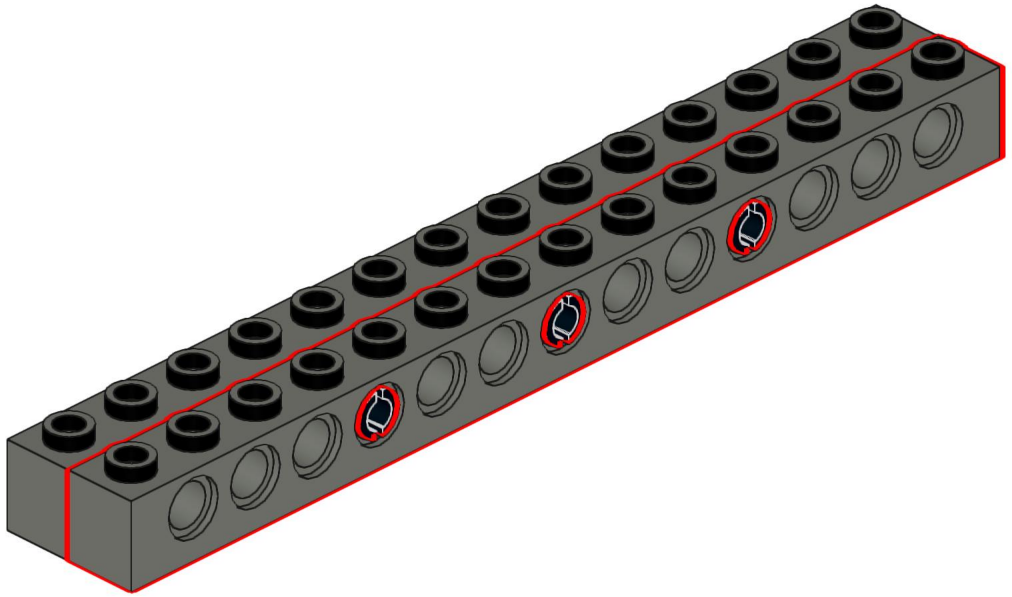

93

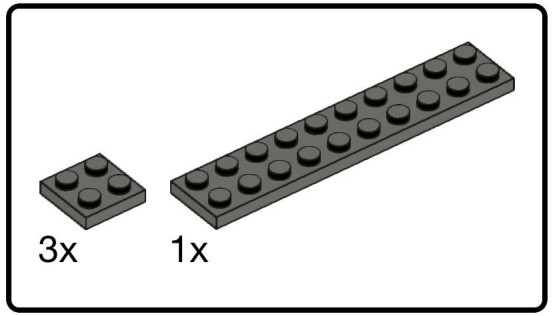

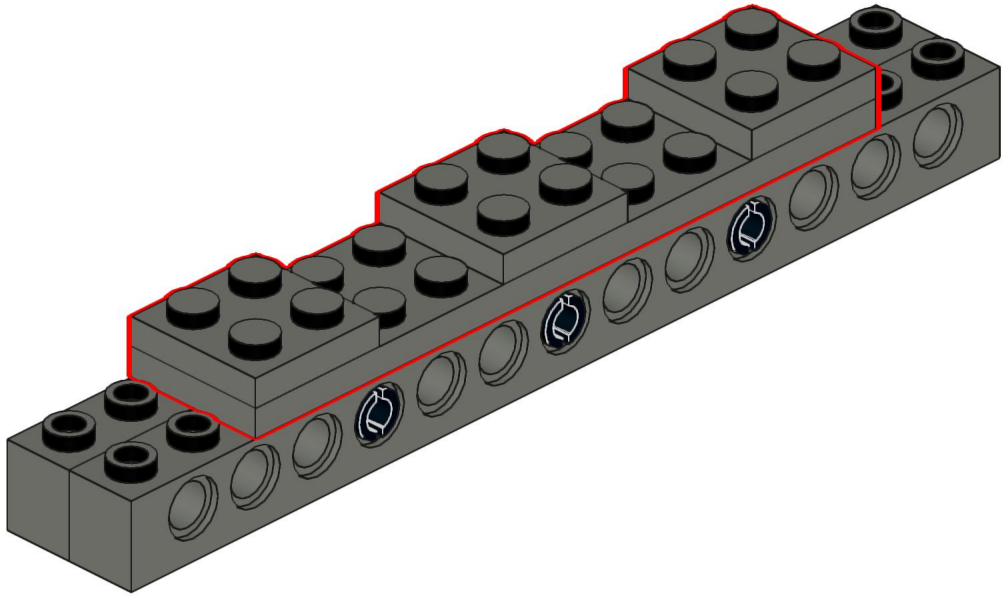

94

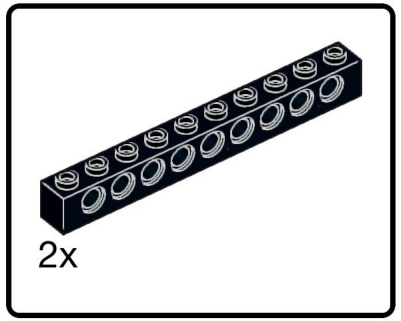

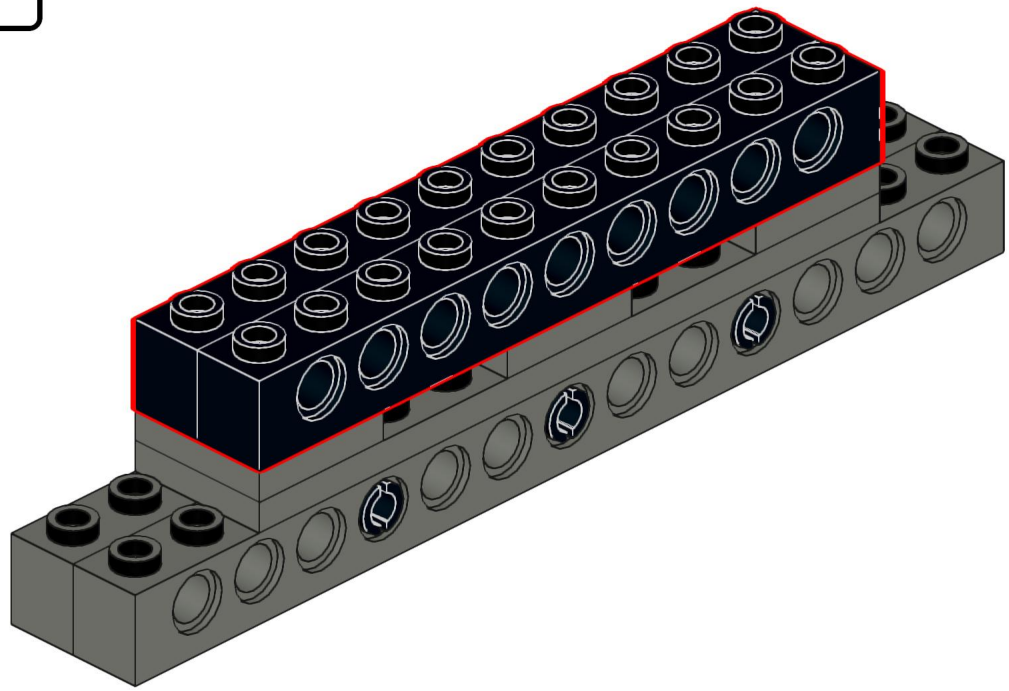

Designed by Michael Gertsch

95

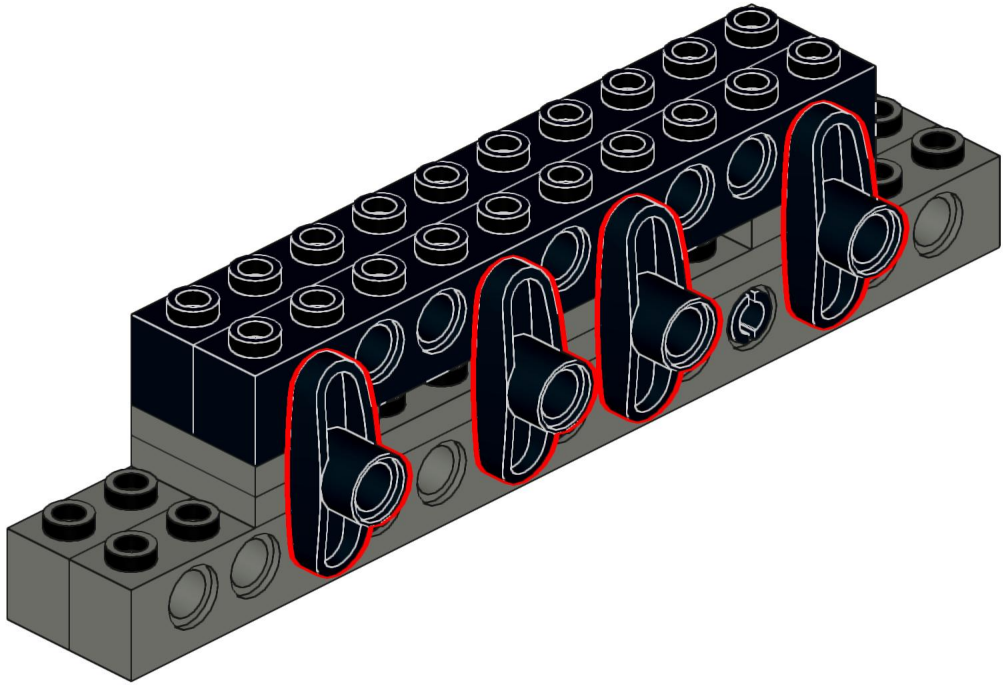

Designed by Michael Gertsch

96

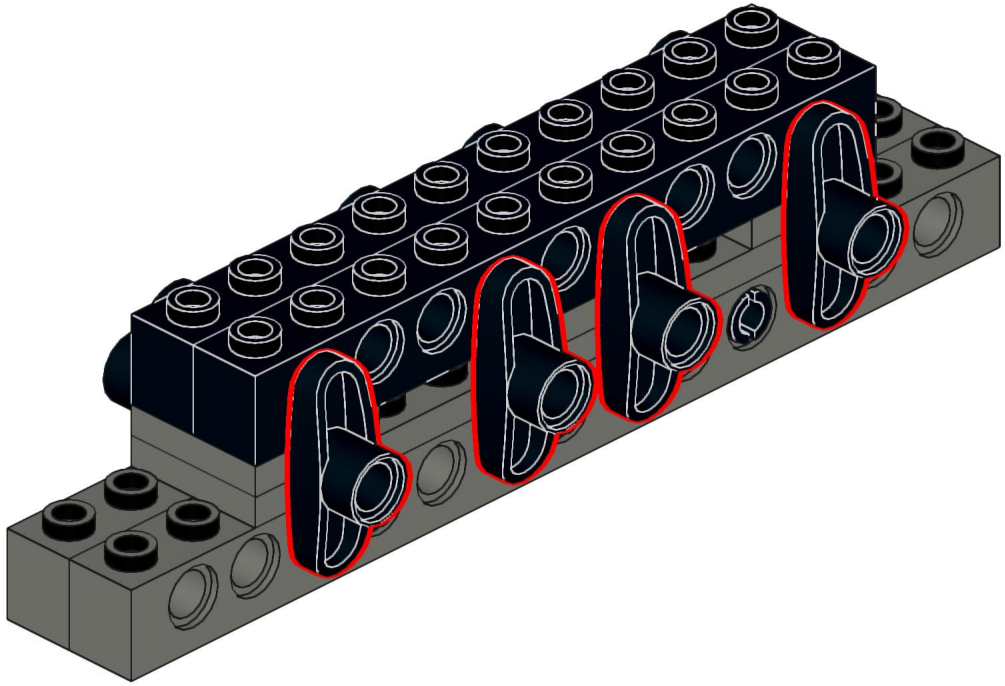

Designed by Michael Gertsch

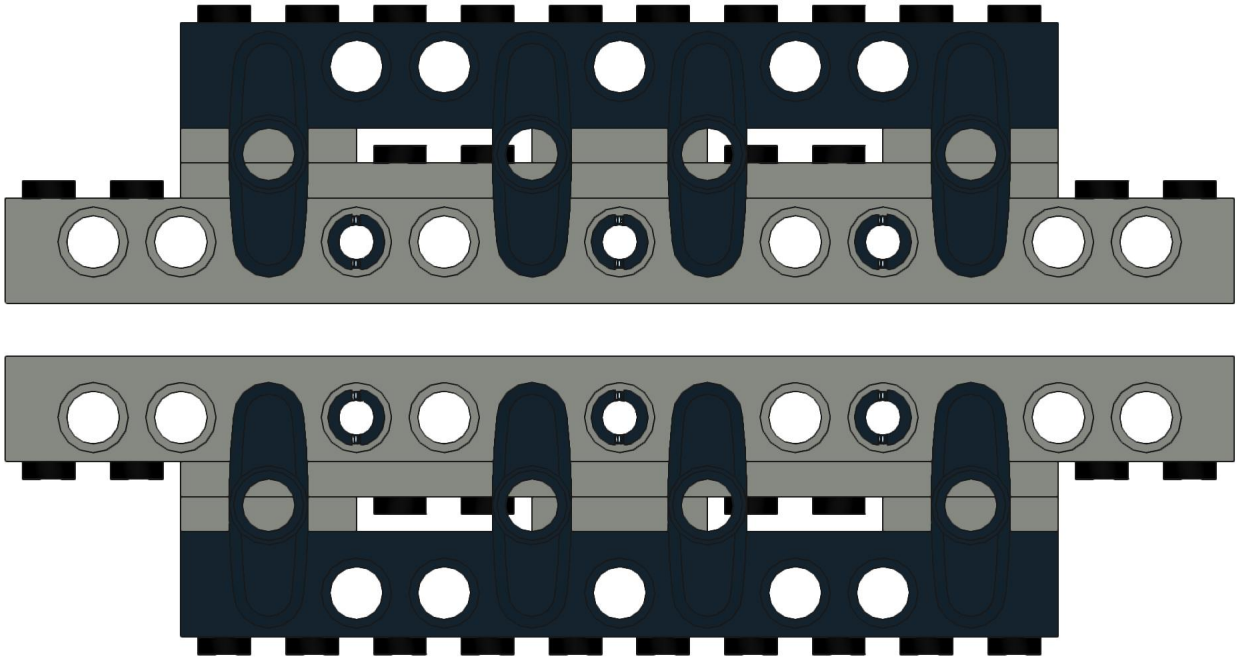

98

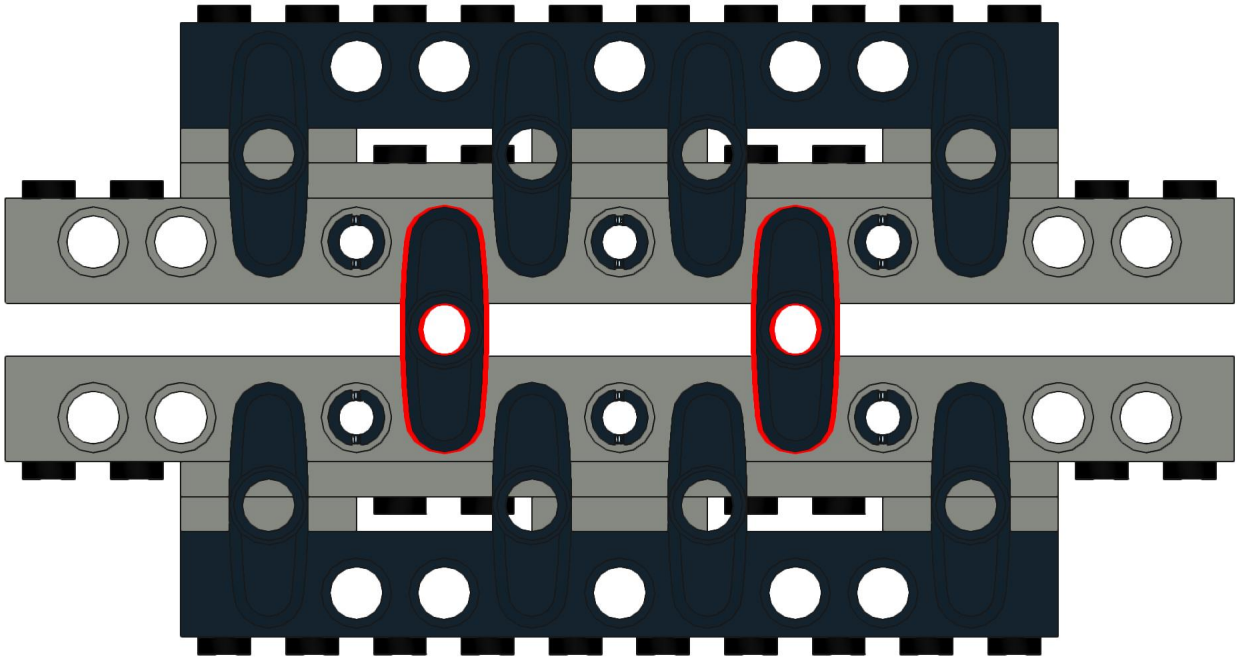

Designed by Michael Gertsch

99

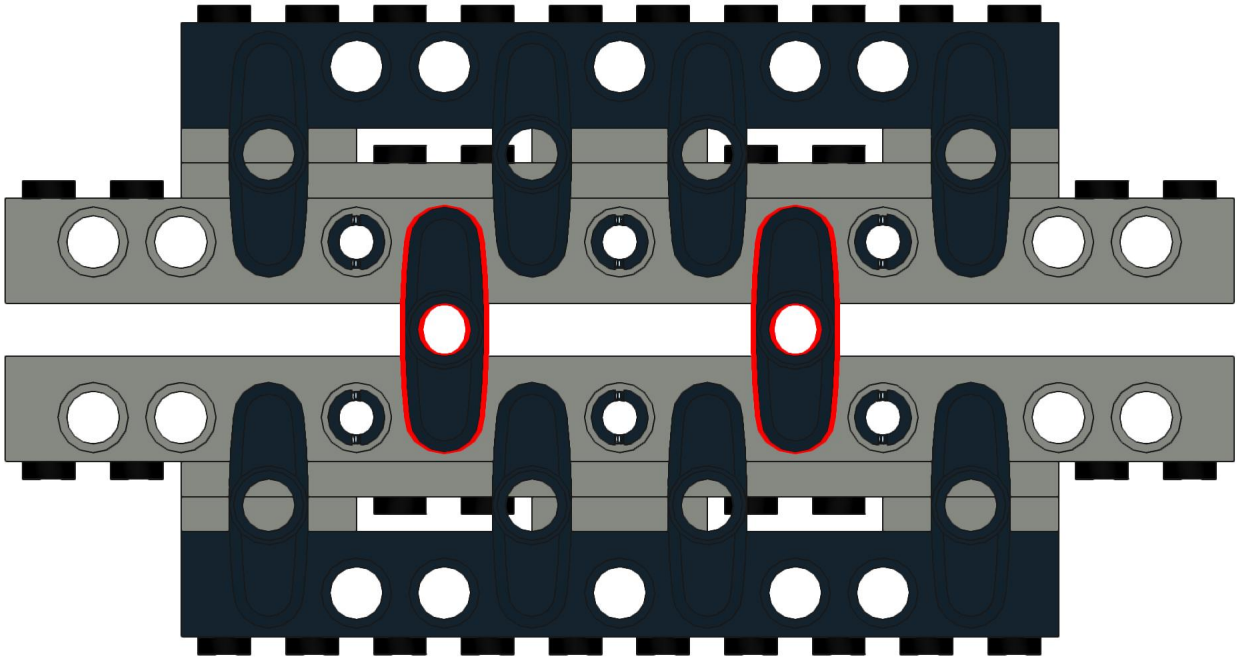

Designed by Michael Gertsch

100

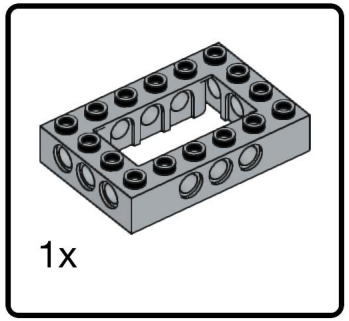

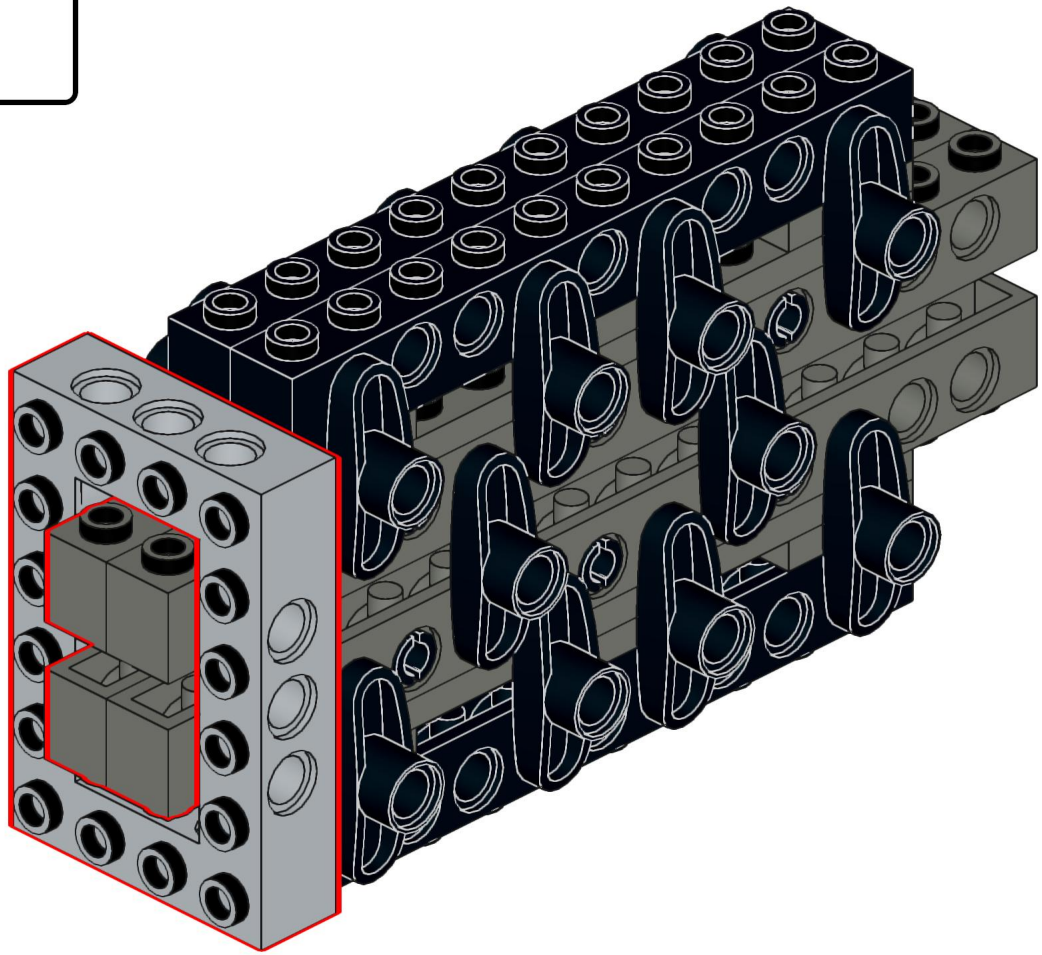

Designed by Michael Gertsch

101

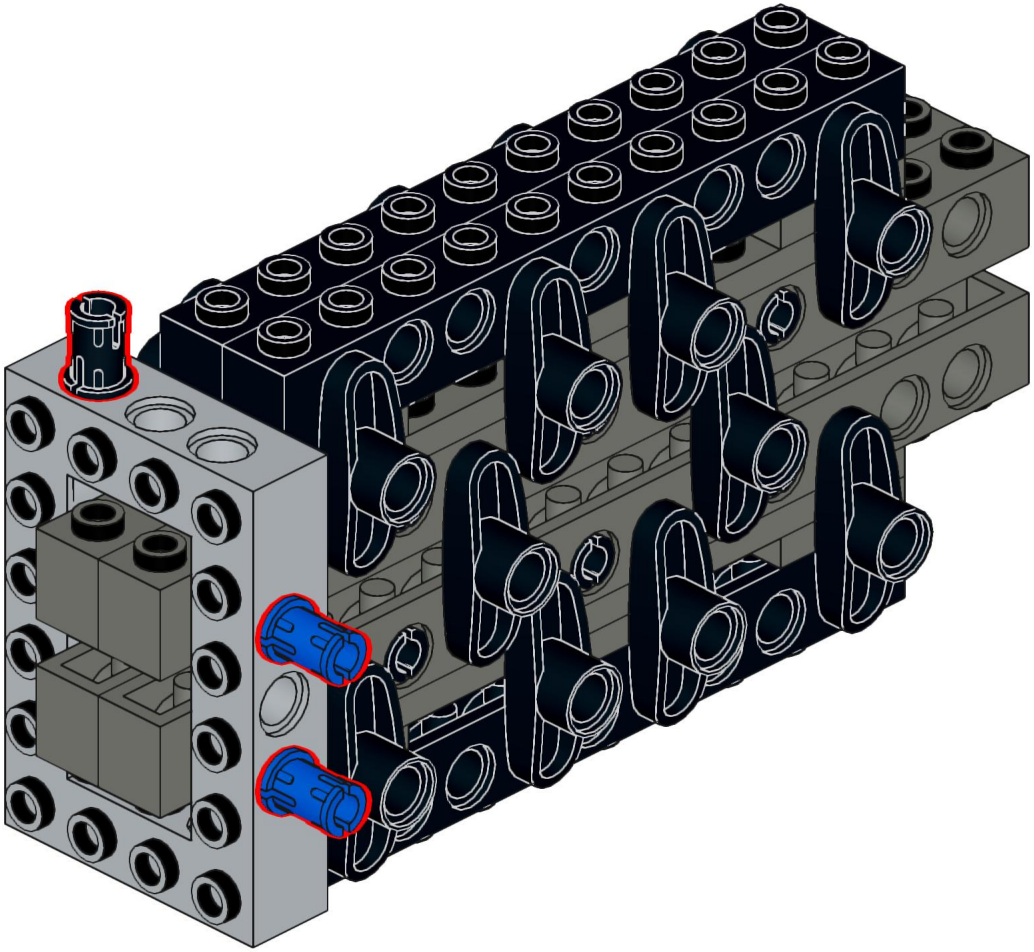

Designed by Michael Gertsch

102

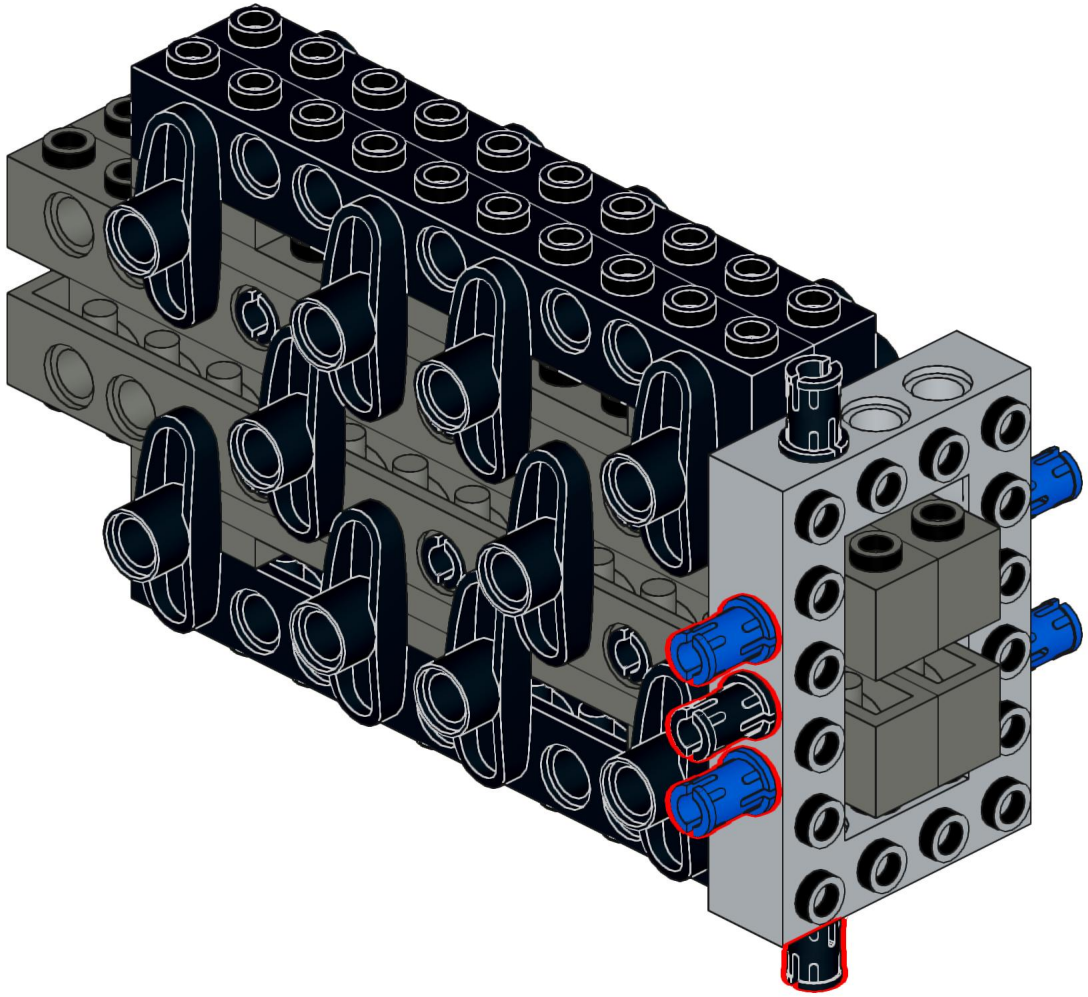

Designed by Michael Gertsch

103

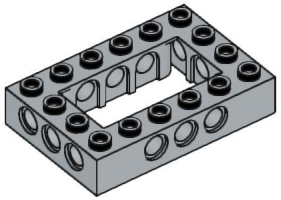

1x

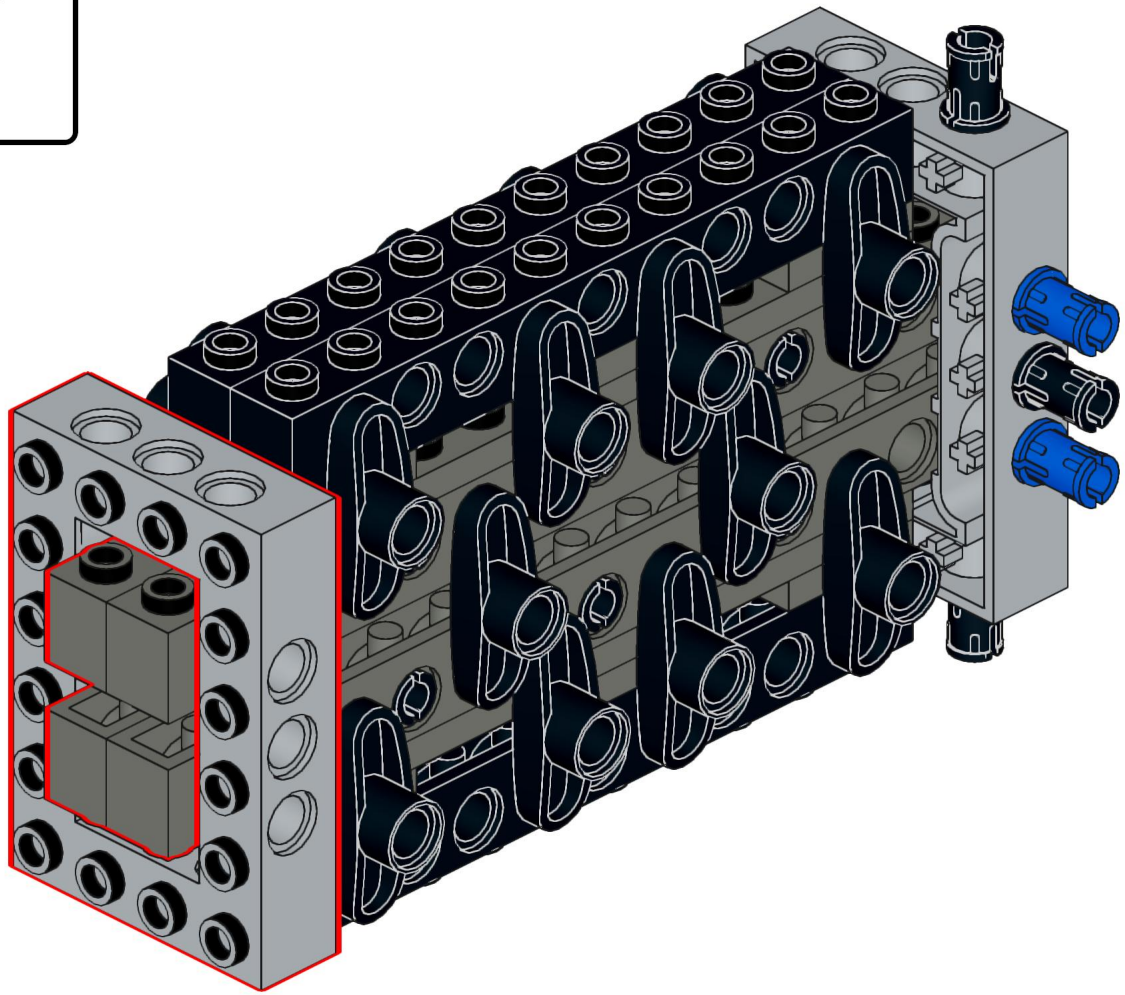

Designed by Michael Gertsch

104

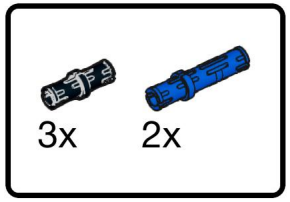

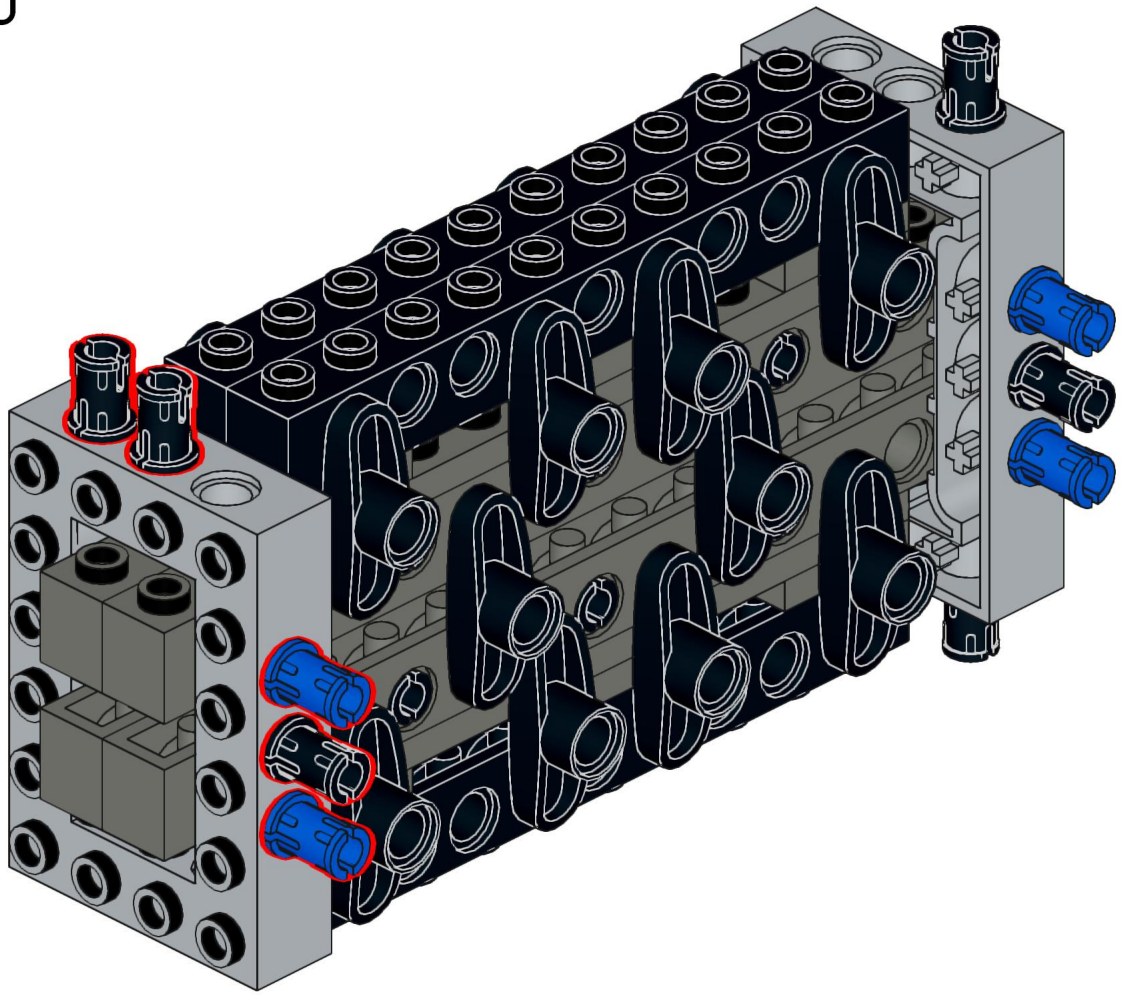

Designed by Michael Gertsch

105

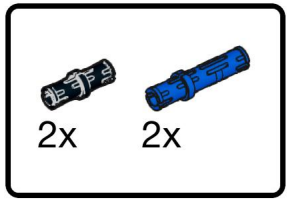

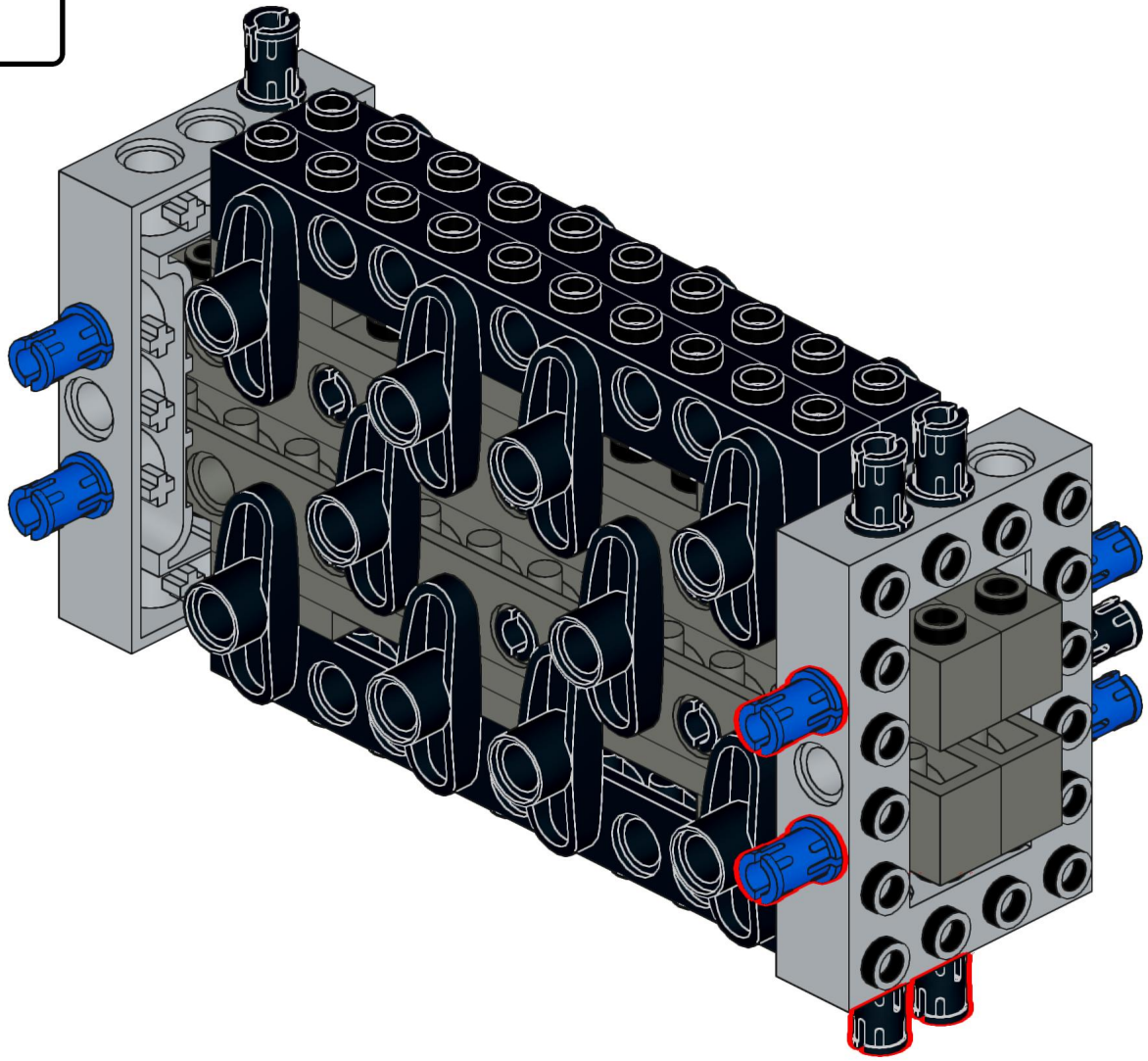

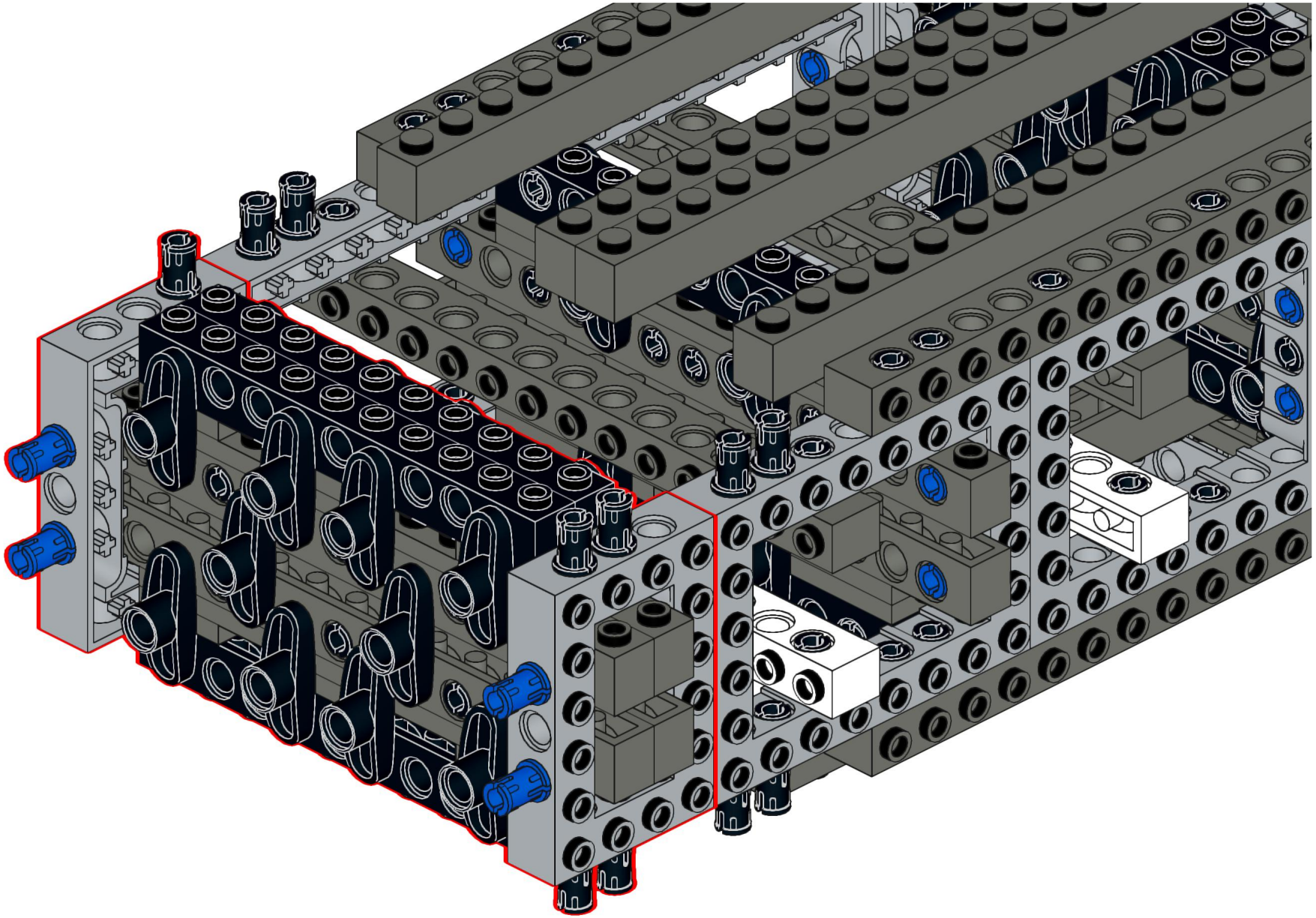

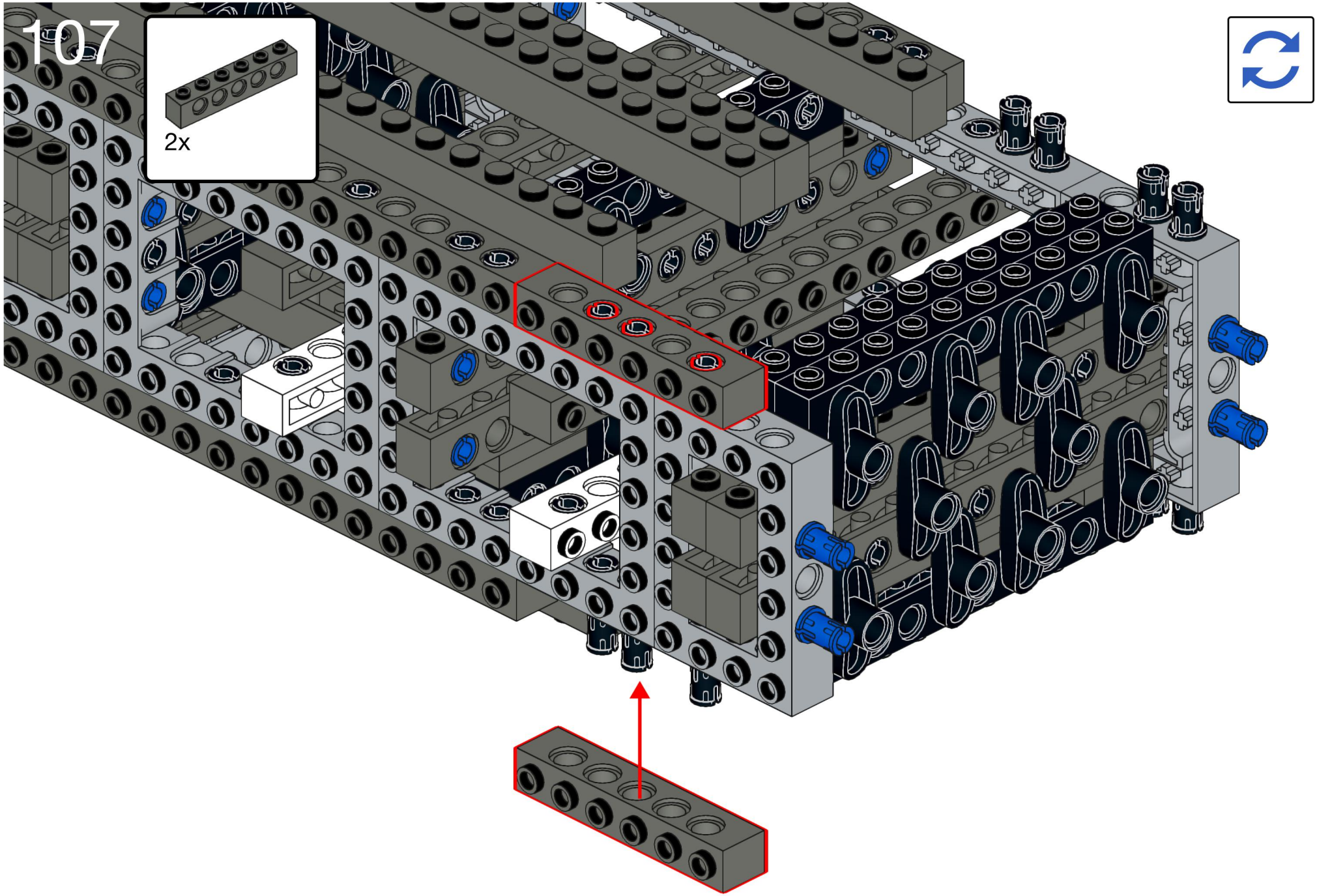

Designed by Michael Gertsch

108

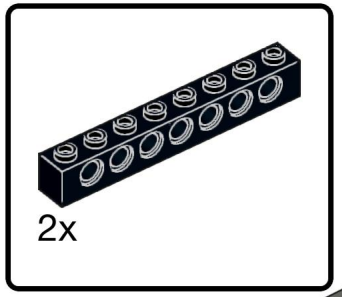

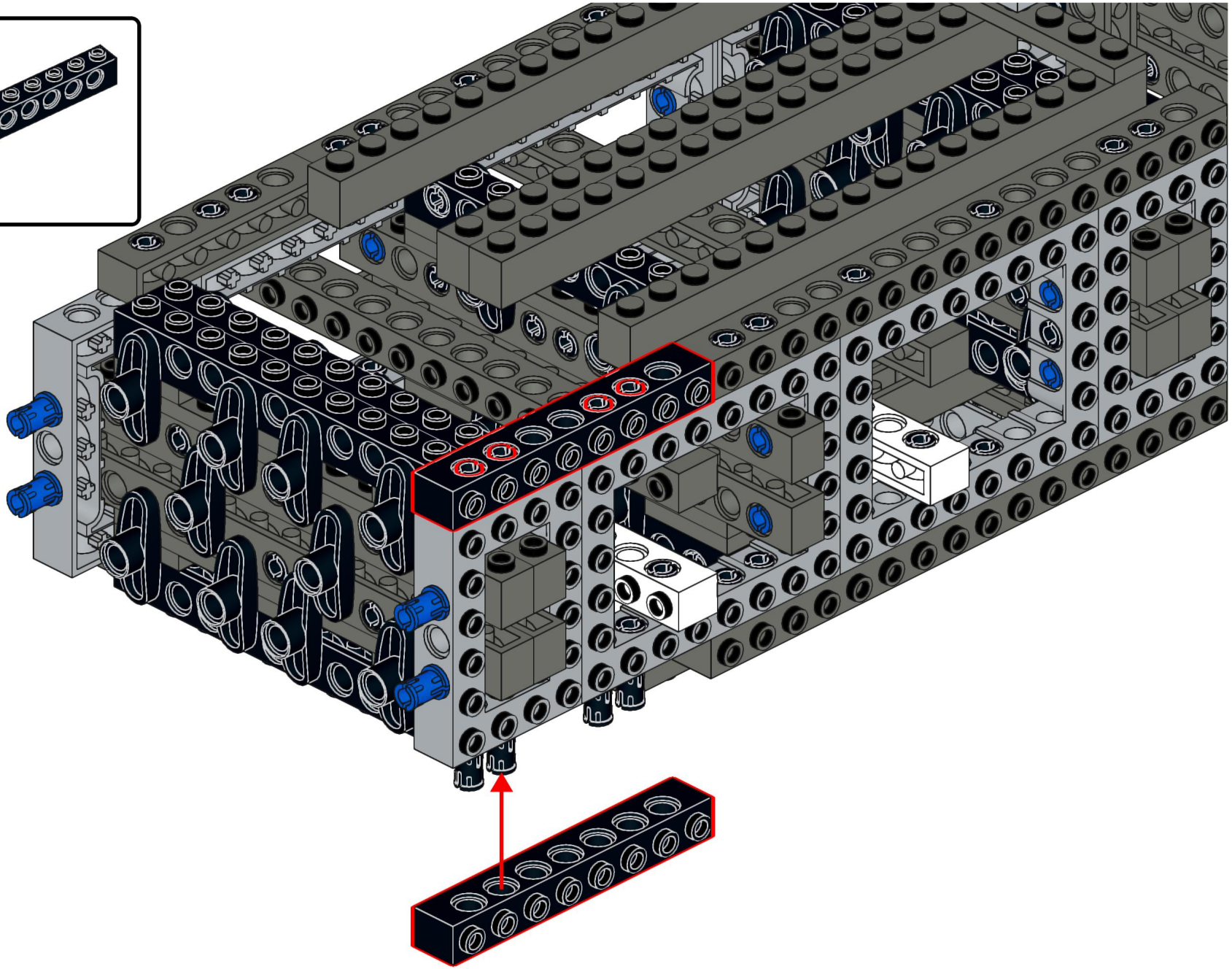

Designed by Michael Gertsch

109

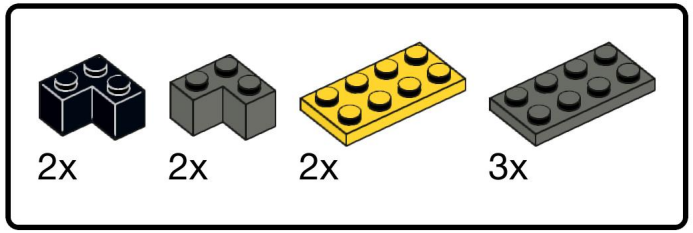

Watch for the blue and red plate 2x6, they show you from which side you are looking

Designed by Michael Gertsch

110

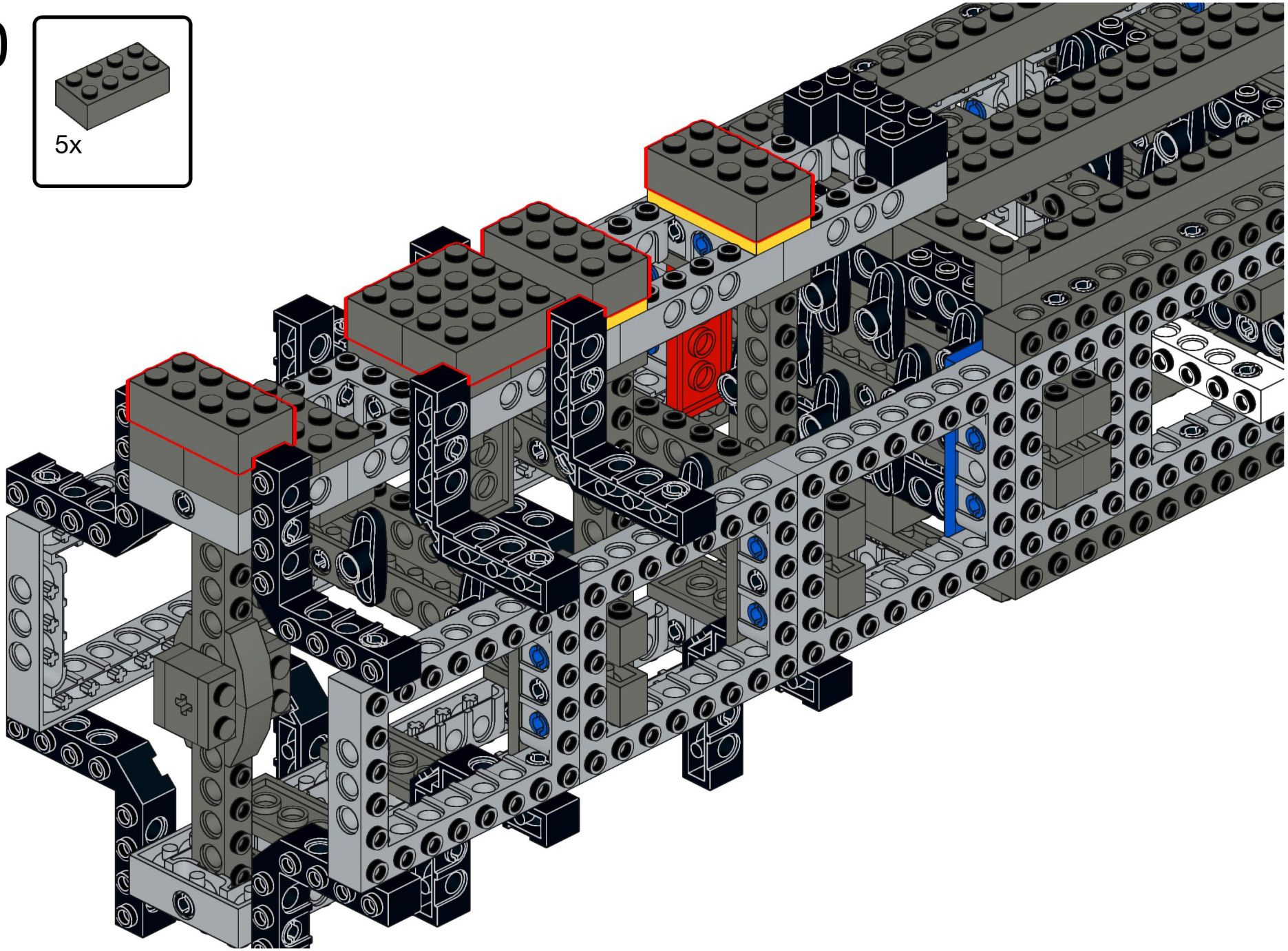

Designed by Michael Gertsch

111

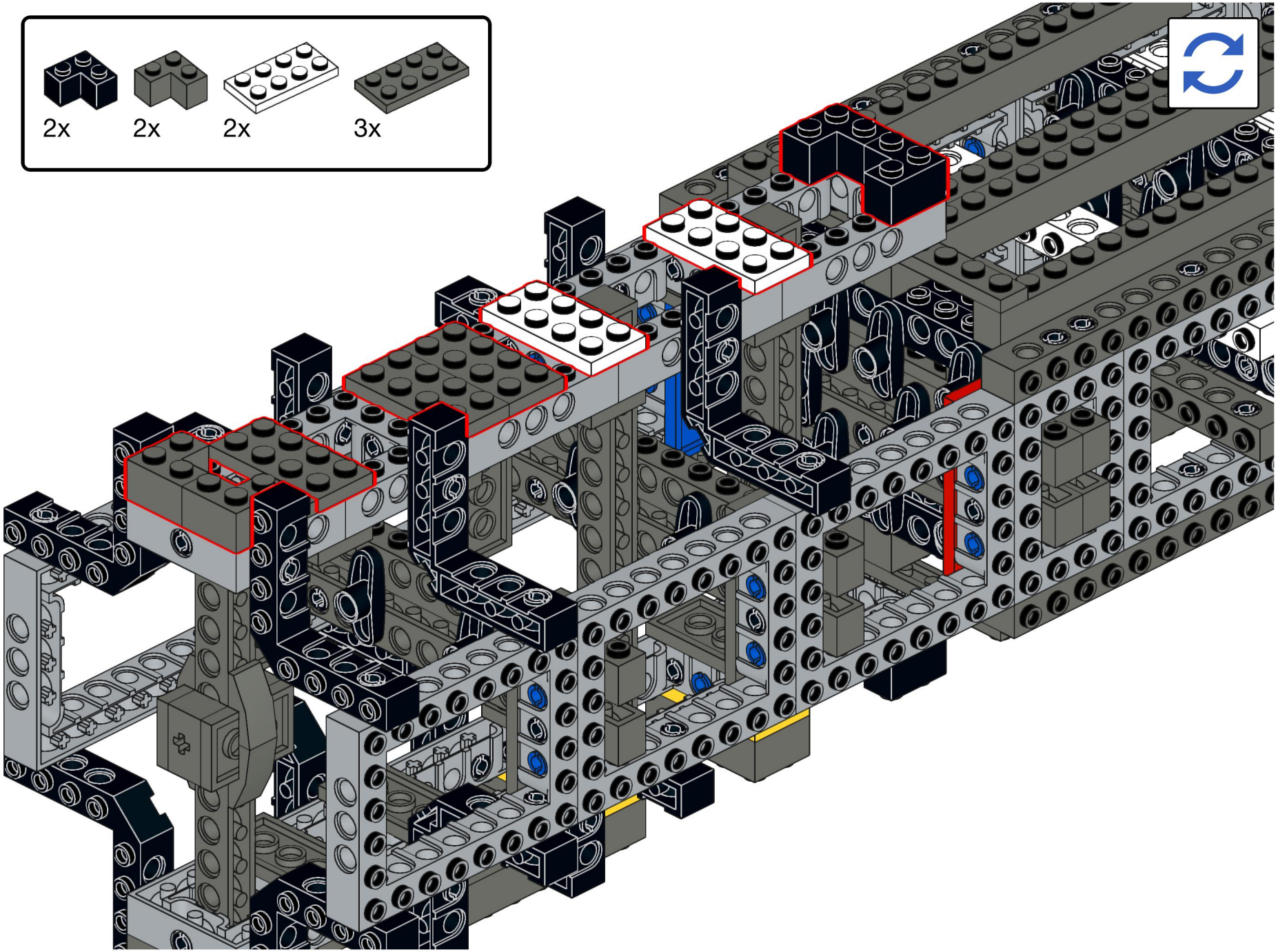

Designed by Michael Gertsch

112

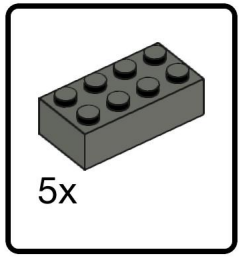

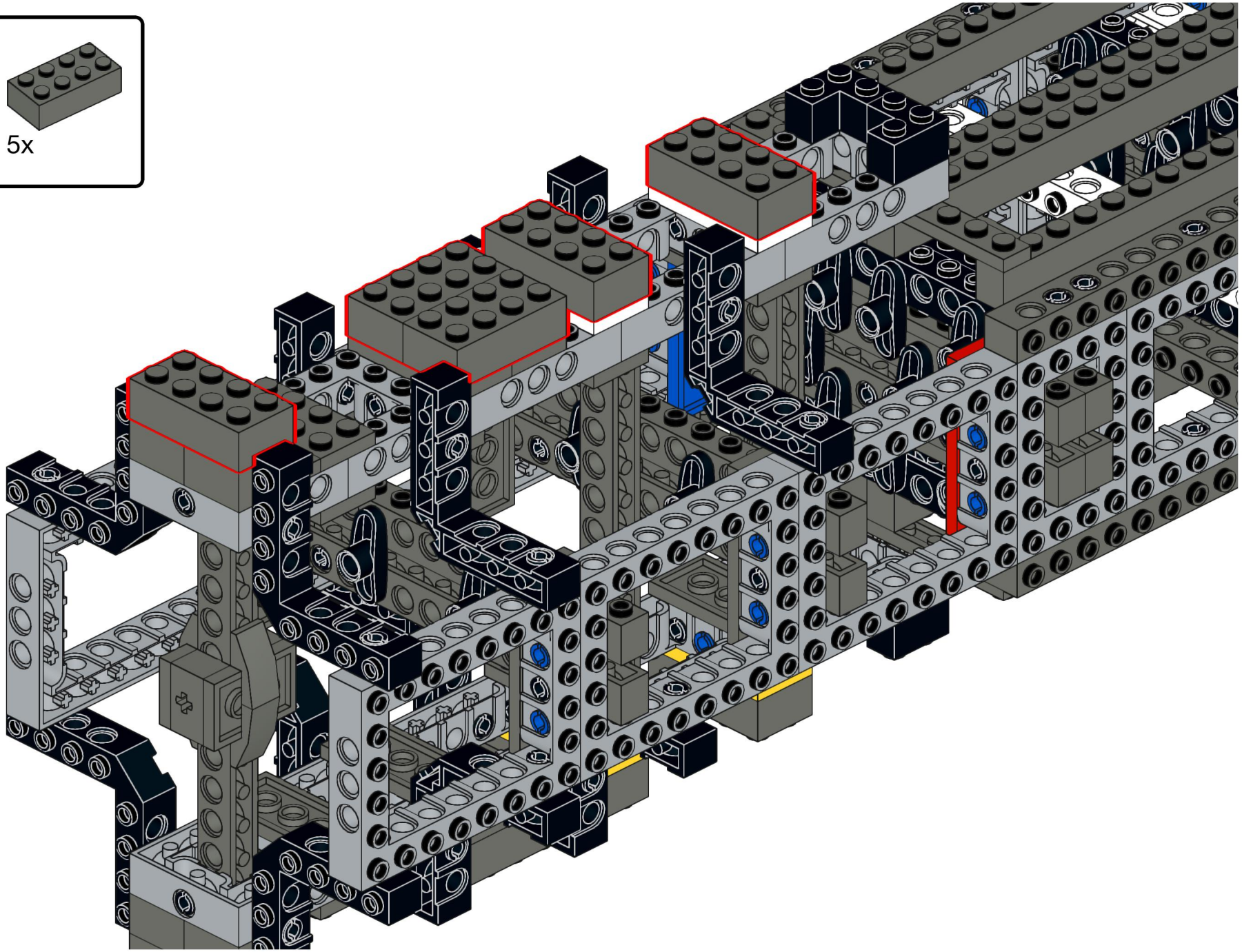

Designed by Michael Gertsch

113

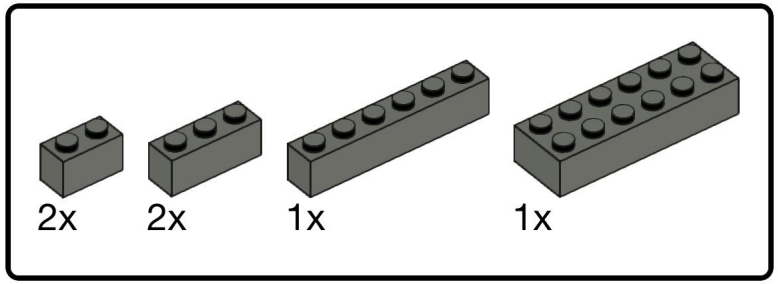

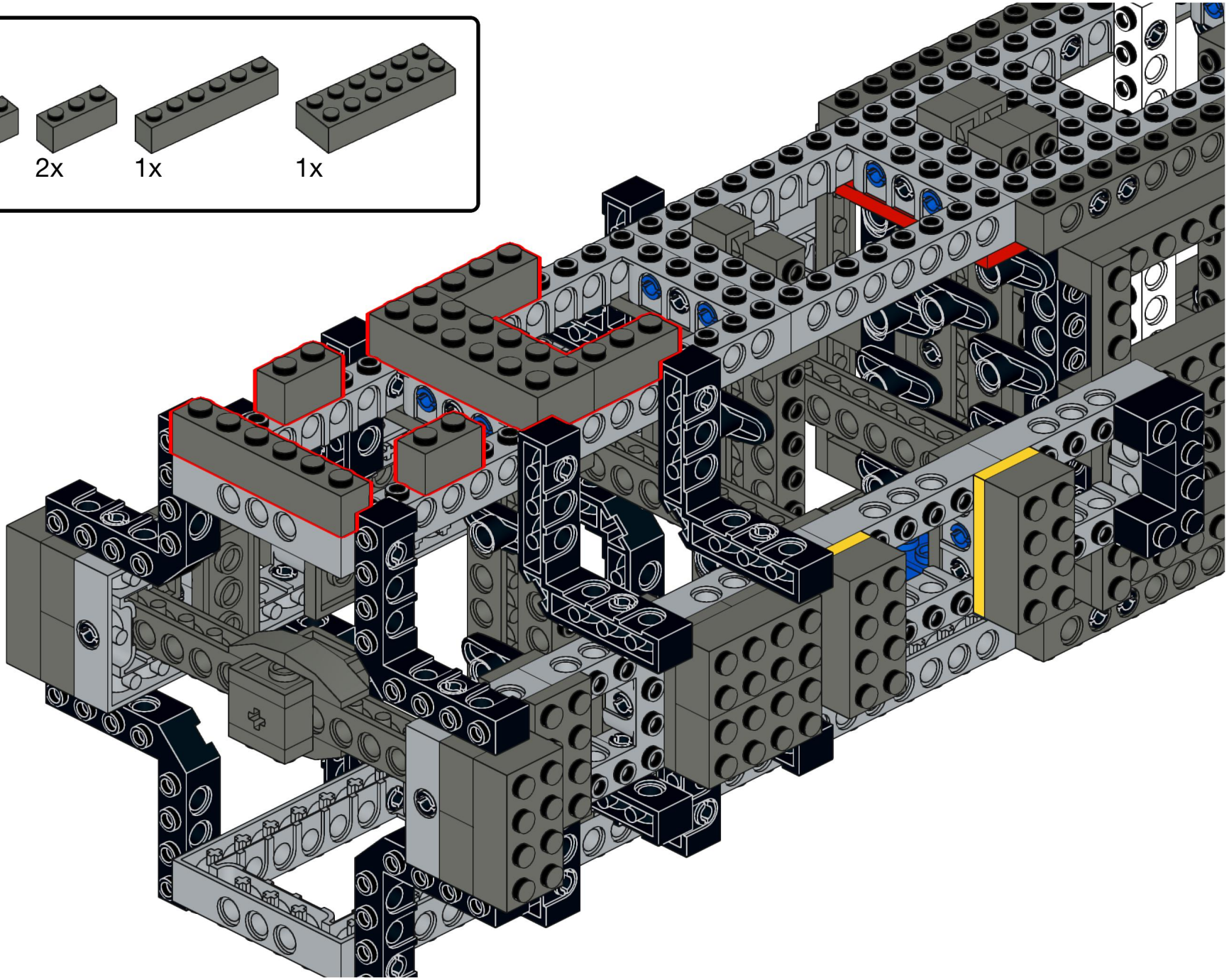

Designed by Michael Gertsch

114

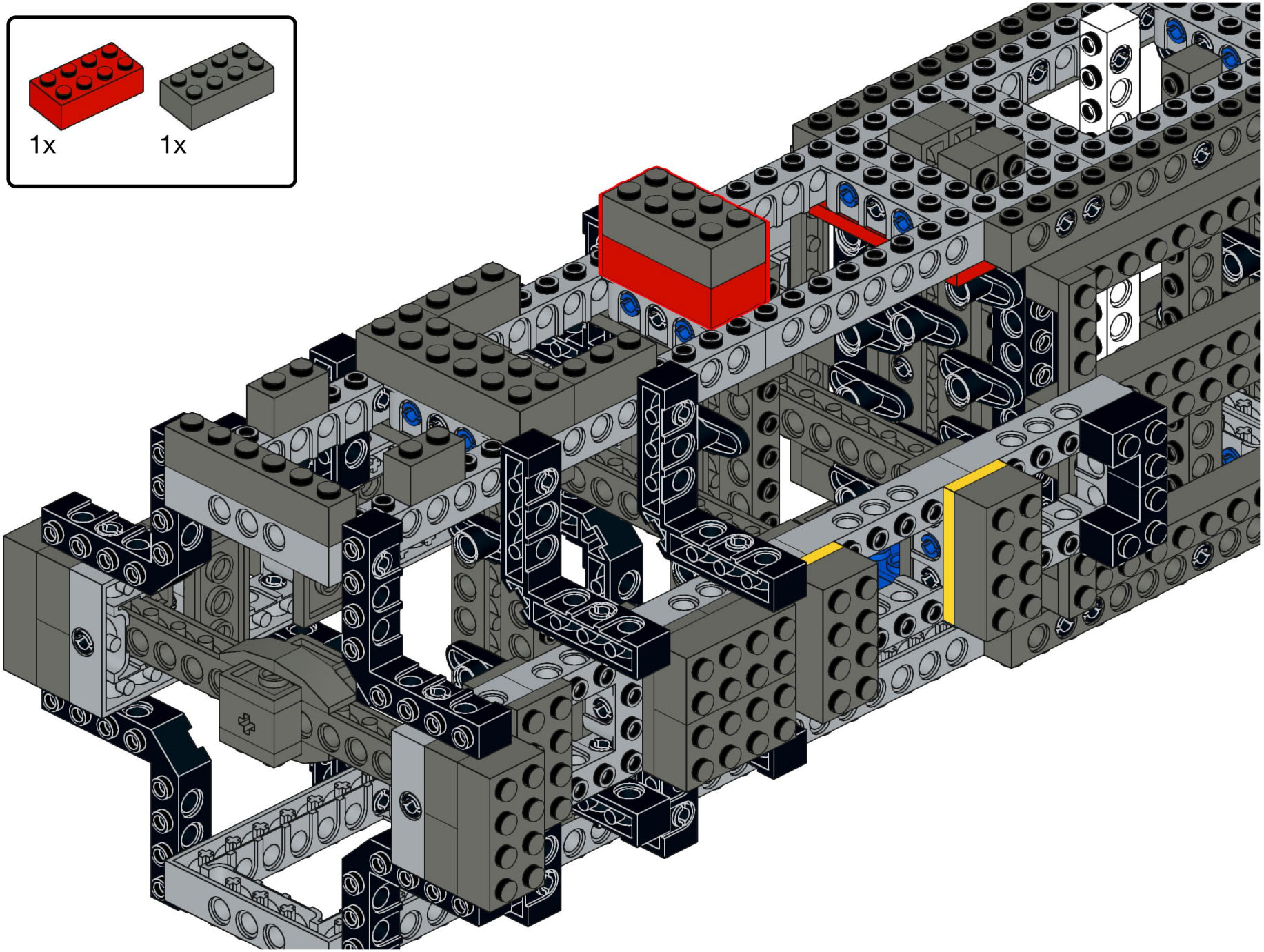

Designed by Michael Gertsch

115

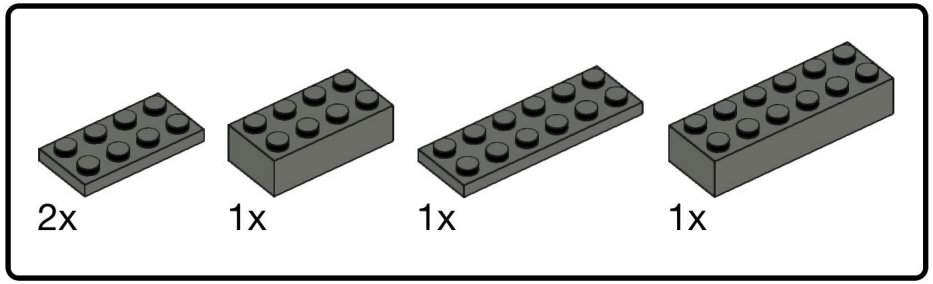

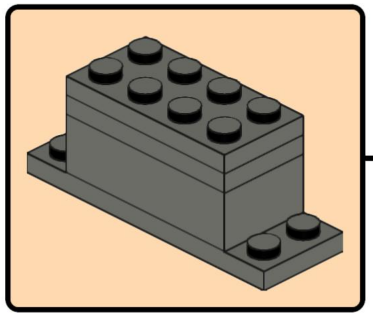

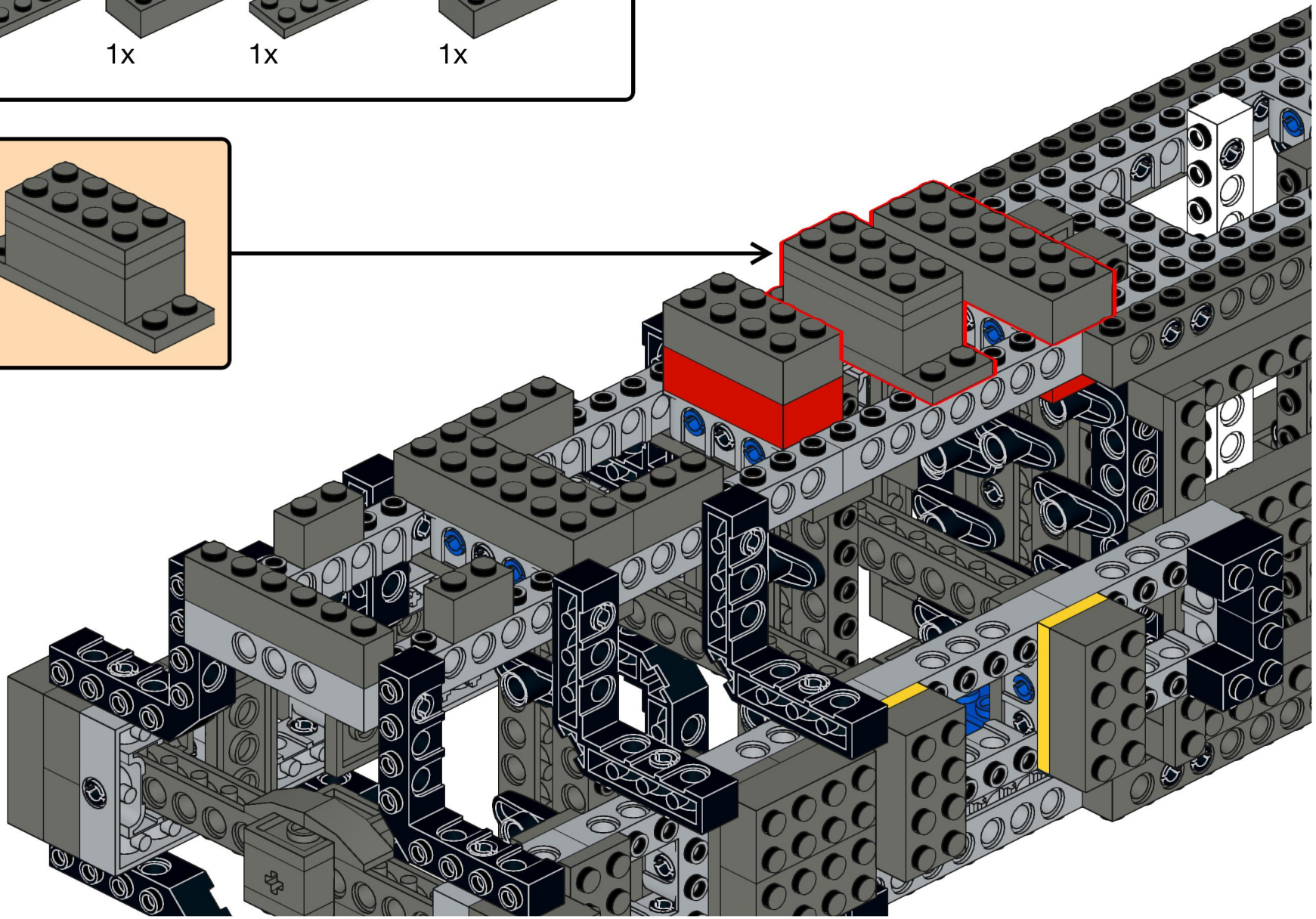

Designed by Michael Gertsch

116

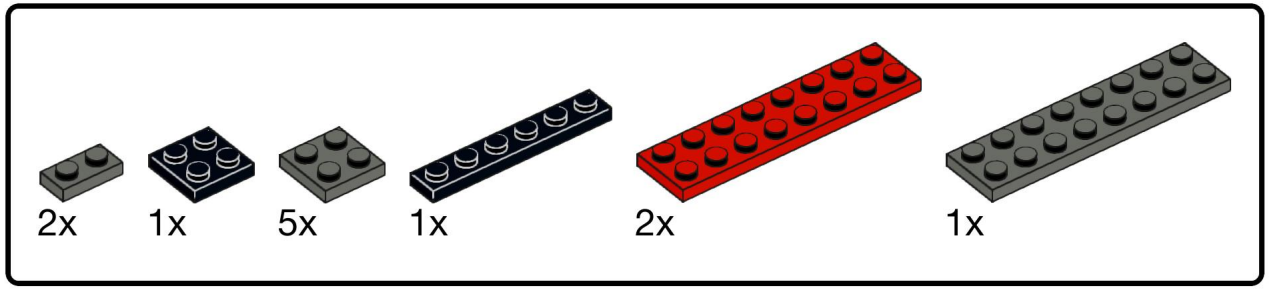

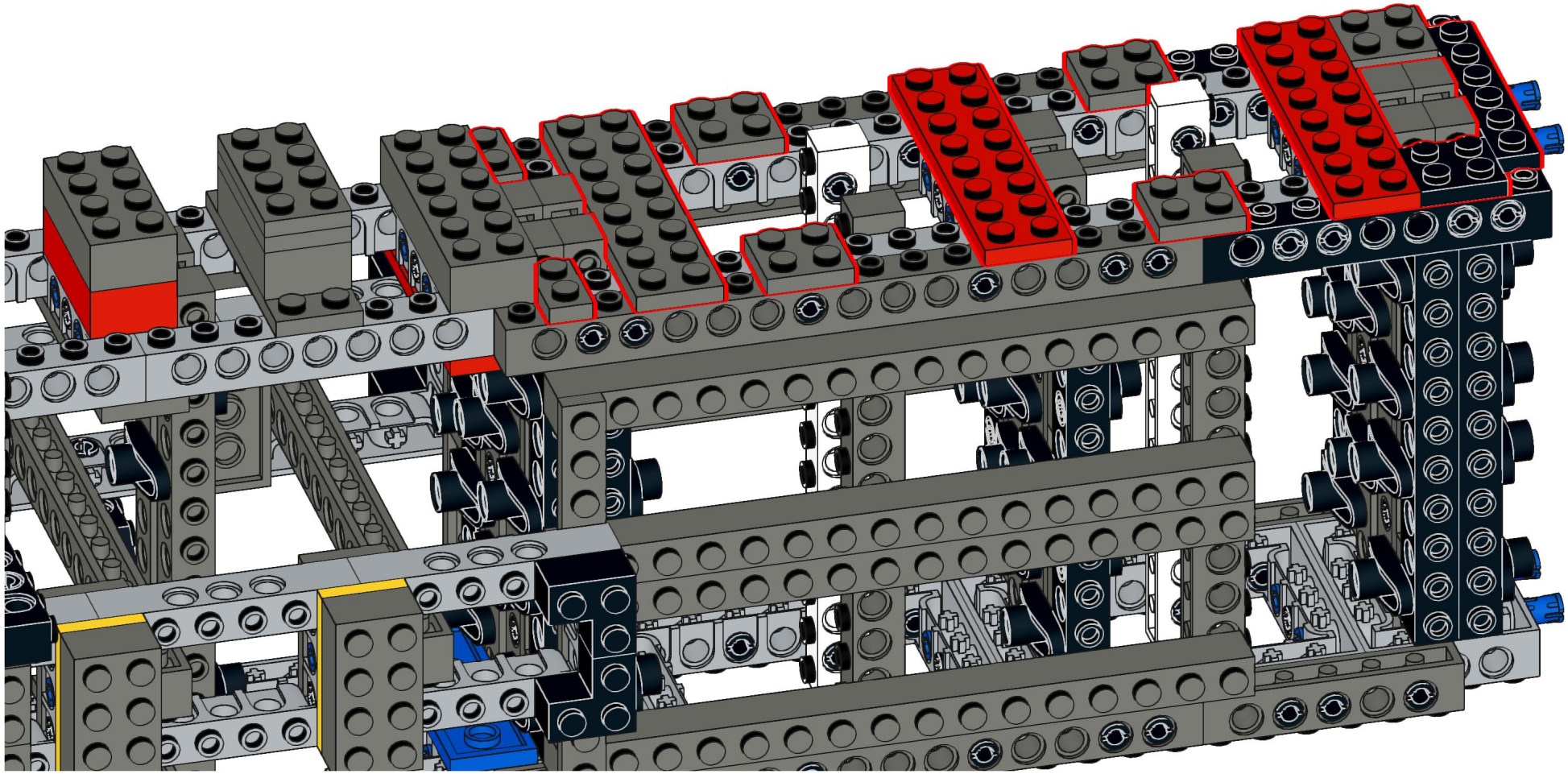

Designed by Michael Gertsch

117

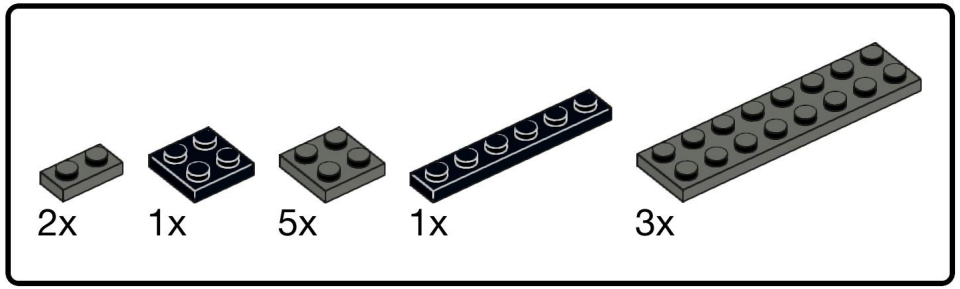

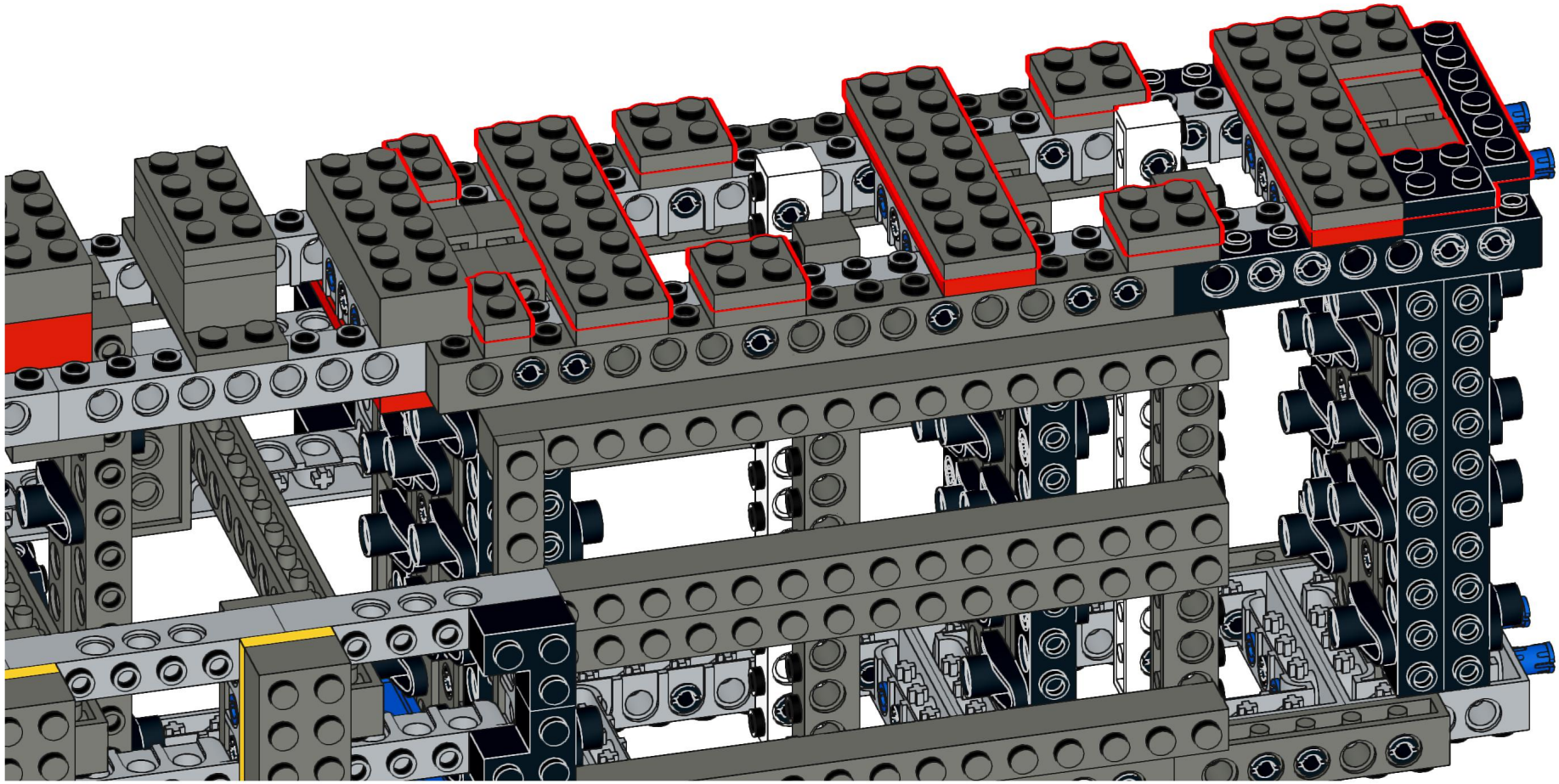

Designed by Michael Gertsch

118

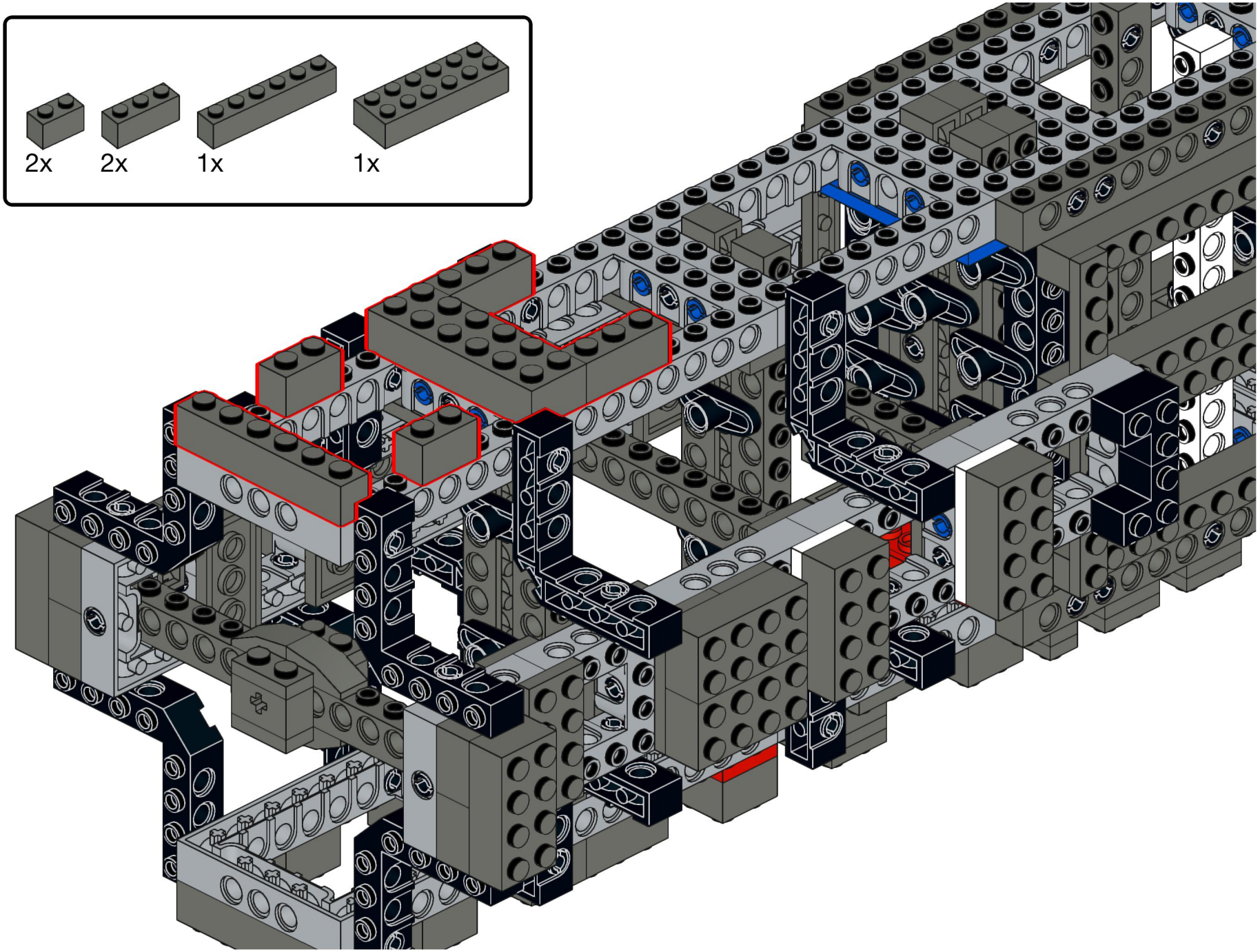

Designed by Michael Gertsch

119

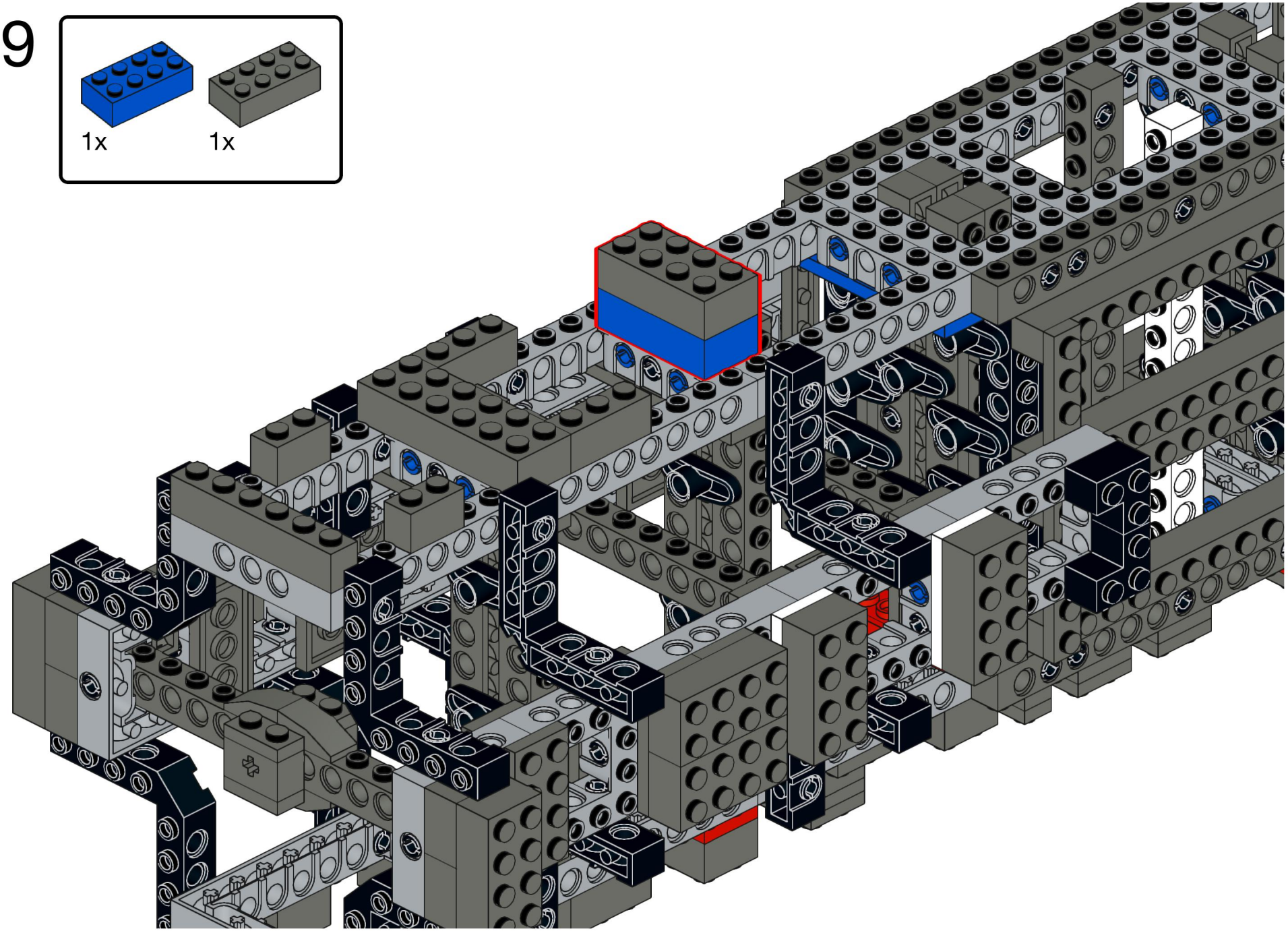

Designed by Michael Gertsch

120

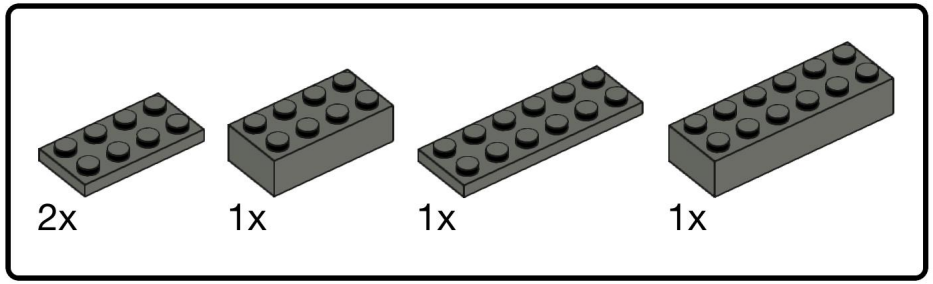

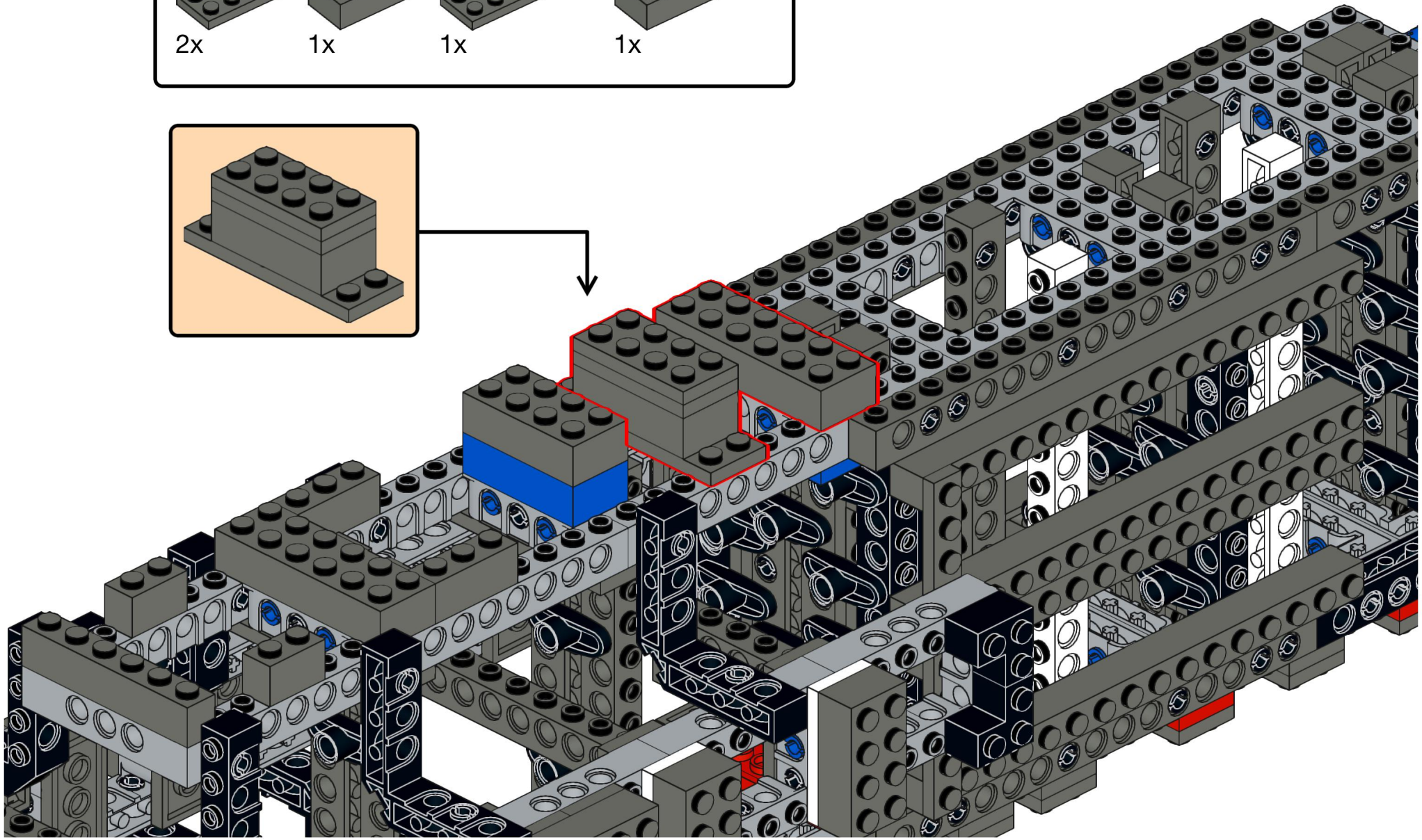

Designed by Michael Gertsch

121

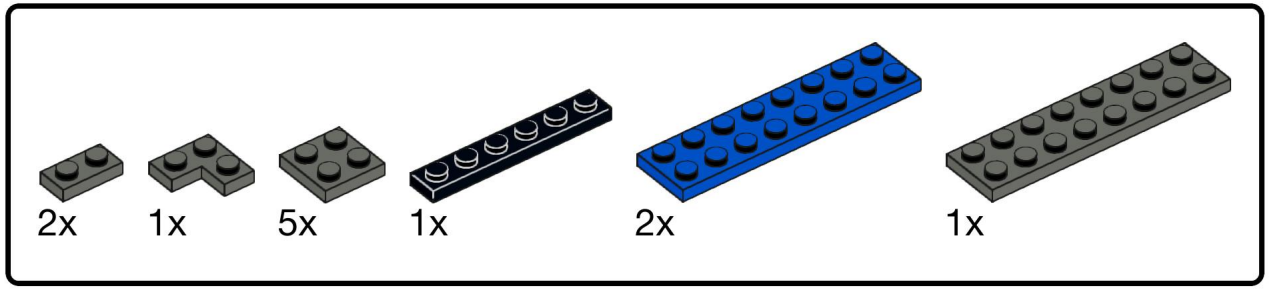

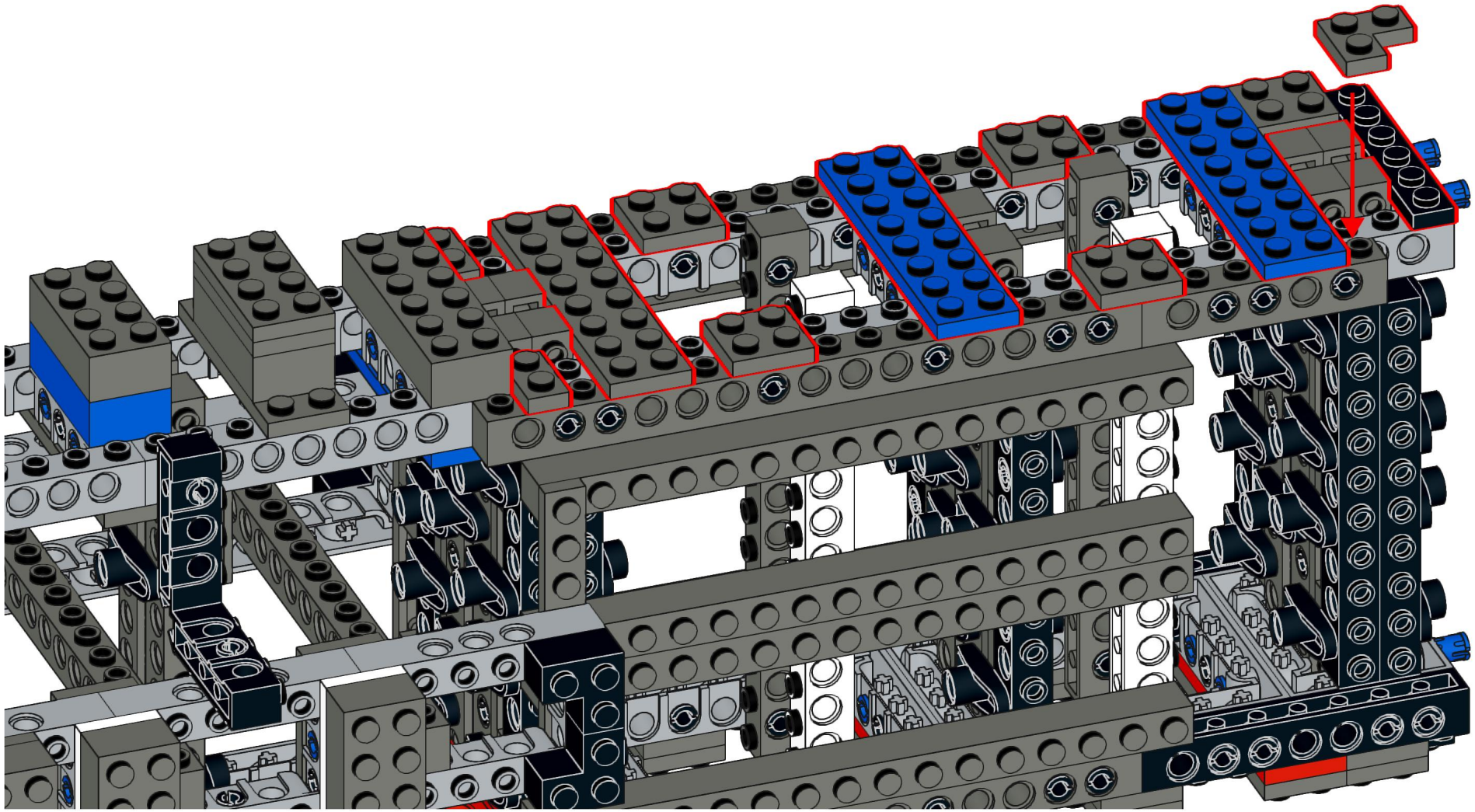

Designed by Michael Gertsch

122

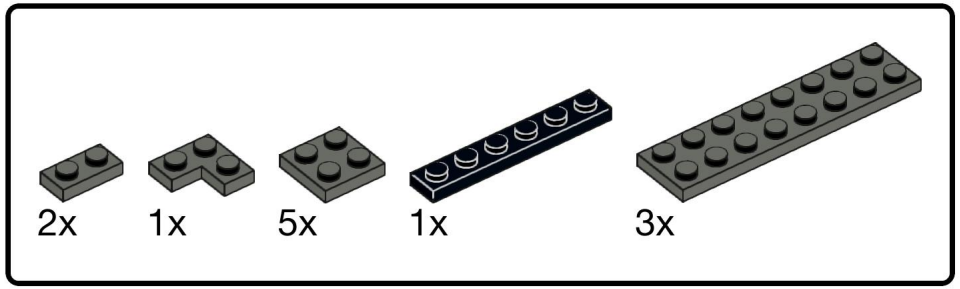

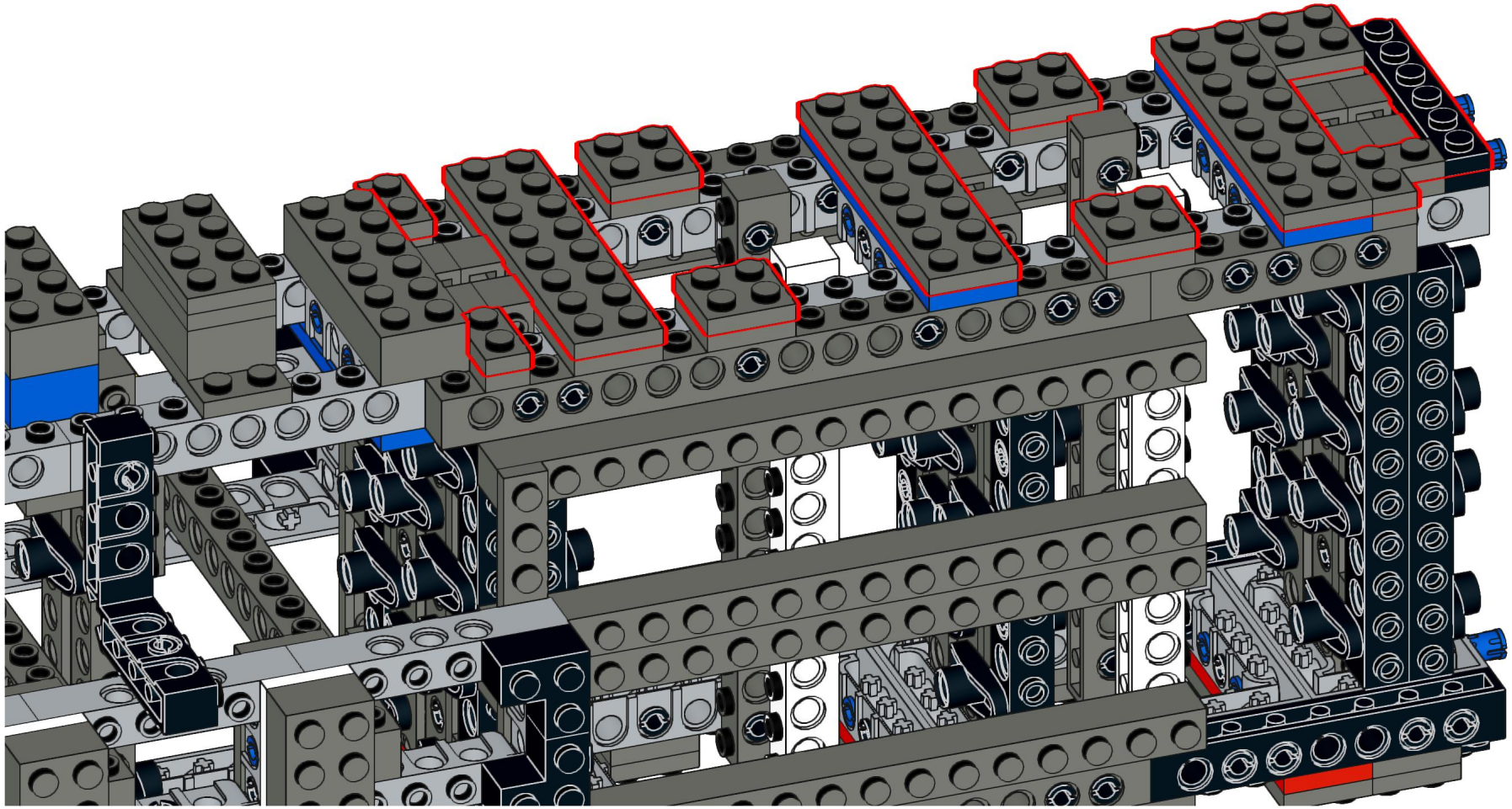

Designed by Michael Gertsch

123

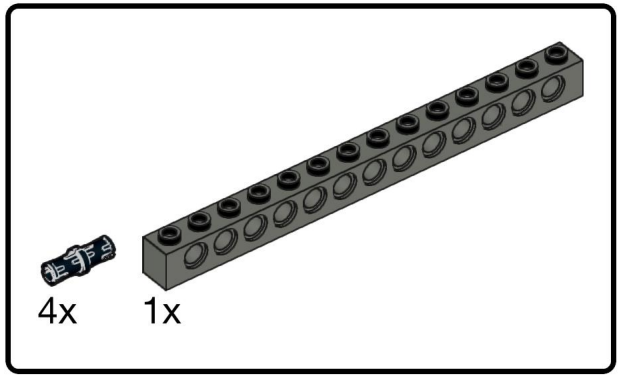

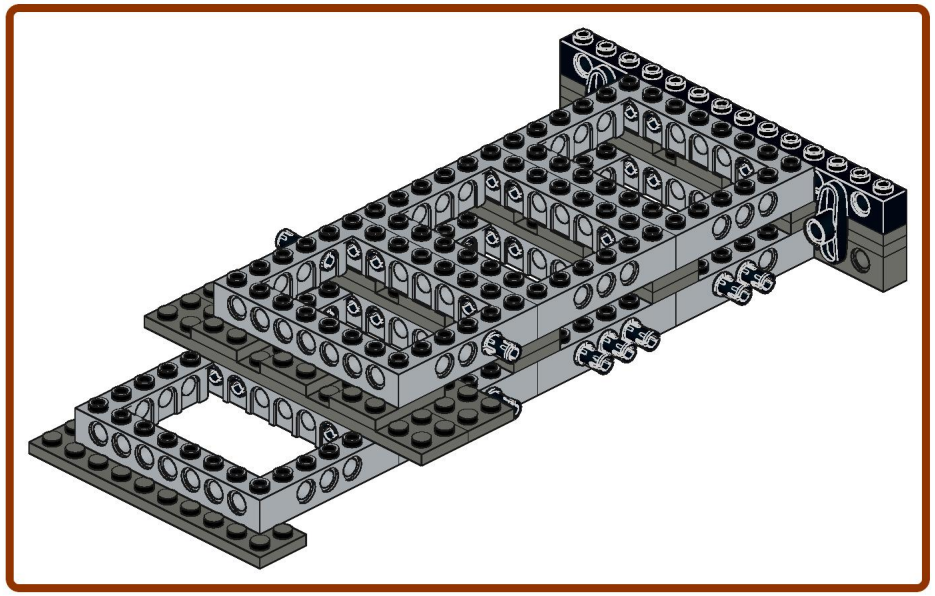

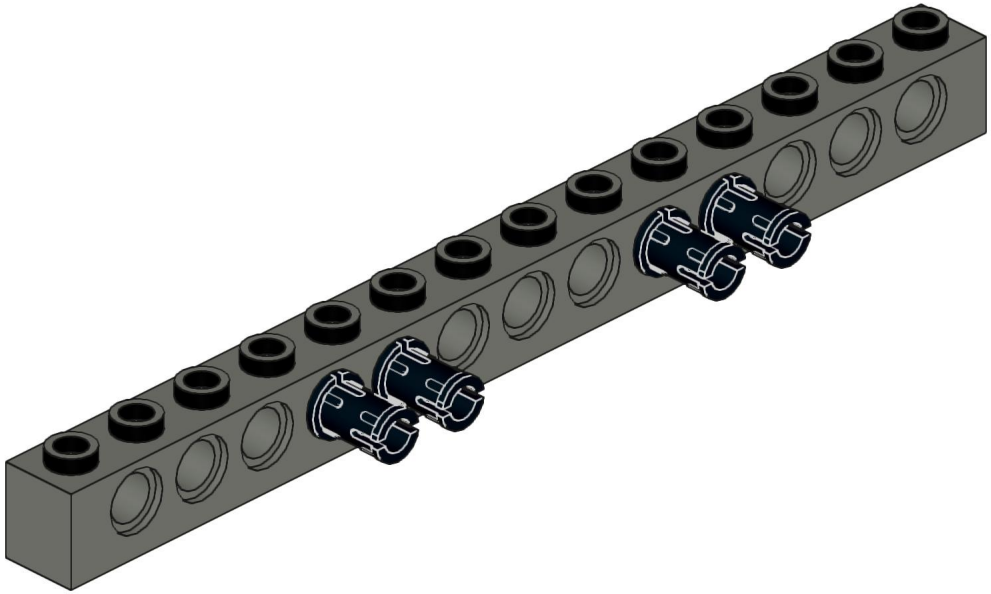

Designed by Michael Gertsch

124

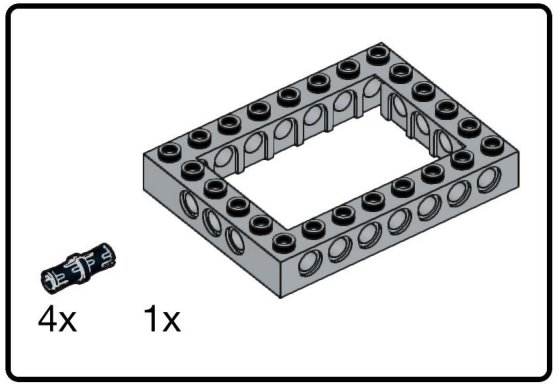

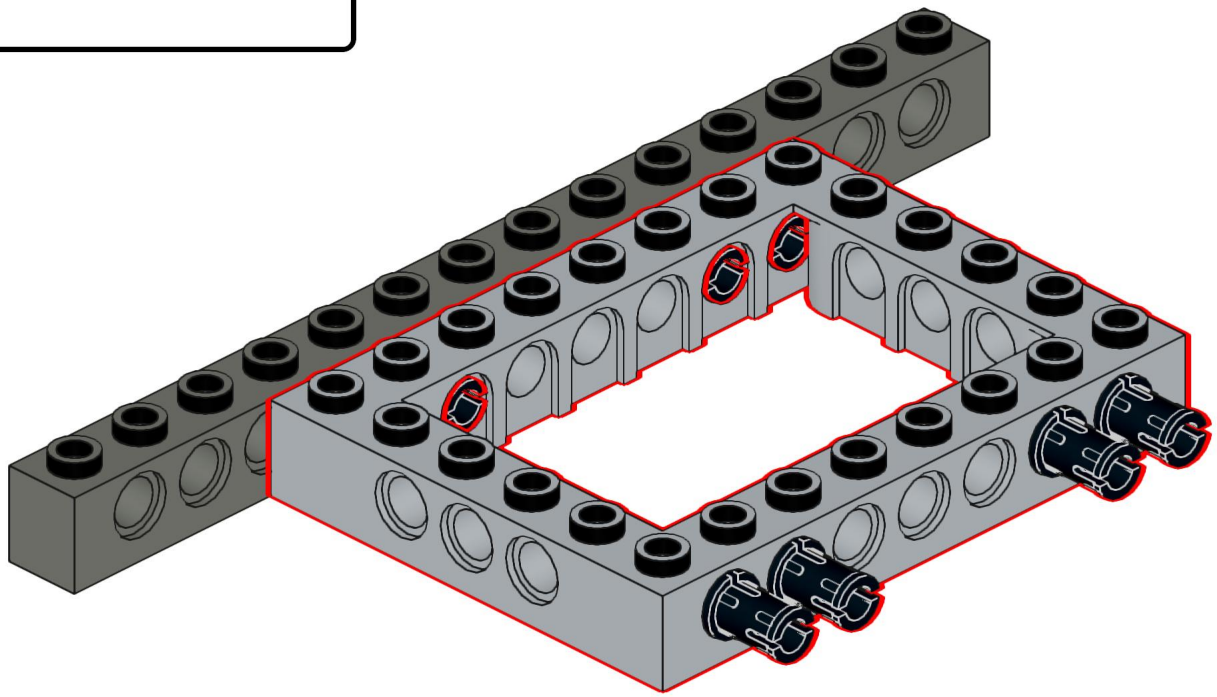

125

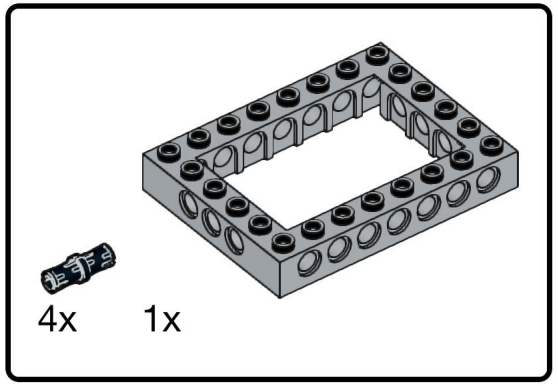

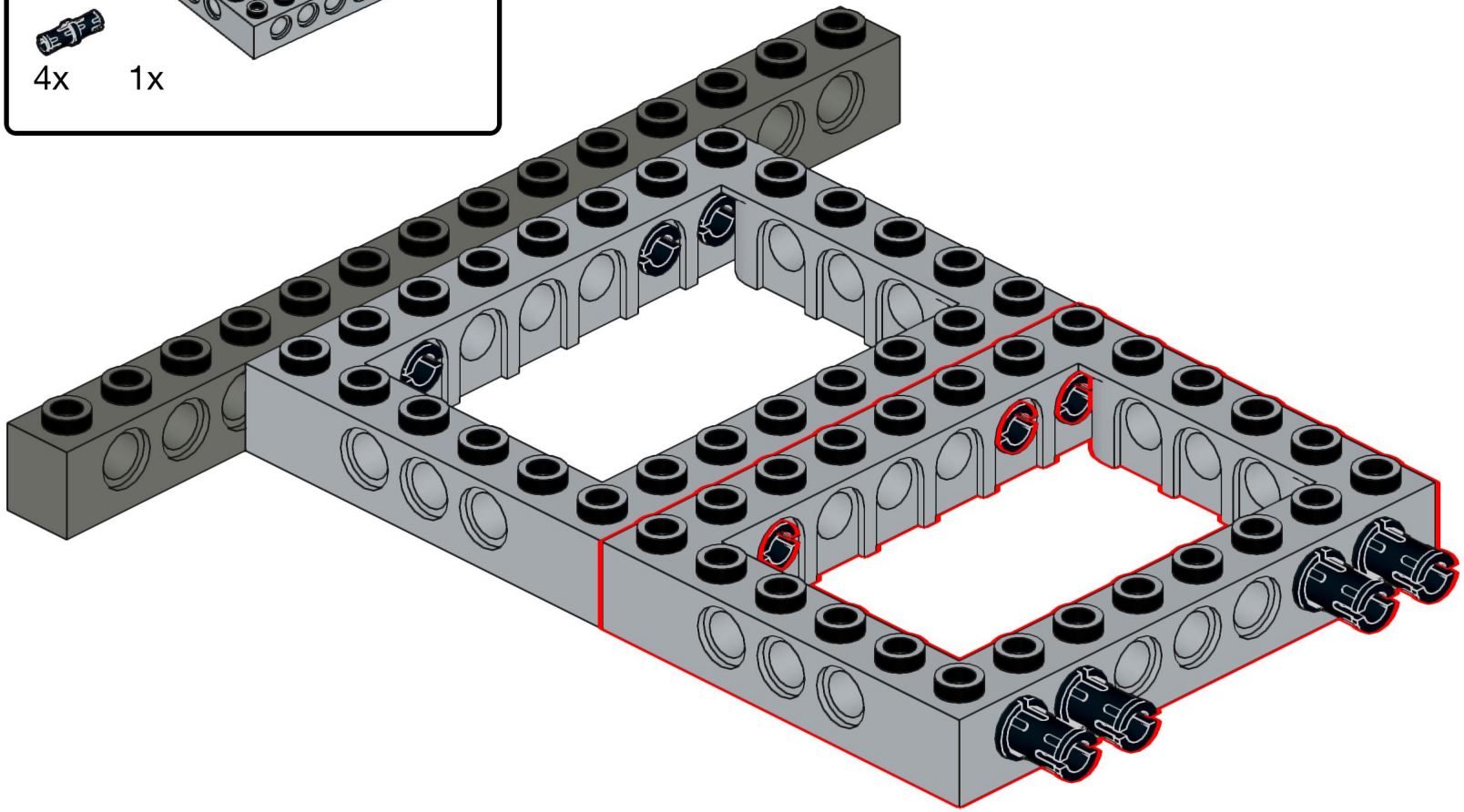

Designed by Michael Gertsch

126

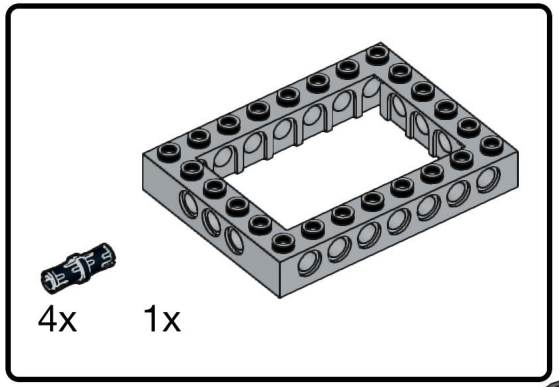

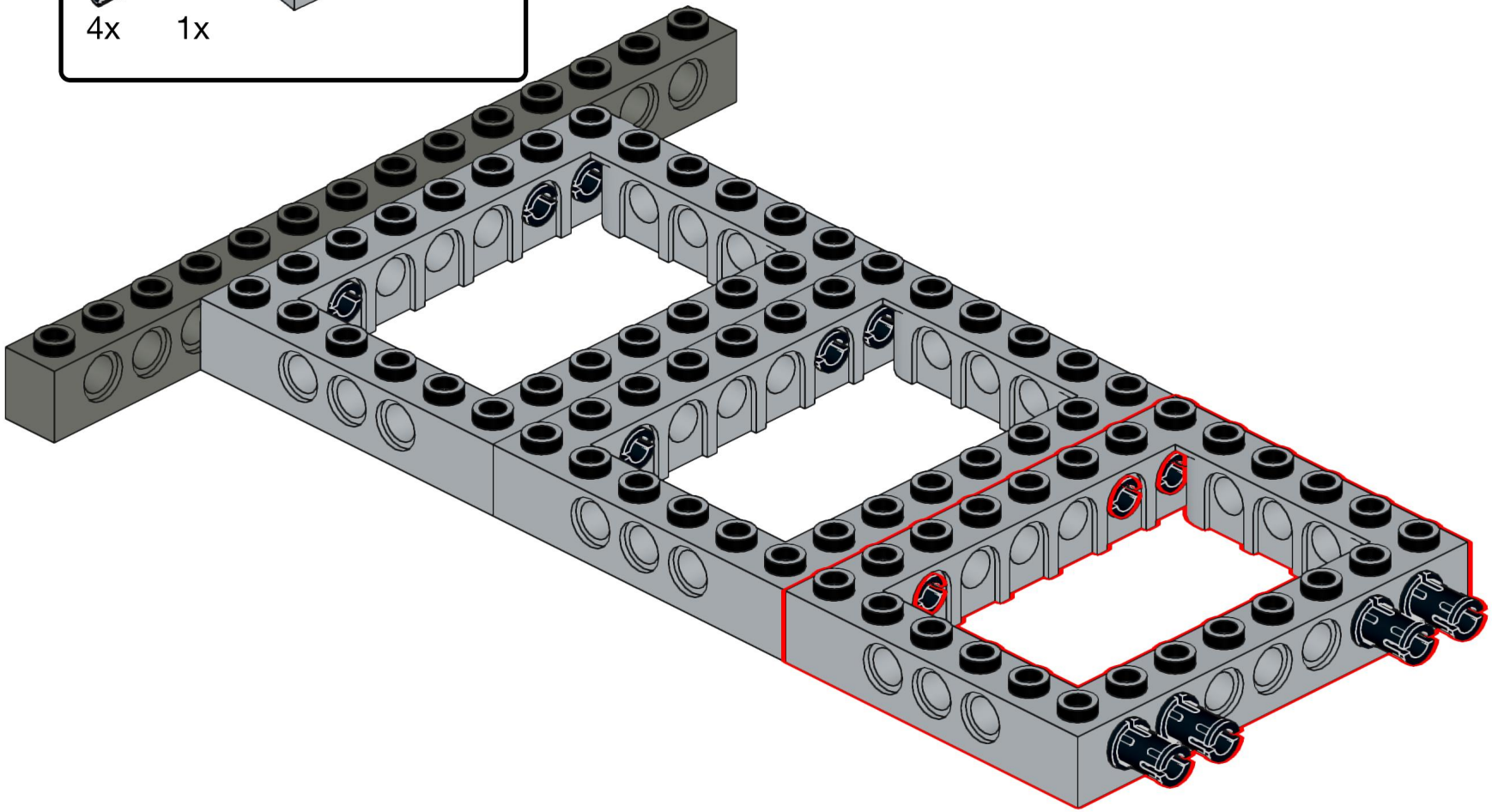

Designed by Michael Gertsch

127

6x

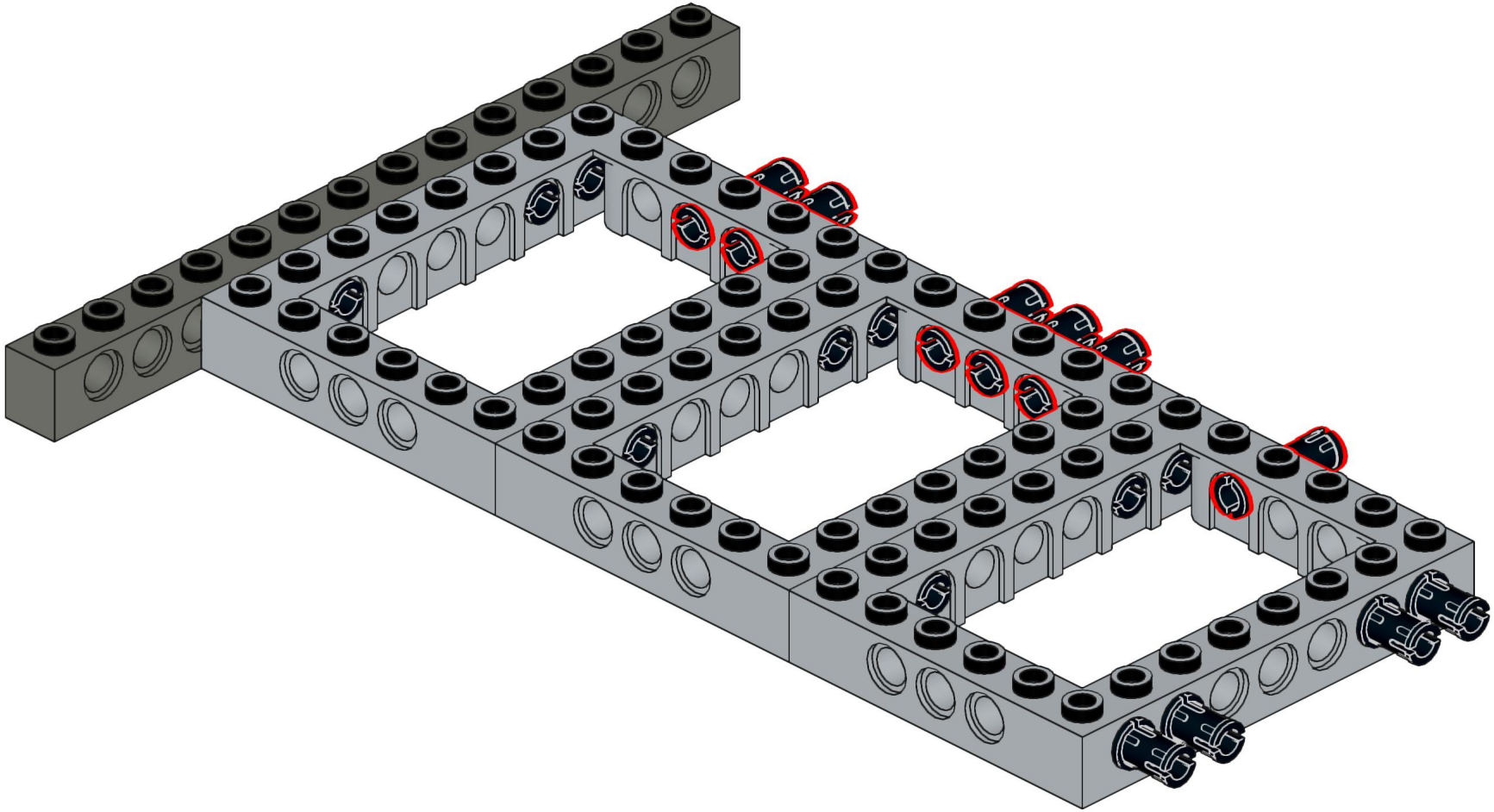

Designed by Michael Gertsch

128

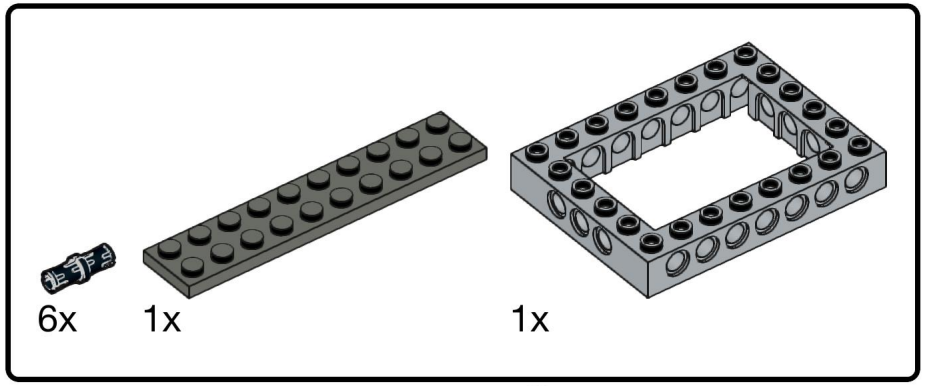

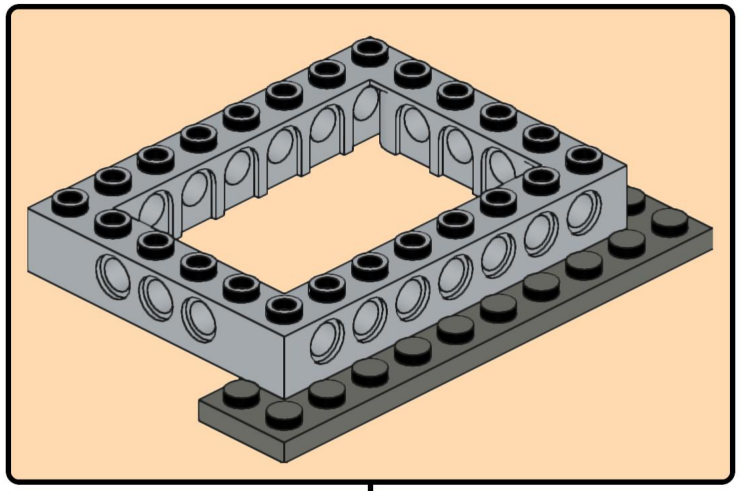

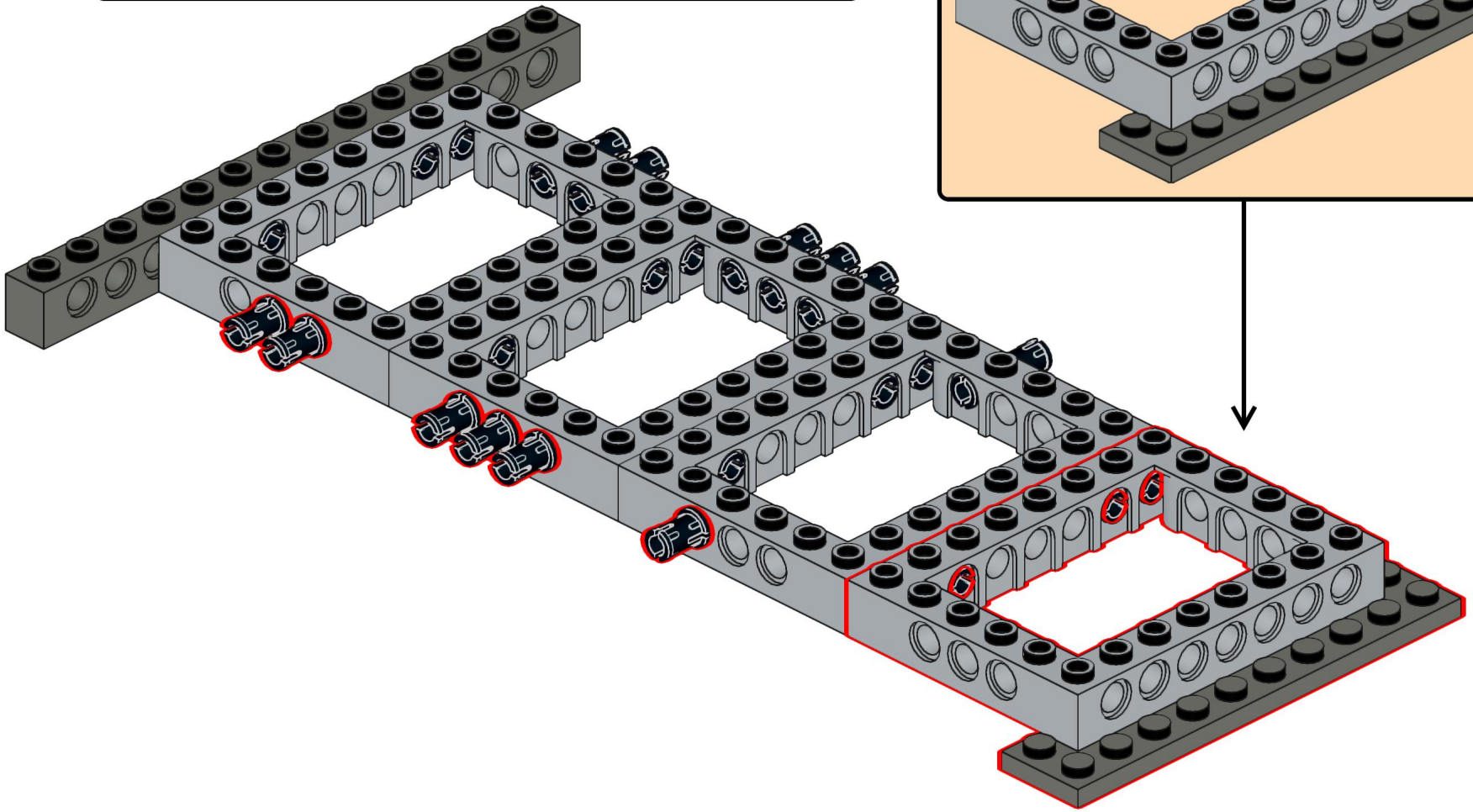

Designed by Michael Gertsch

129

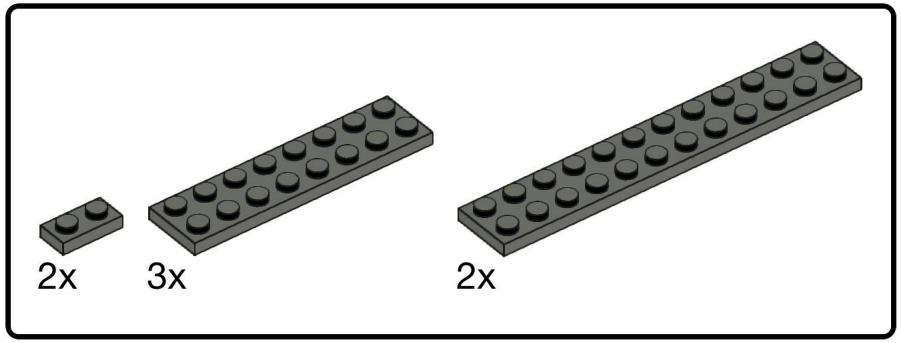

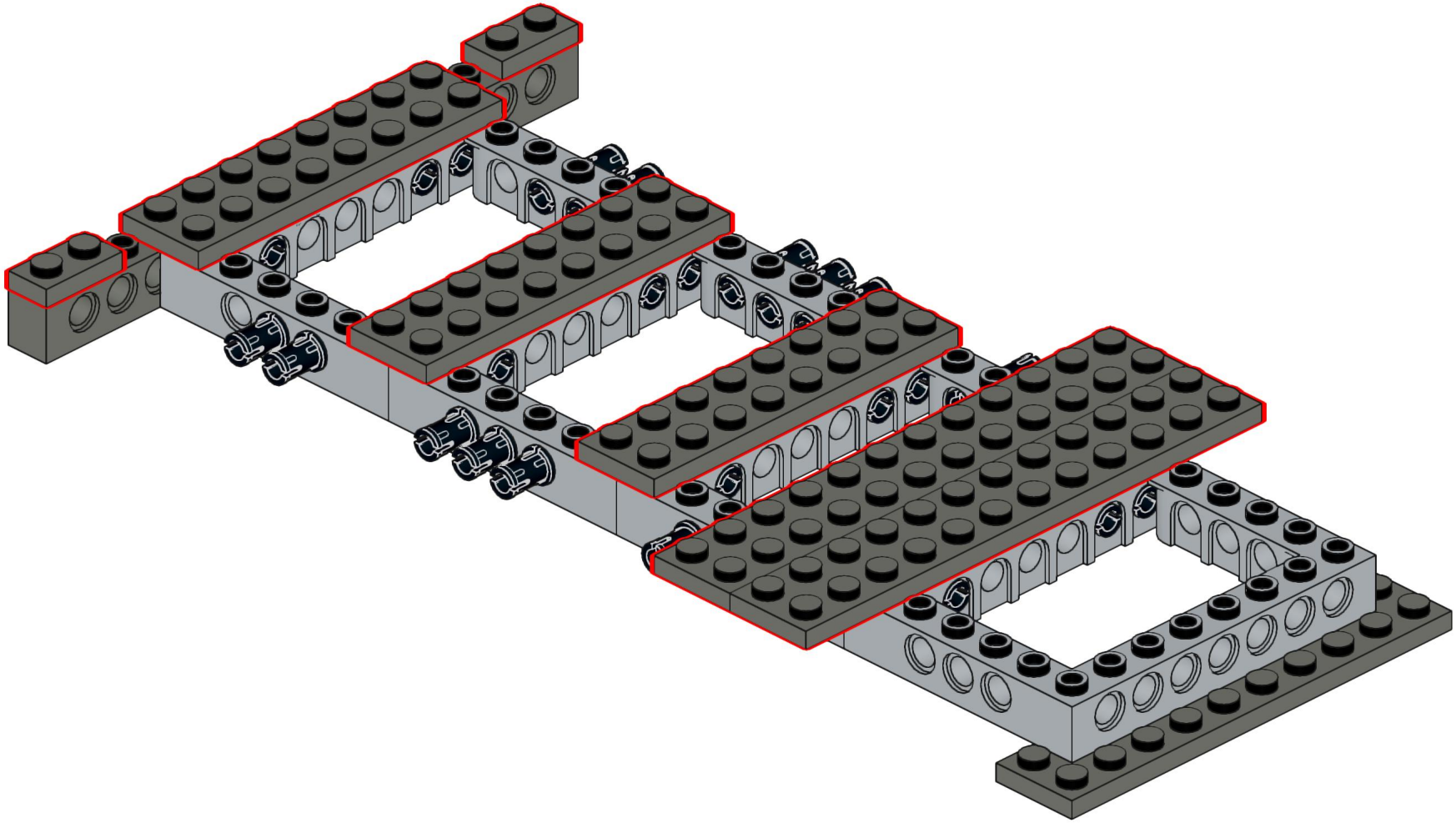

Designed by Michael Gertsch

130

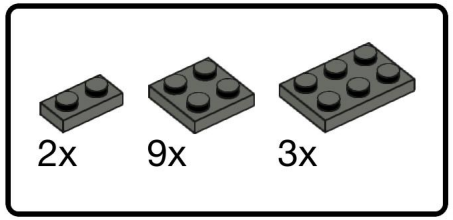

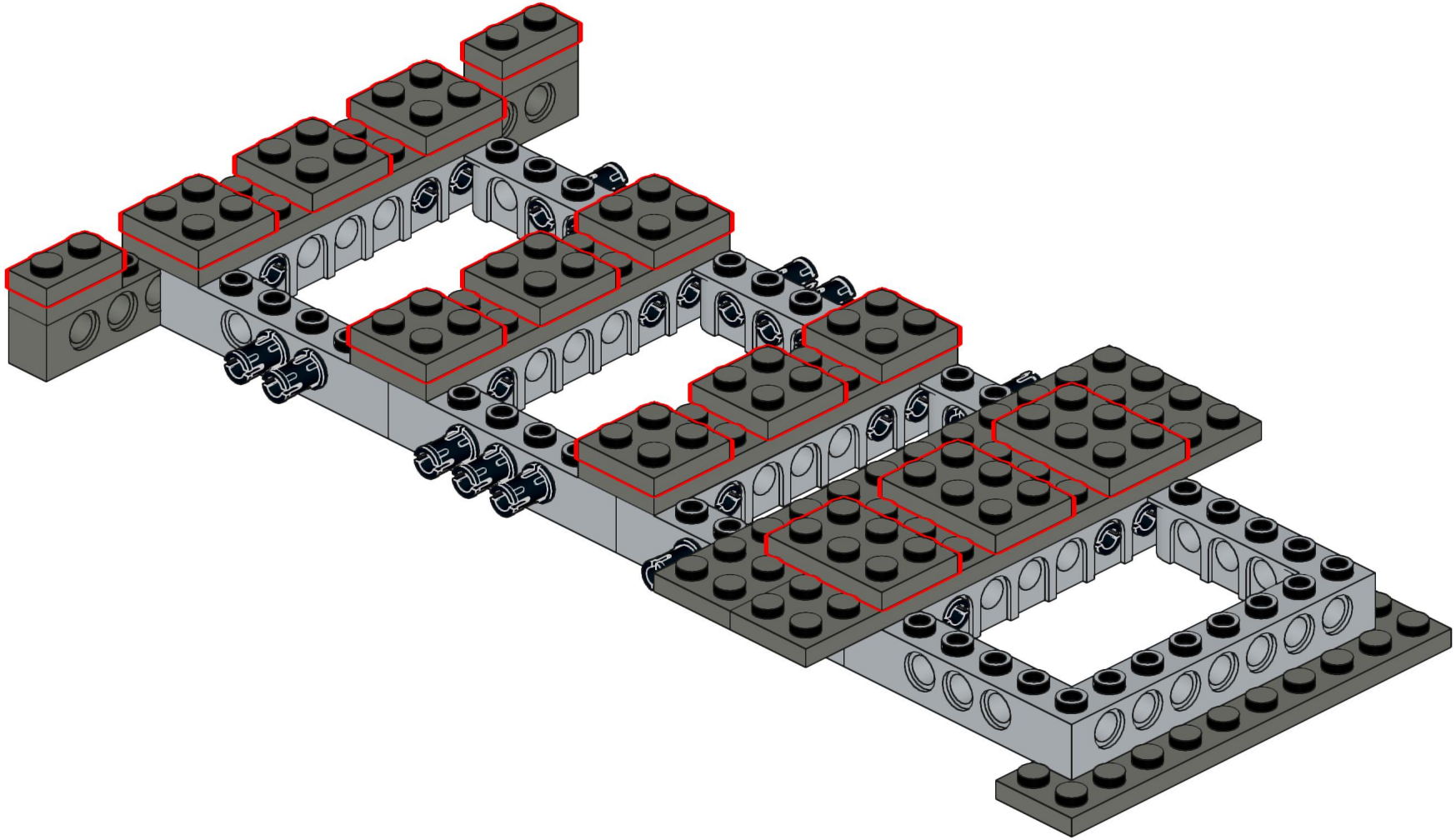

Designed by Michael Gertsch

131

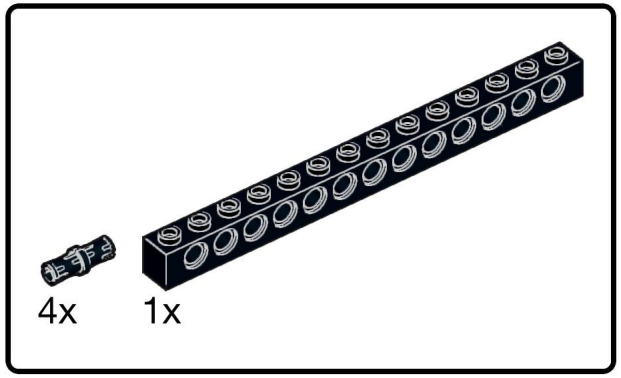

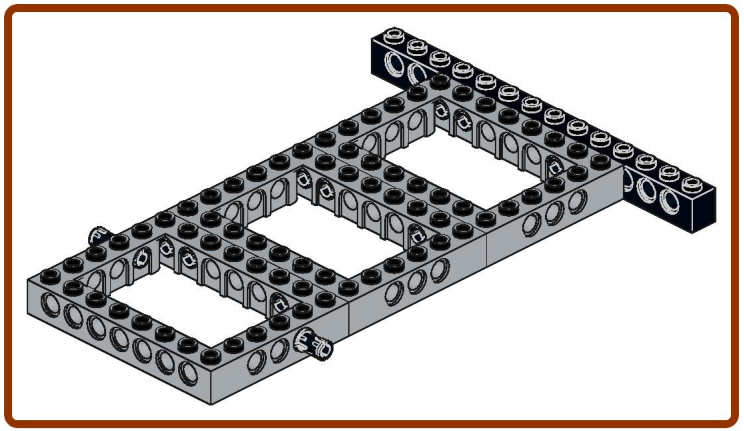

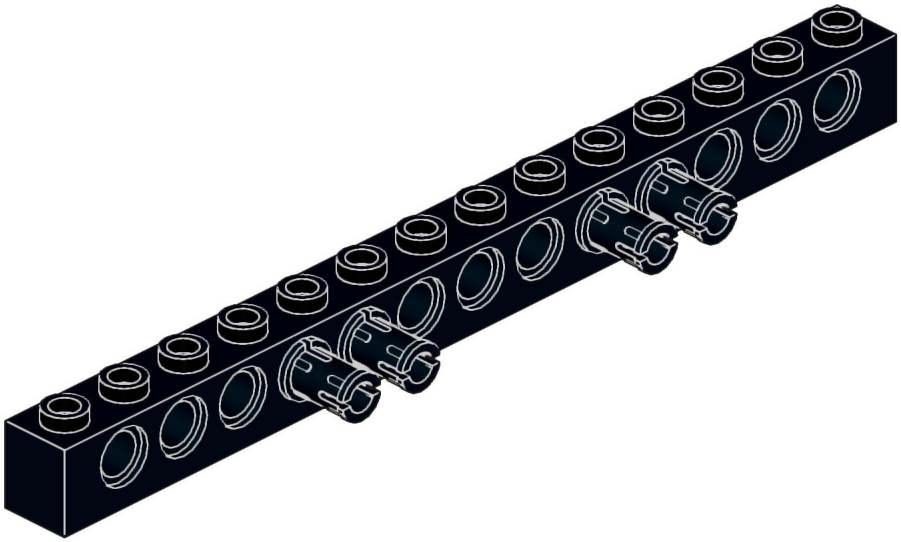

Designed by Michael Gertsch

132

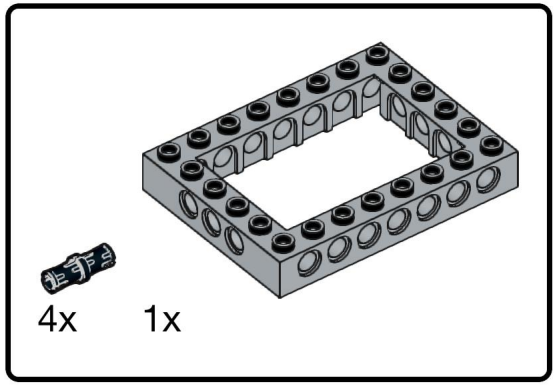

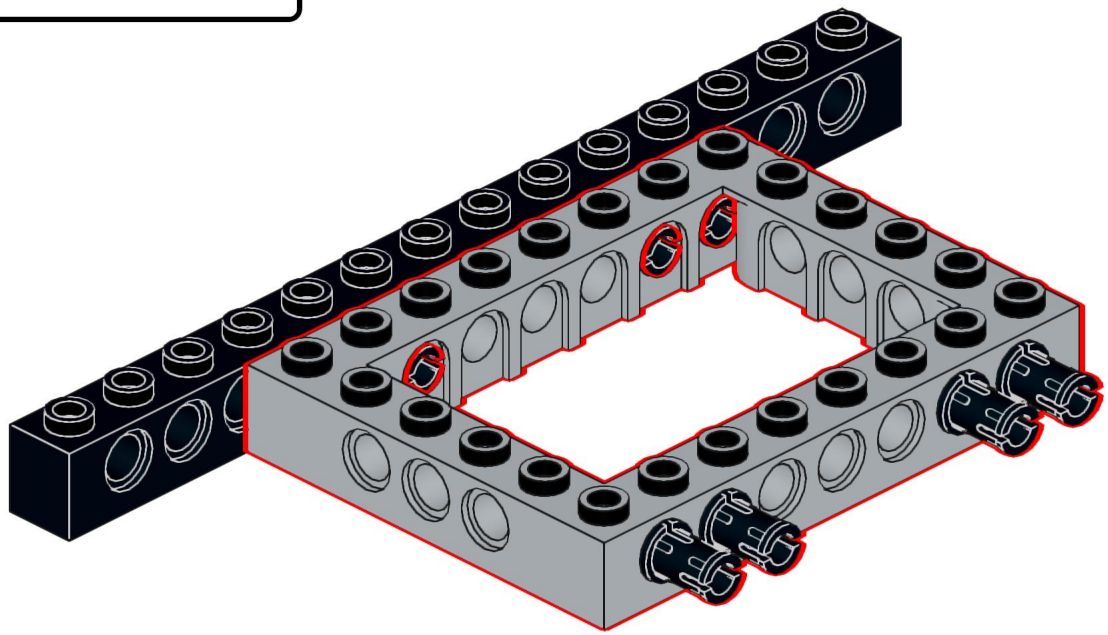

Designed by Michael Gertsch

133

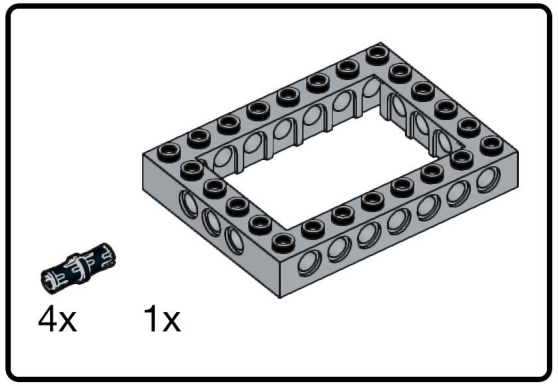

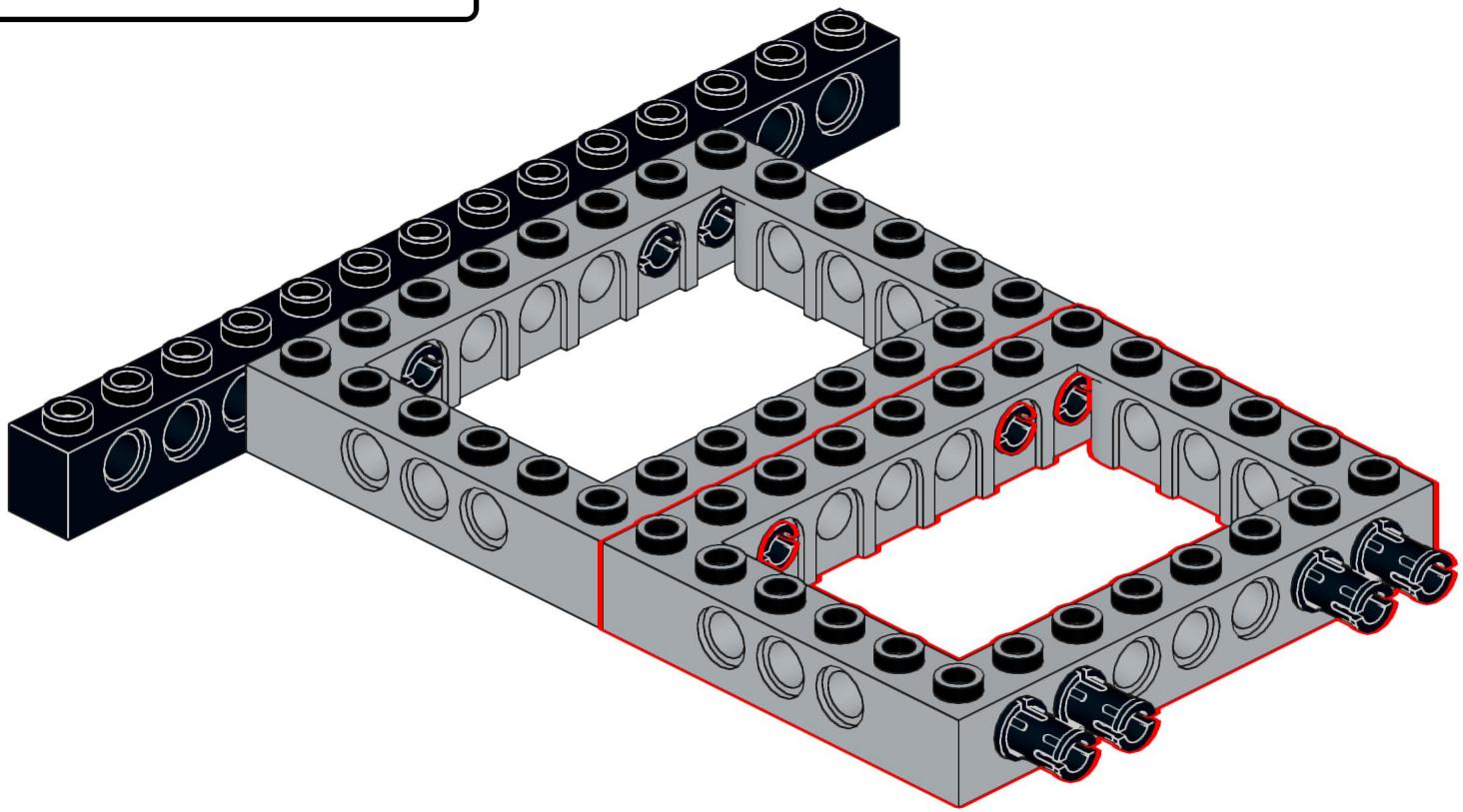

Designed by Michael Gertsch

134

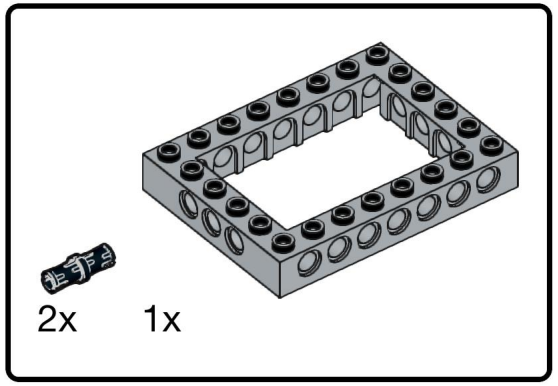

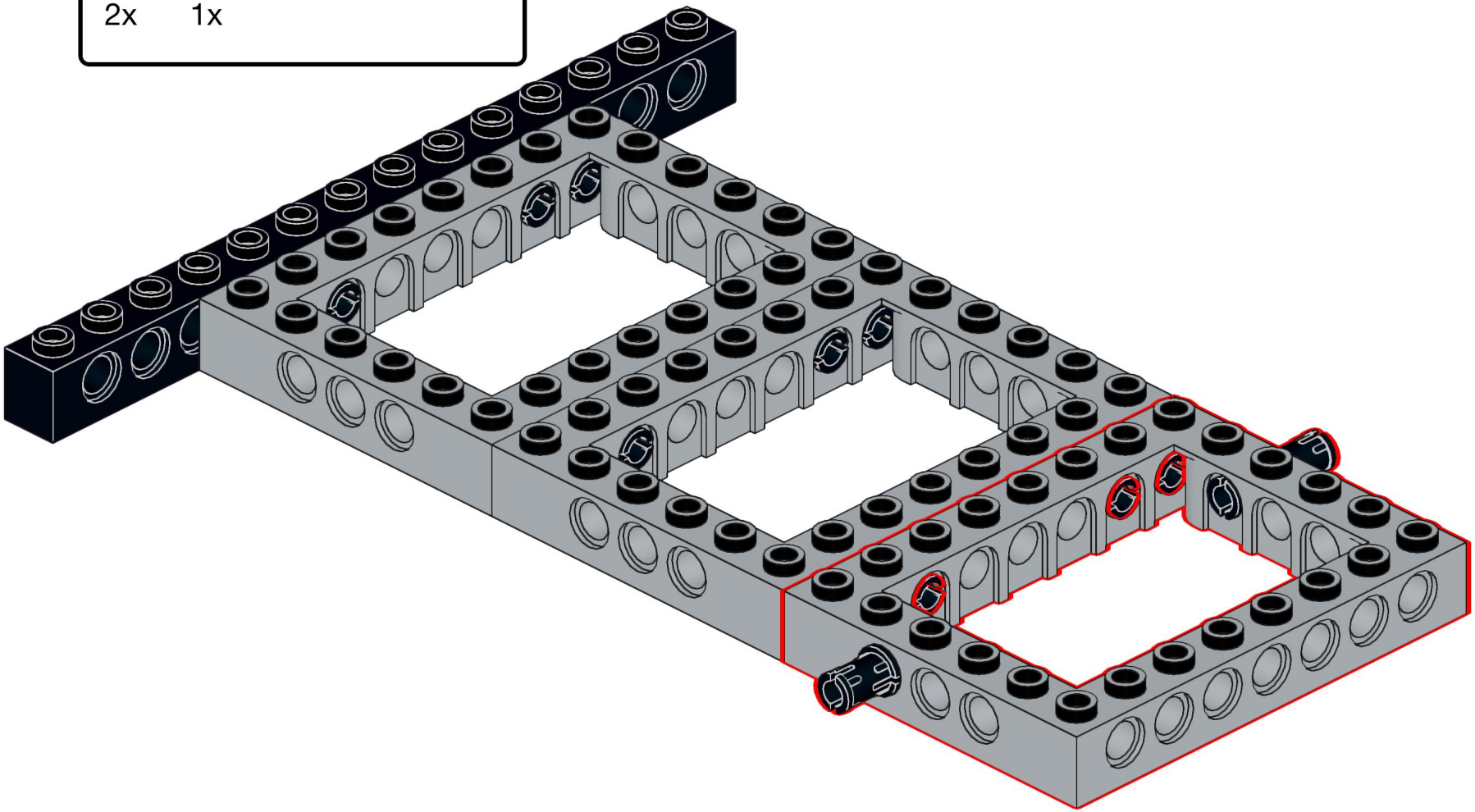

Designed by Michael Gertsch

135

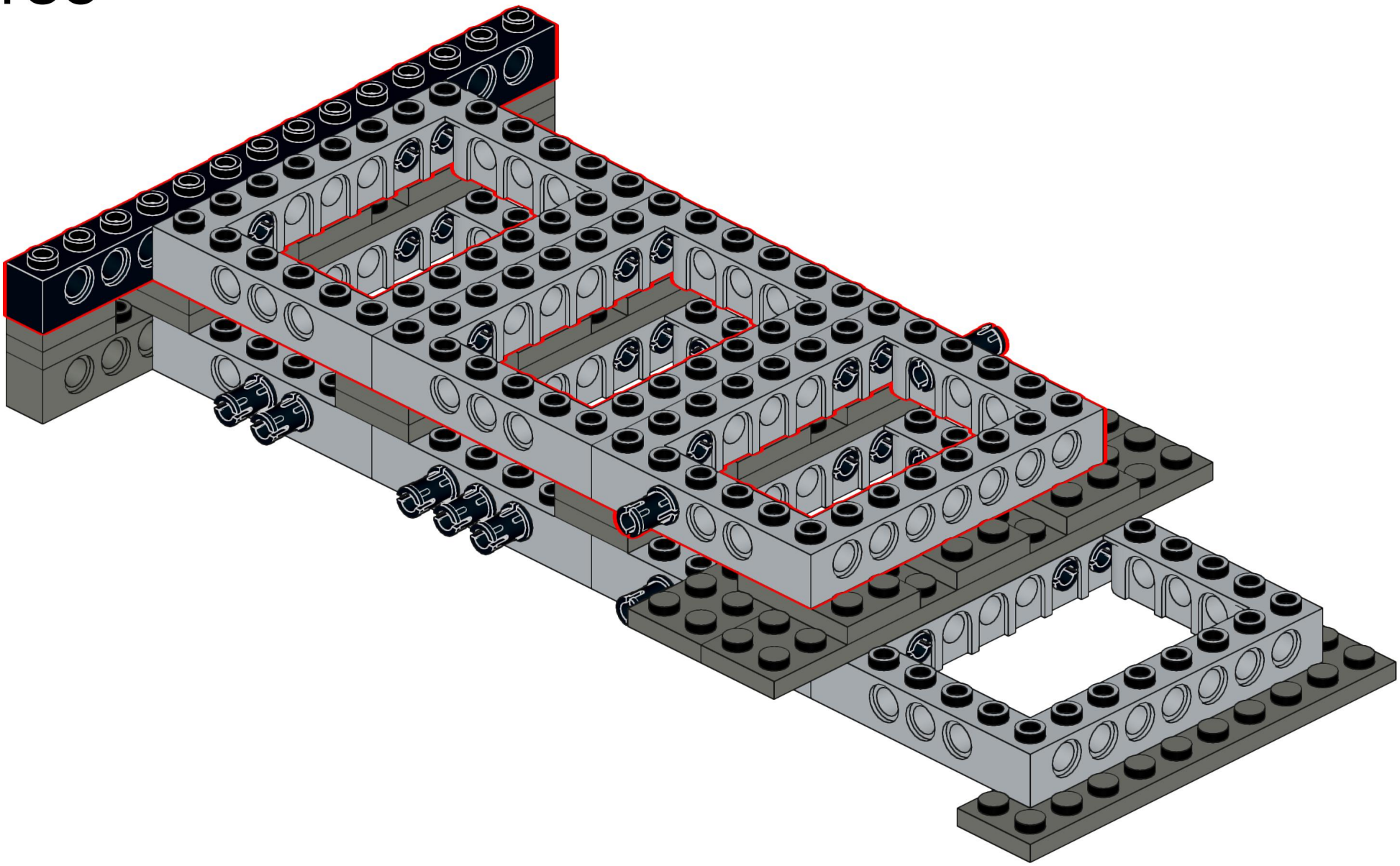

Designed by Michael Gertsch

136

2x

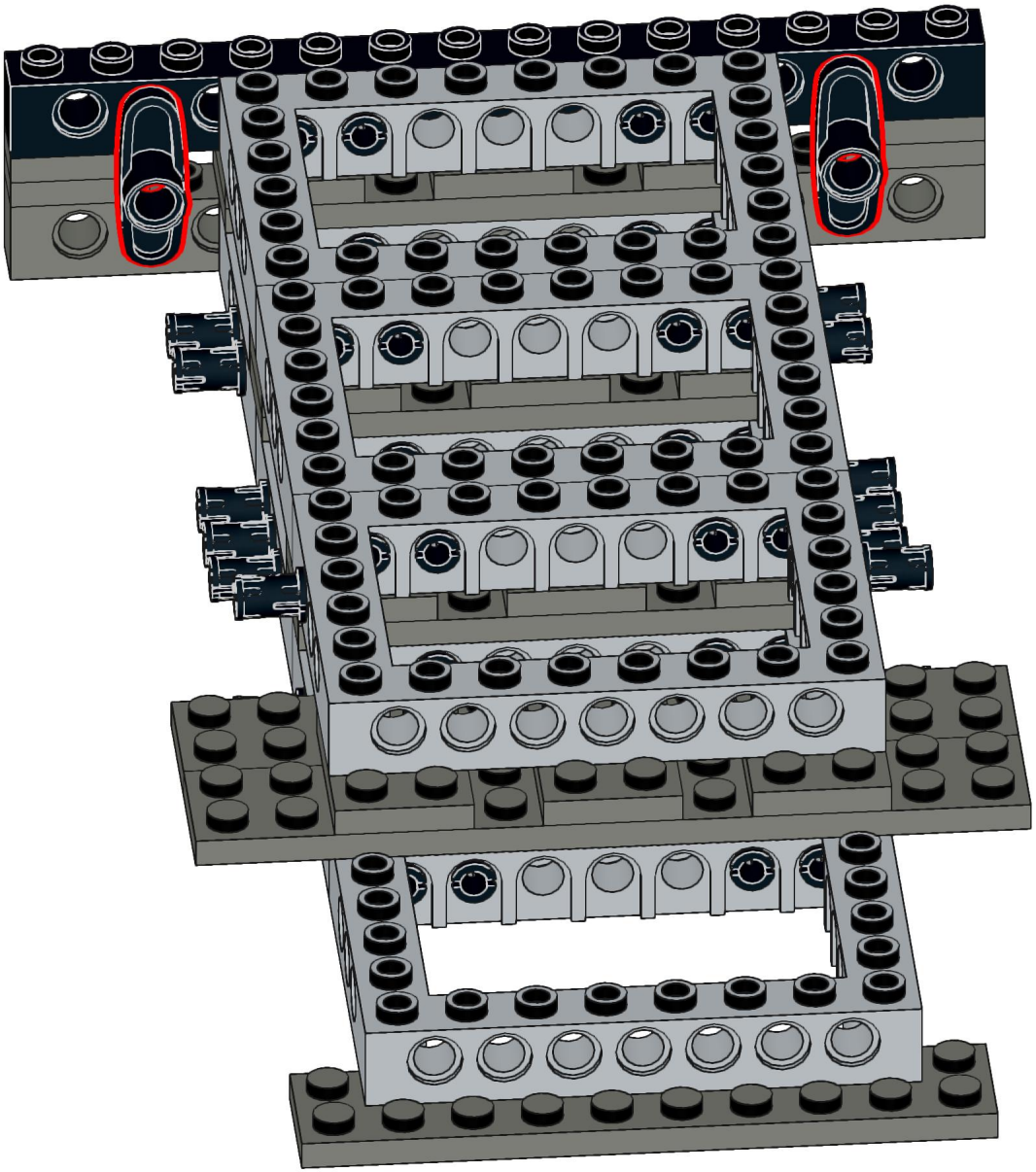

Designed by Michael Gertsch

137

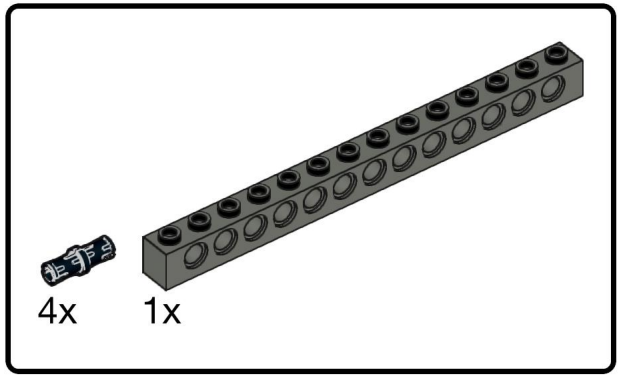

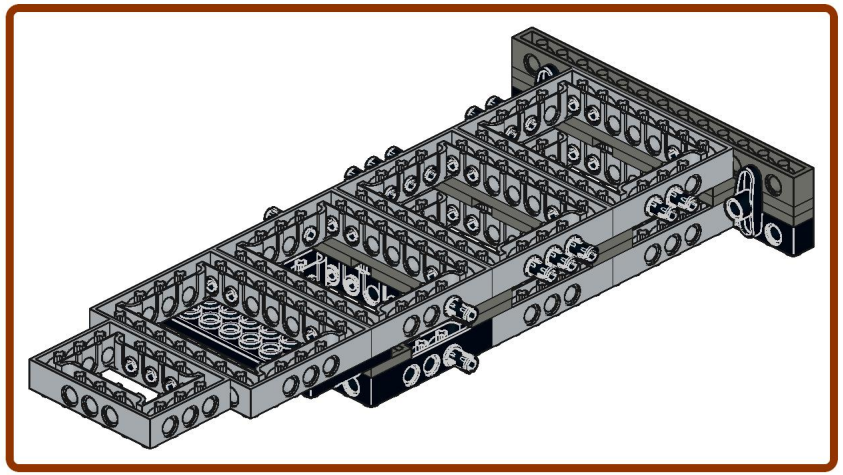

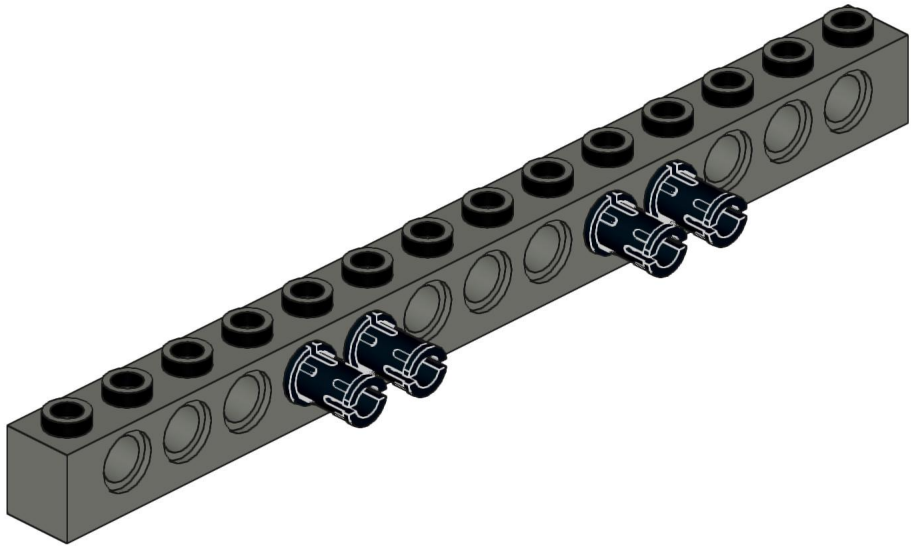

Designed by Michael Gertsch

138

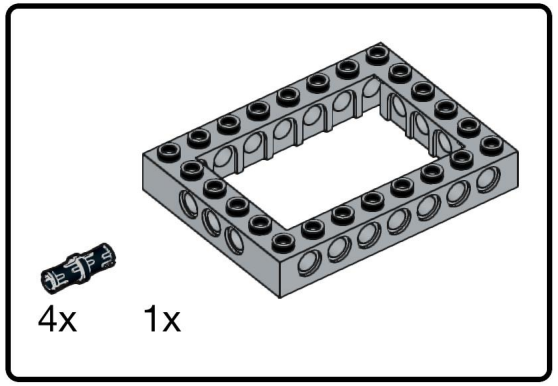

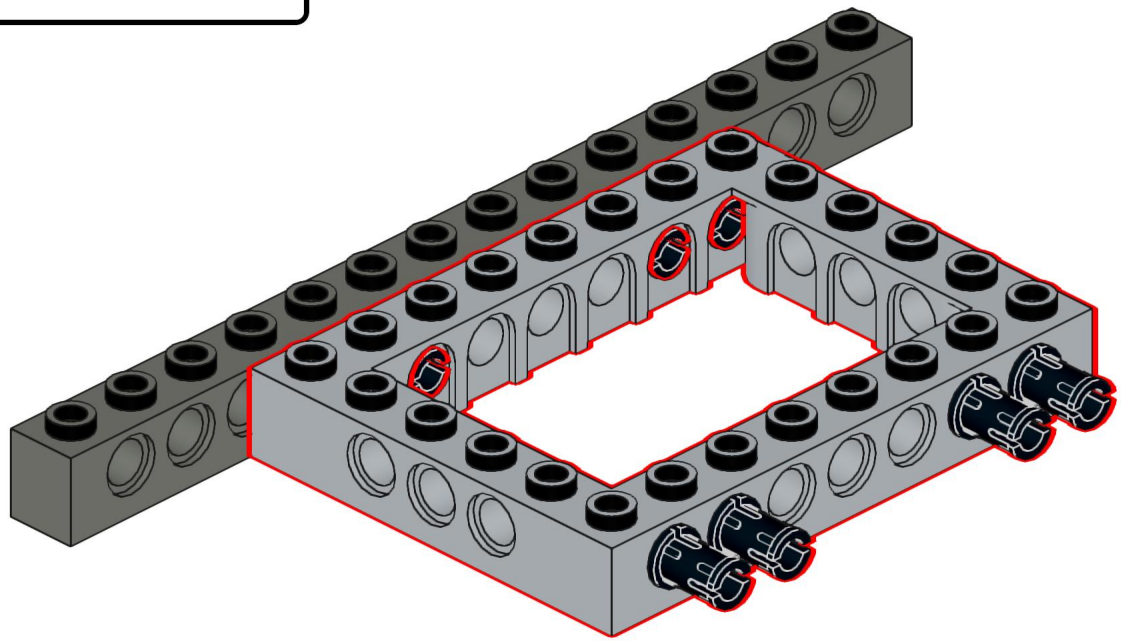

Designed by Michael Gertsch

139

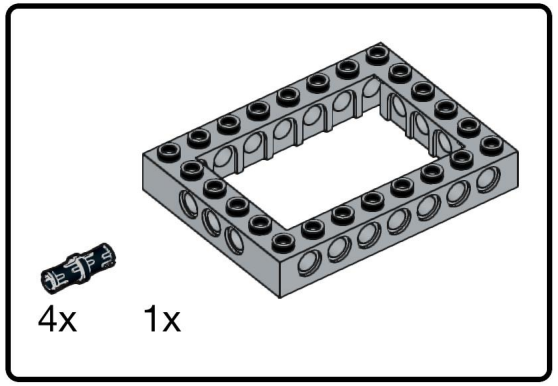

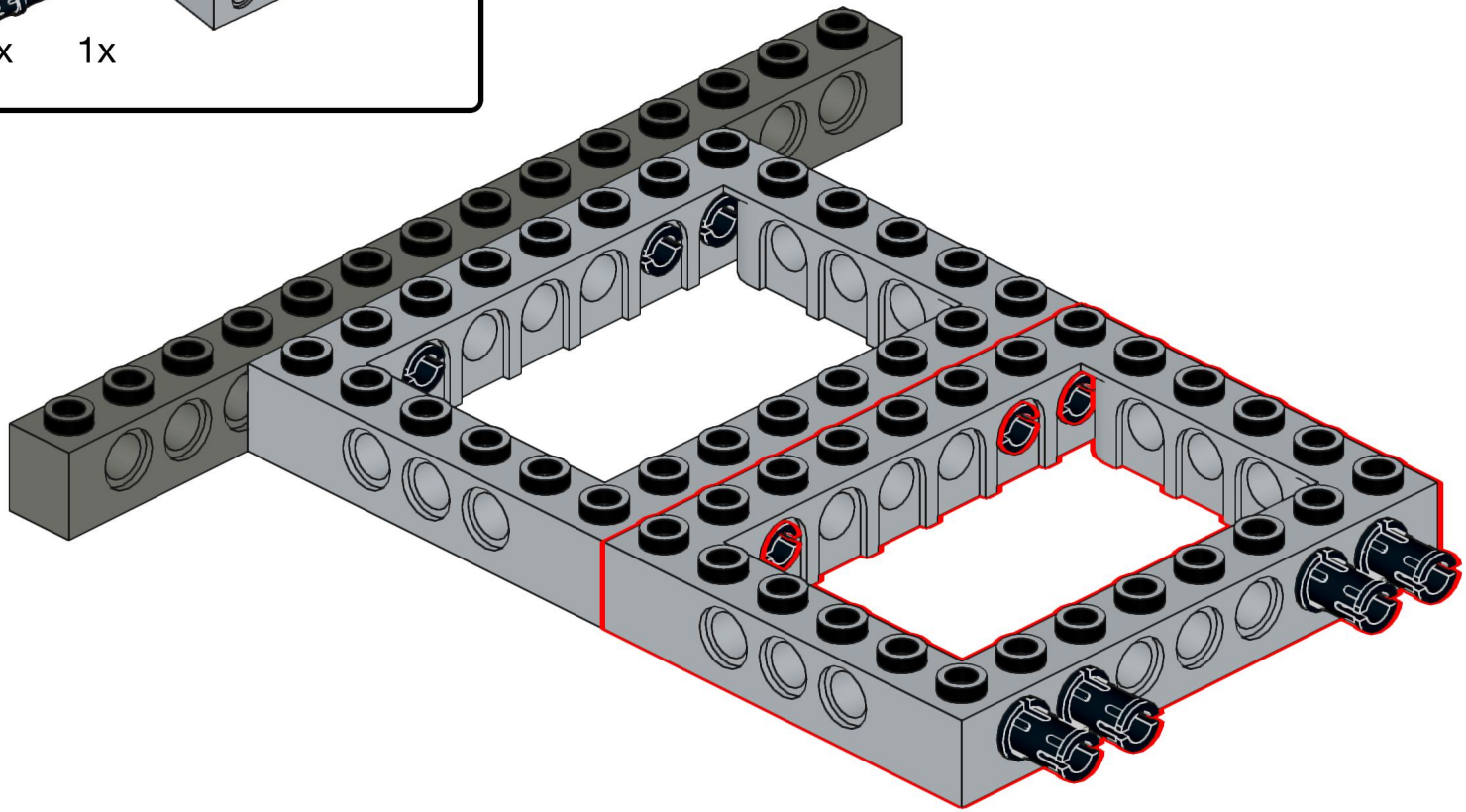

Designed by Michael Gertsch

140

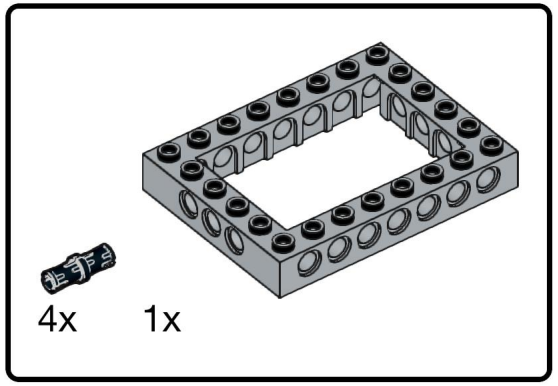

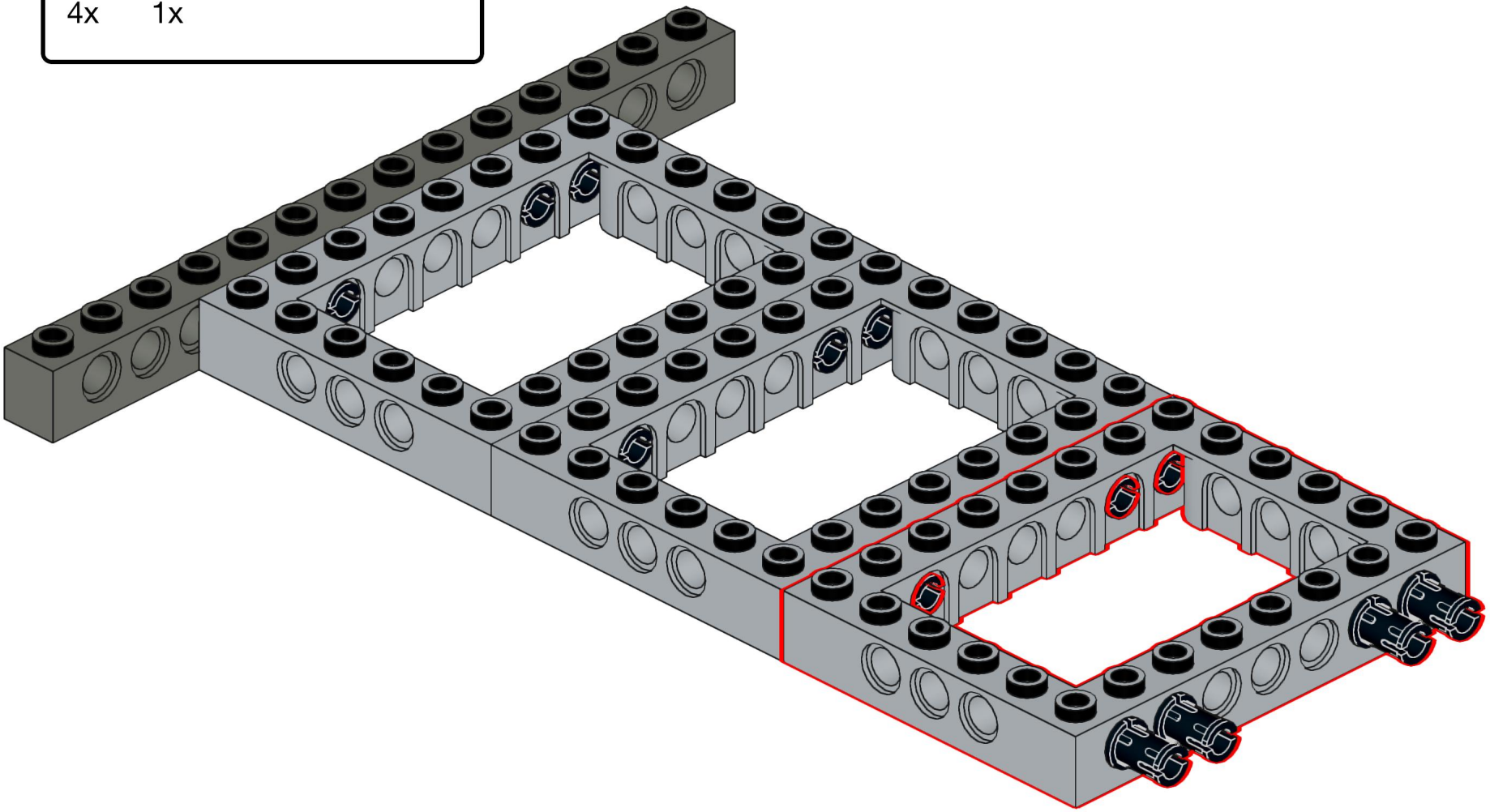

Designed by Michael Gertsch

141

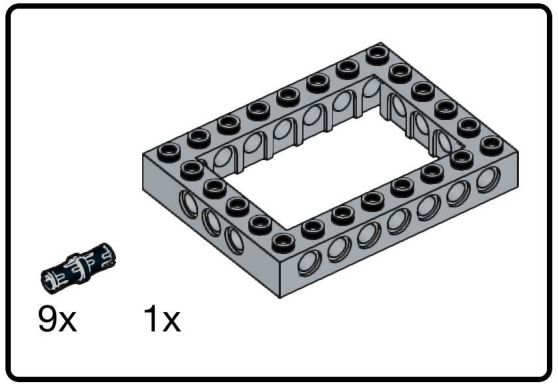

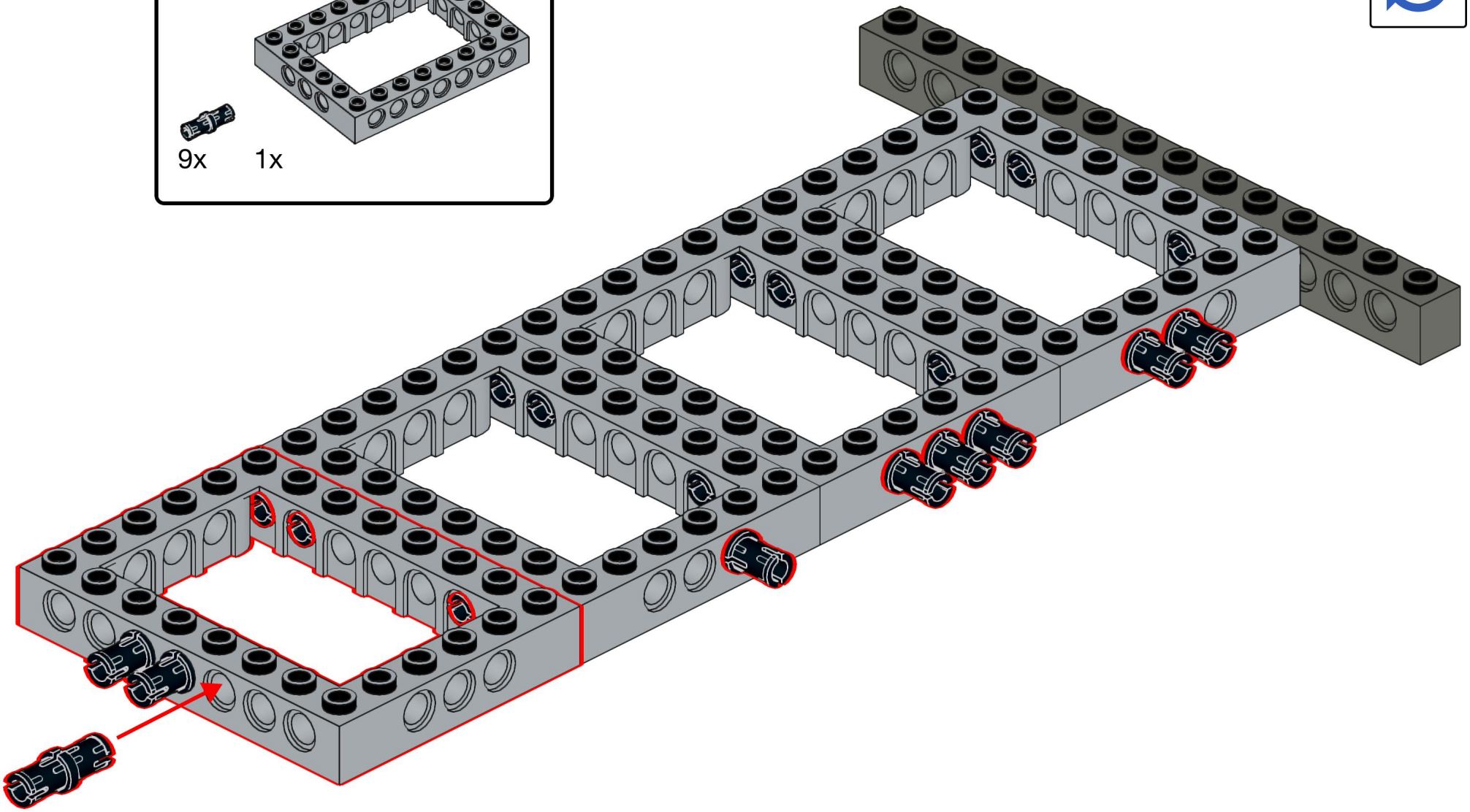

142

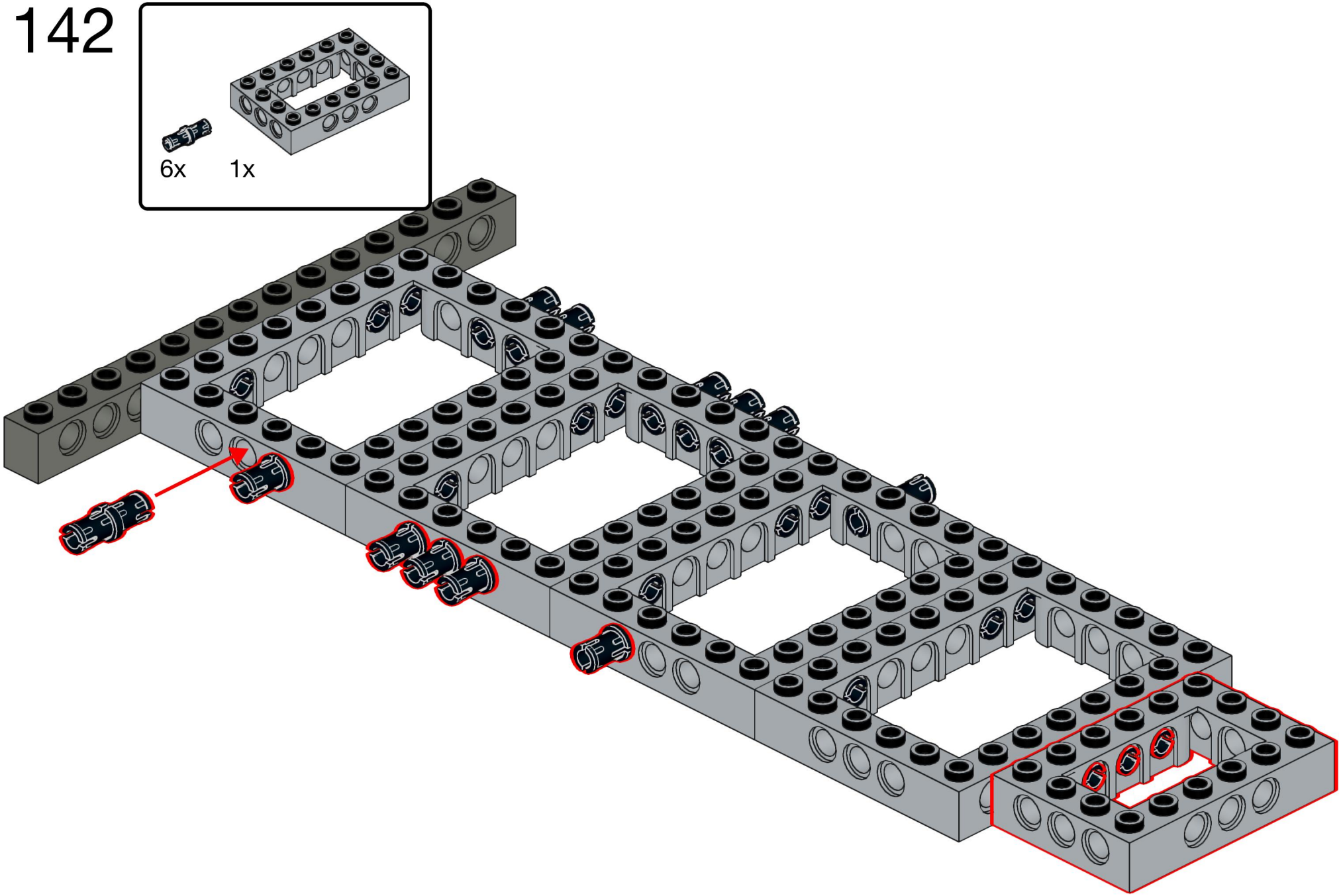

Designed by Michael Gertsch

143

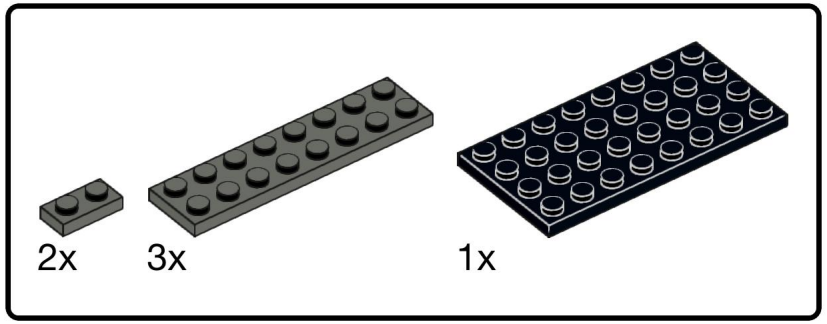

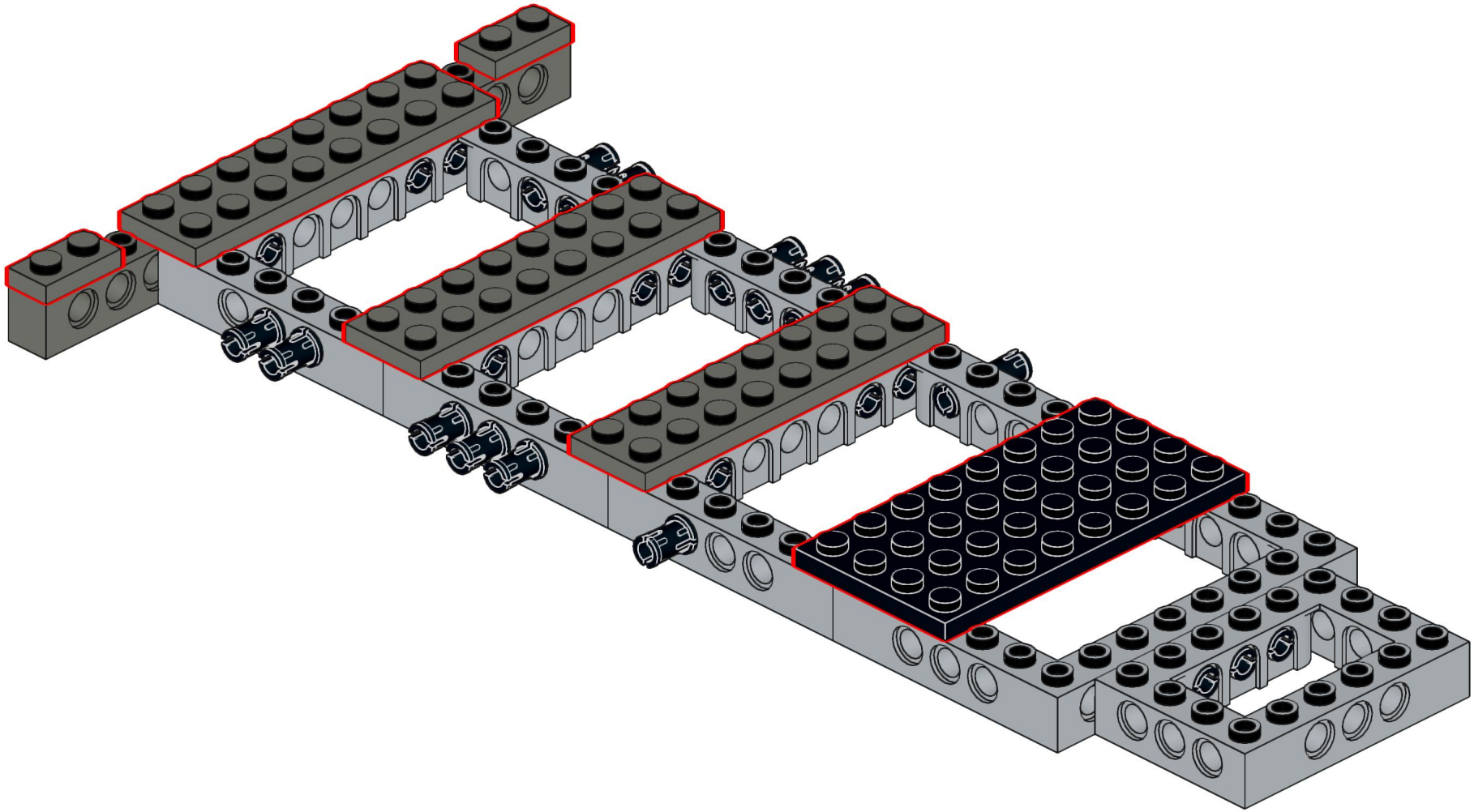

Designed by Michael Gertsch

144

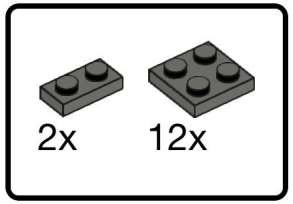

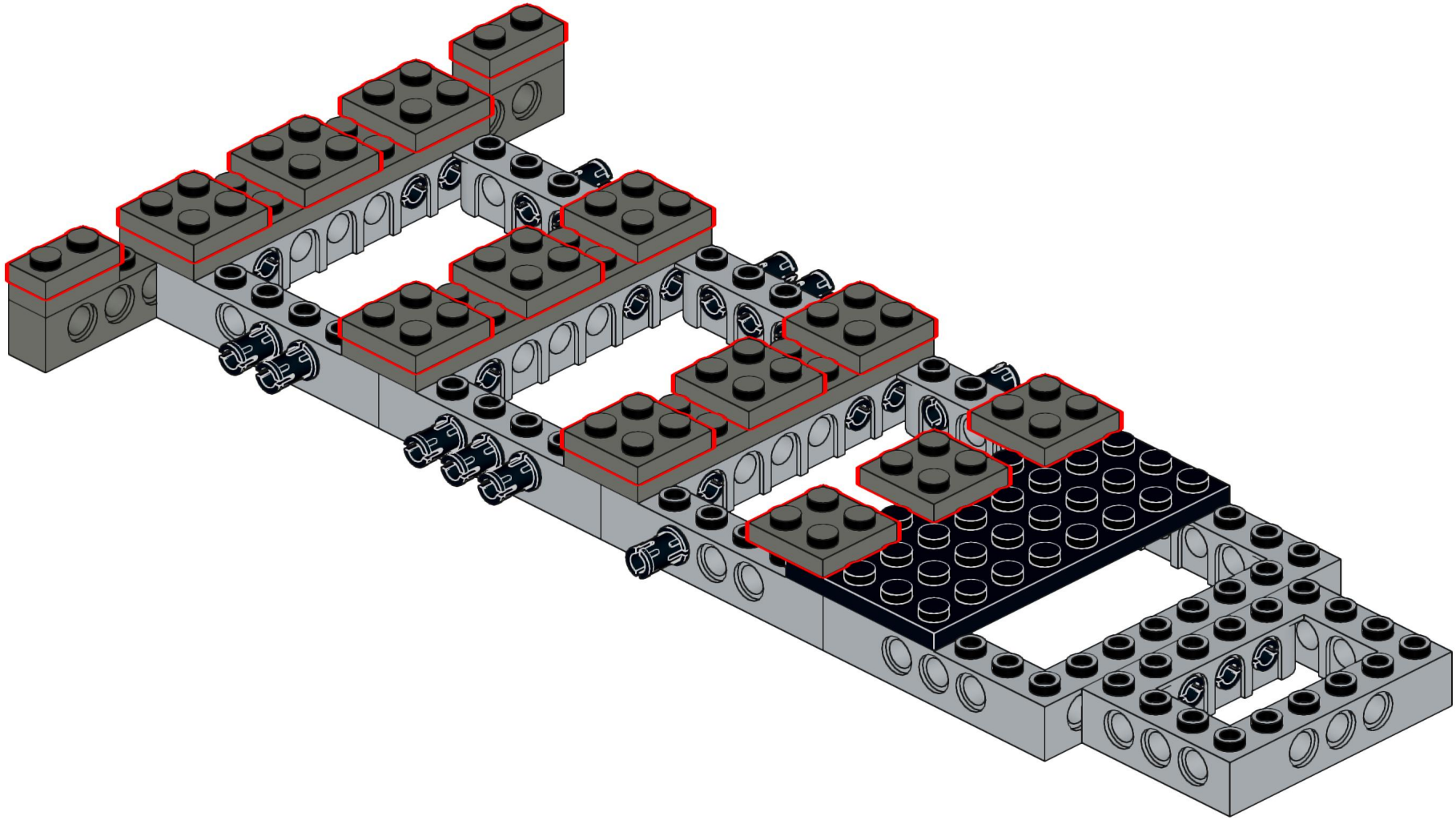

Designed by Michael Gertsch

145

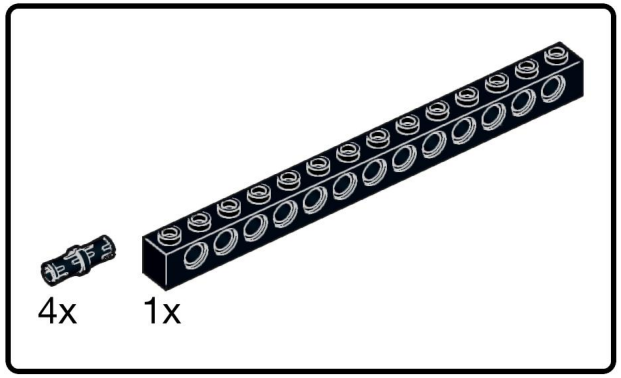

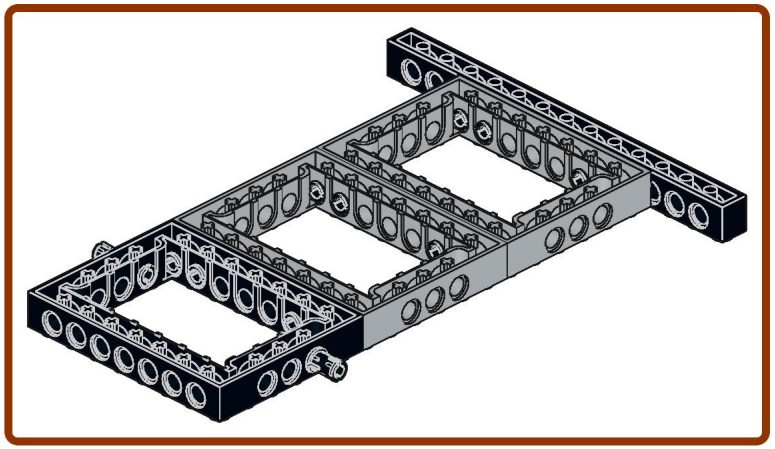

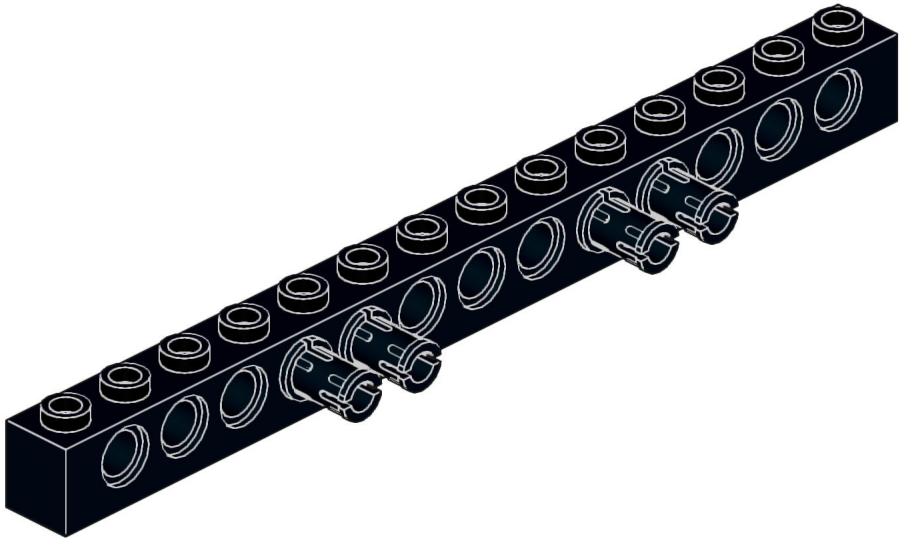

Designed by Michael Gertsch

146

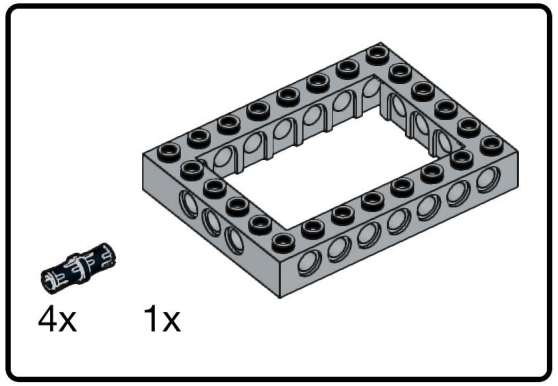

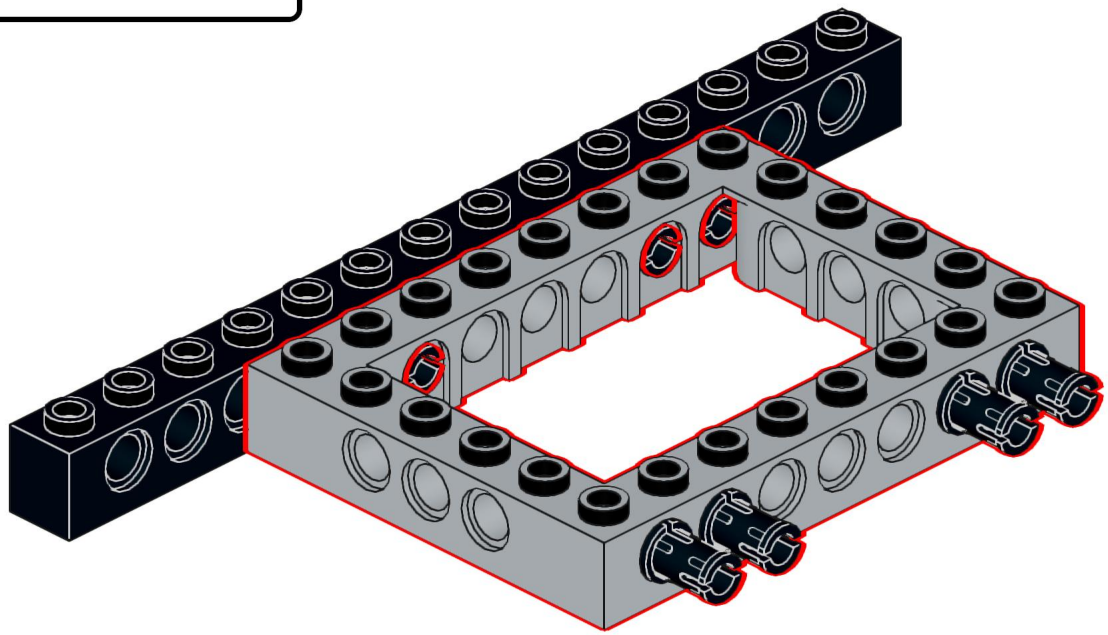

Designed by Michael Gertsch

147

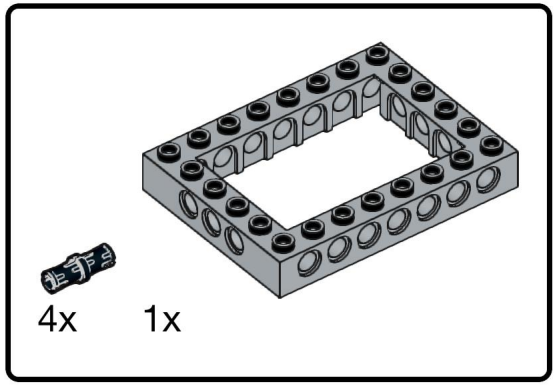

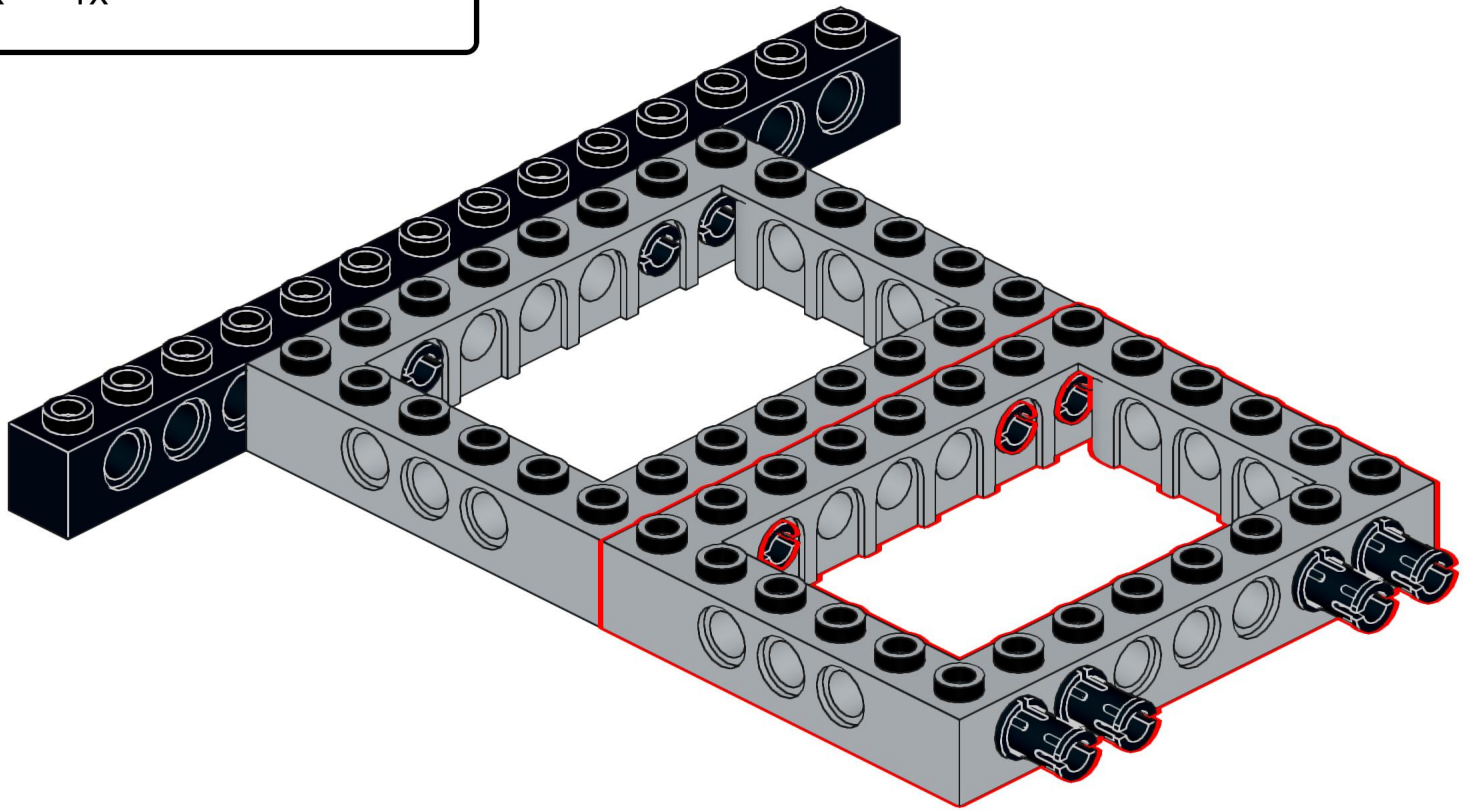

Designed by Michael Gertsch

148

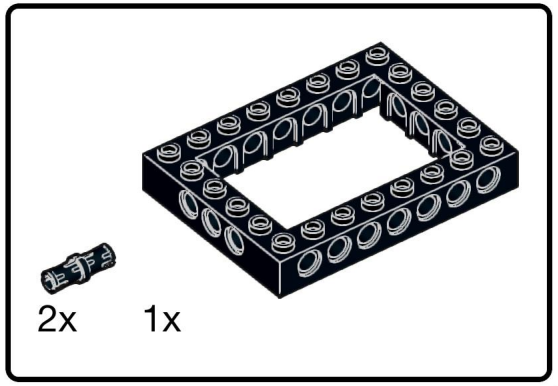

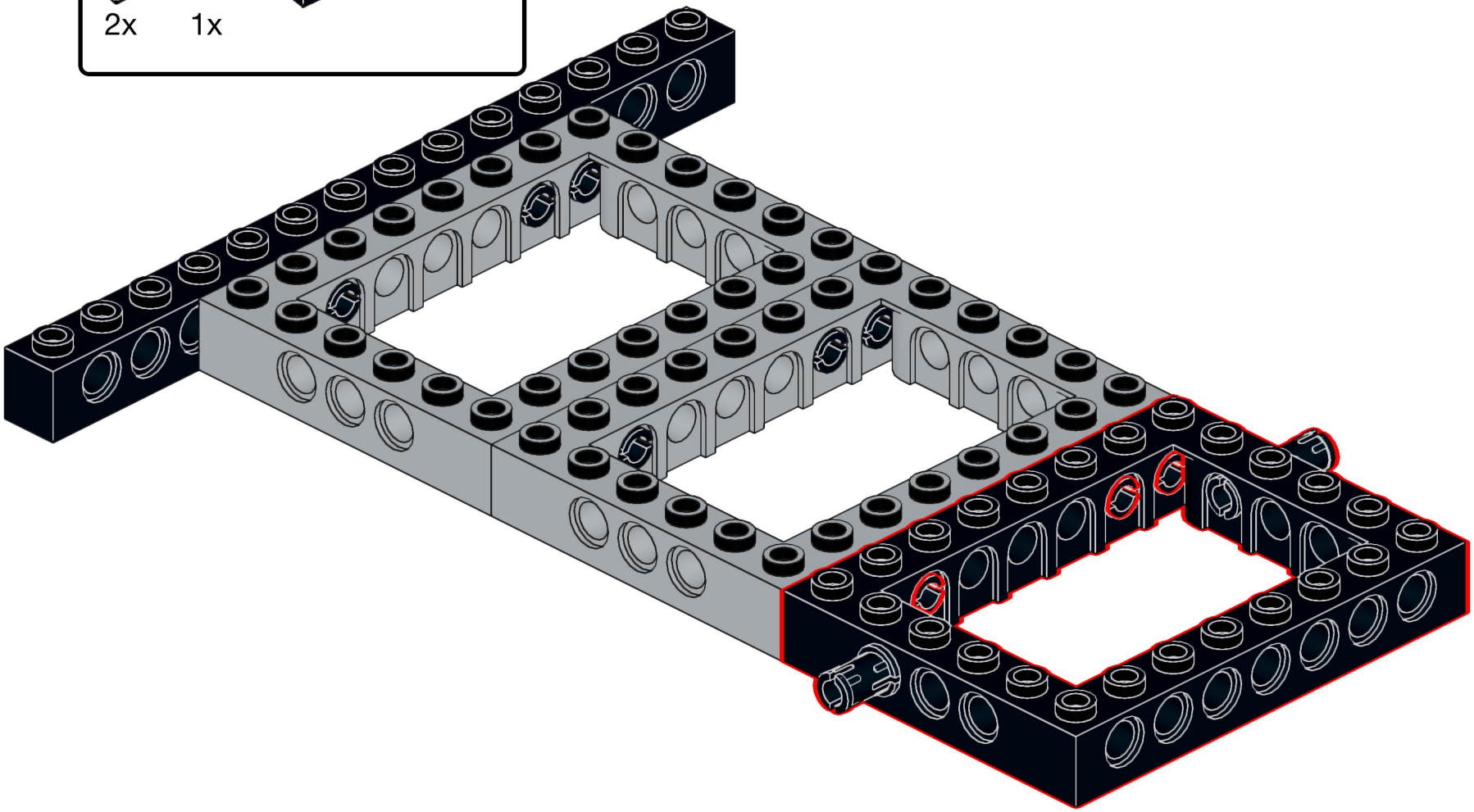

Designed by Michael Gertsch

149

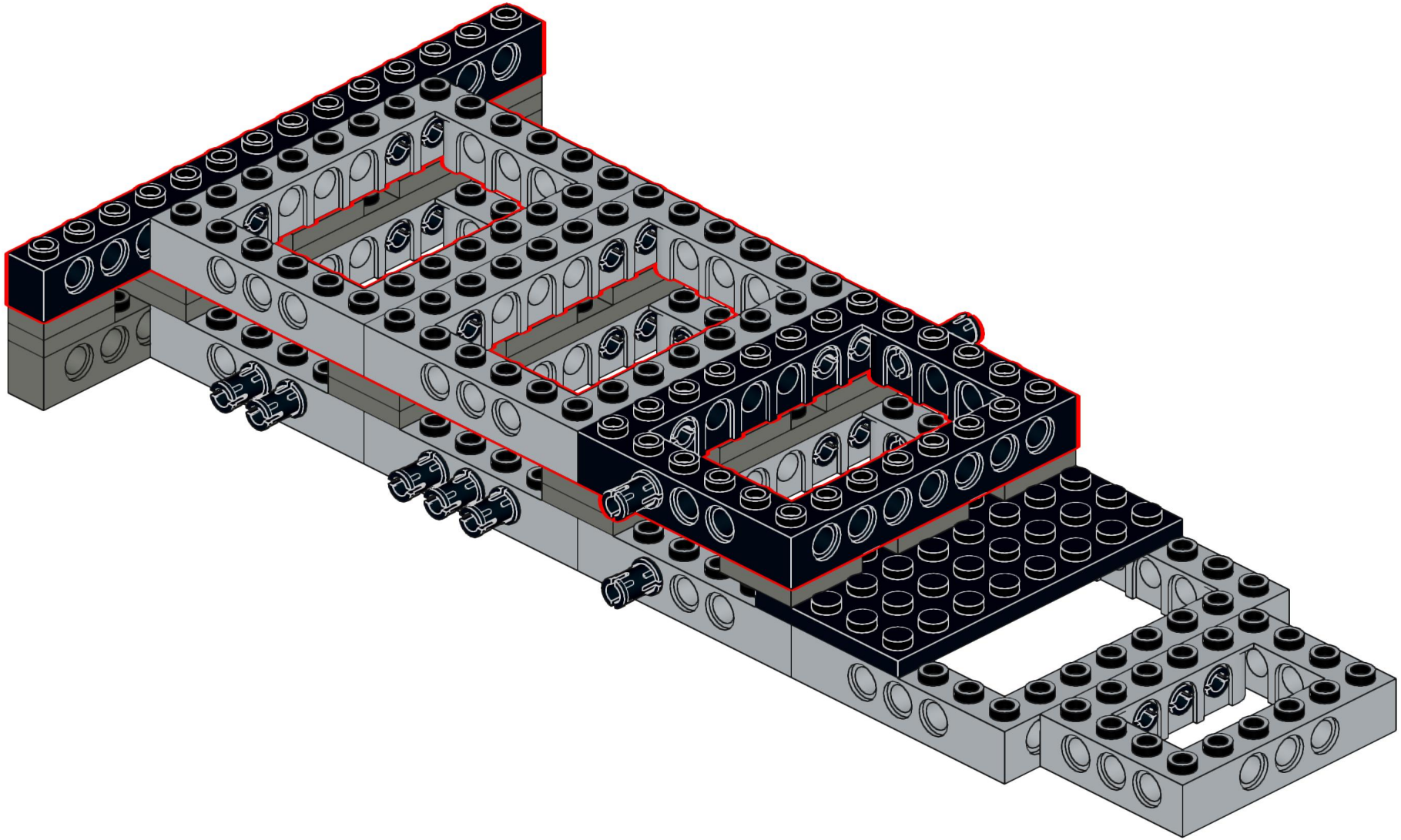

Designed by Michael Gertsch

150

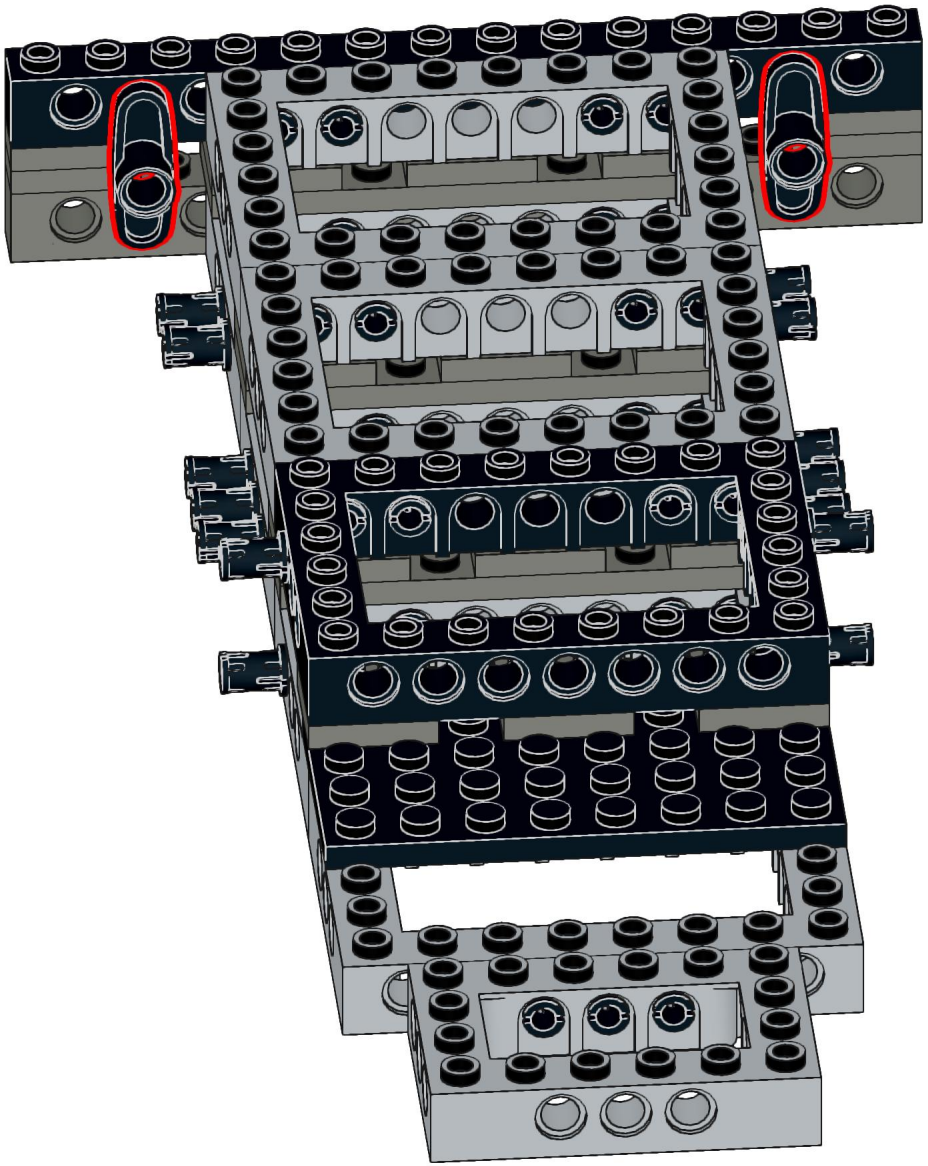

Designed by Michael Gertsch

Make sure that the studs are looking in the right direction. The two parts will be fixed together in the next steps.

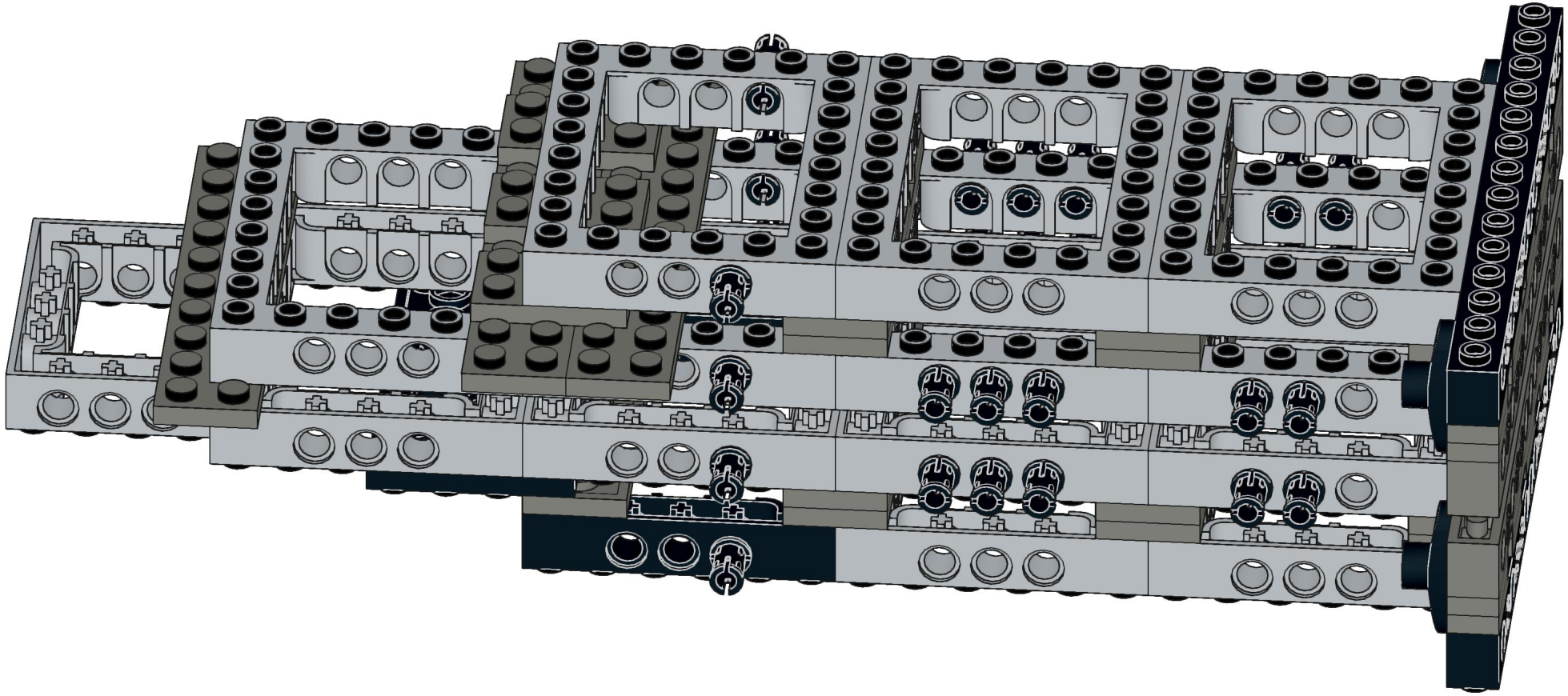

152

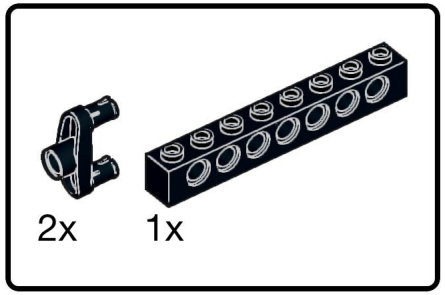

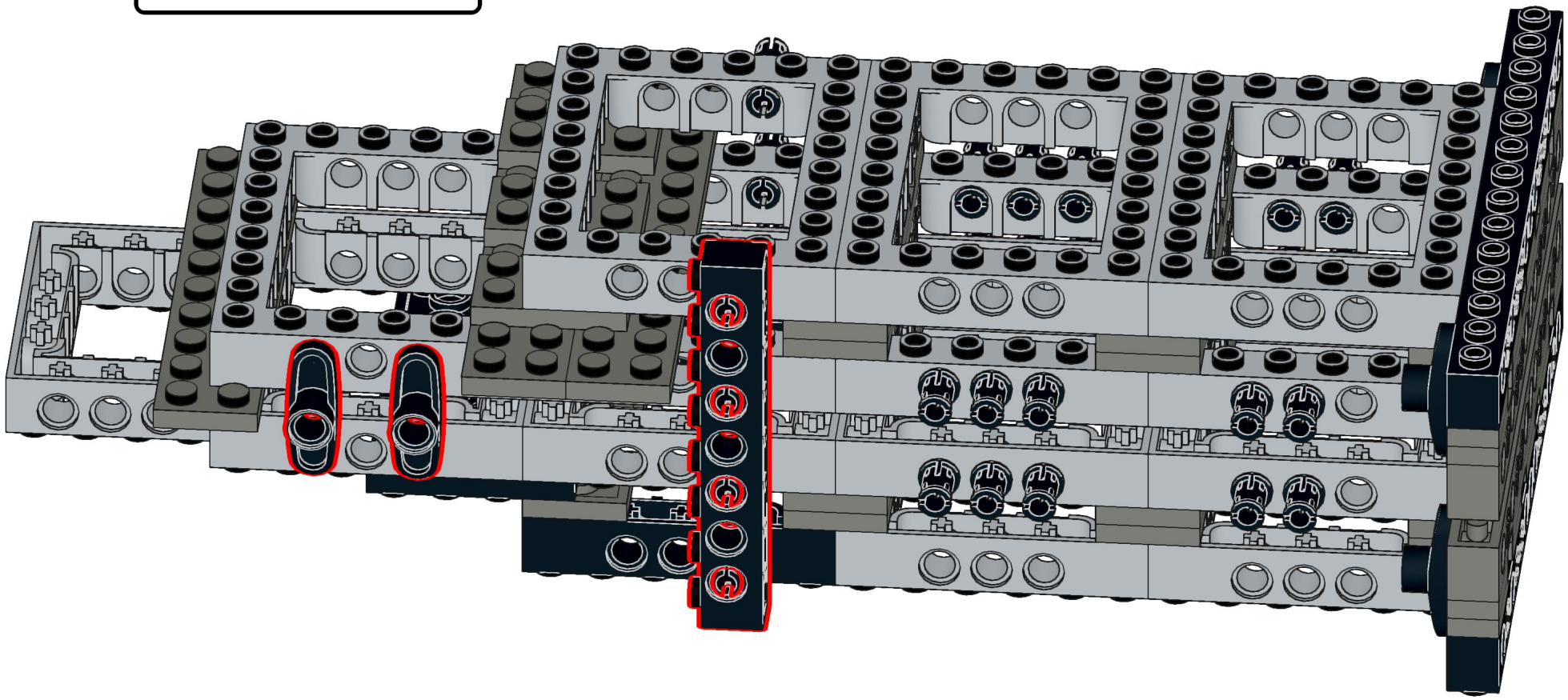

Designed by Michael Gertsch

153

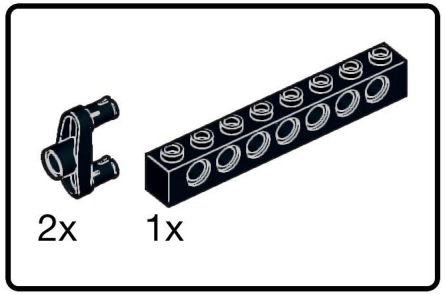

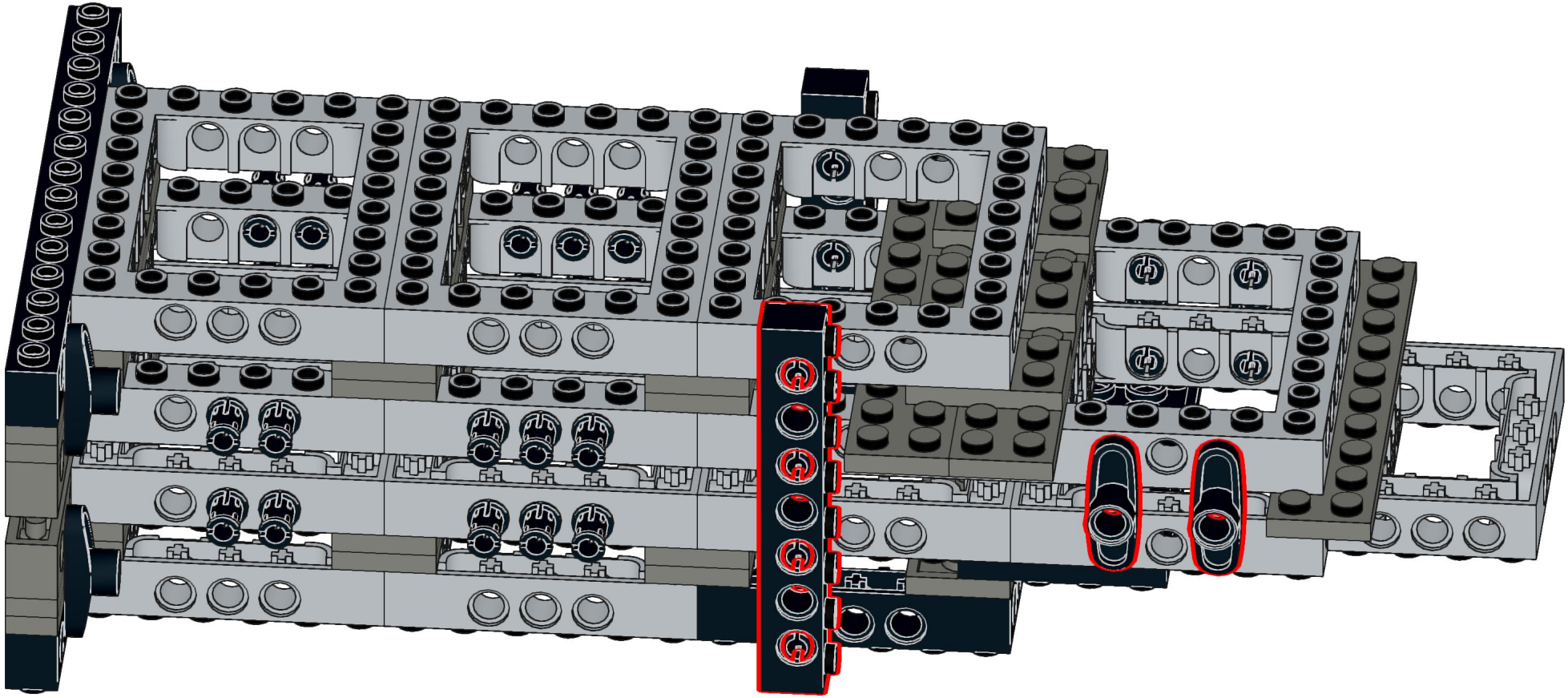

Designed by Michael Gertsch

154

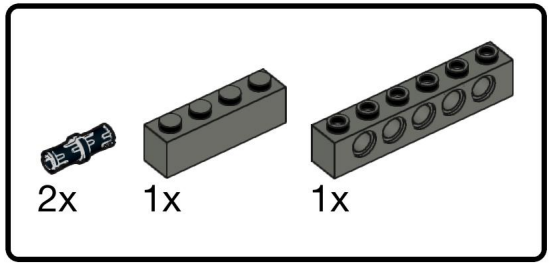

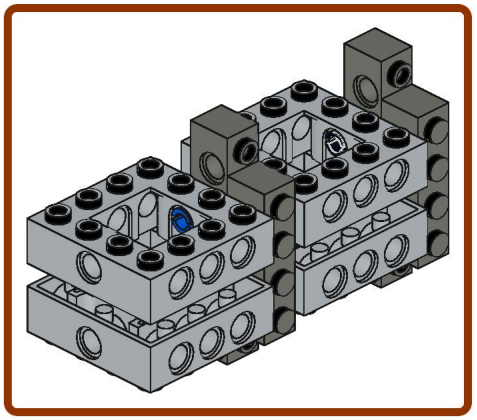

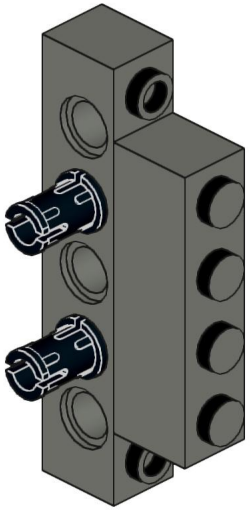

Designed by Michael Gertsch

155

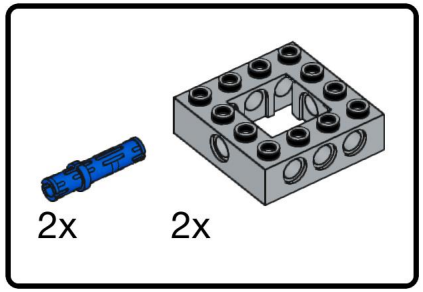

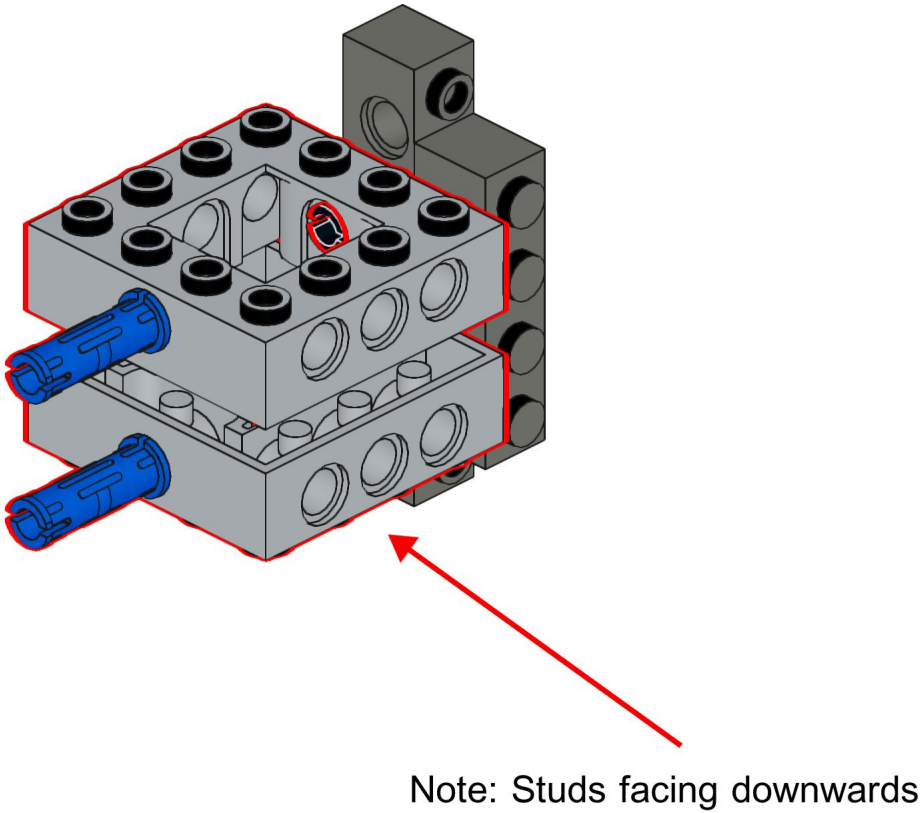

Designed by Michael Gertsch

156

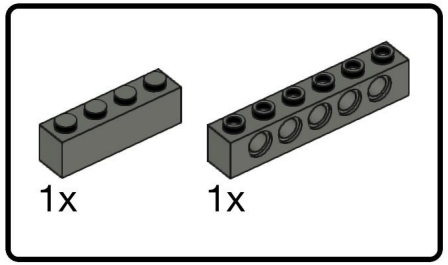

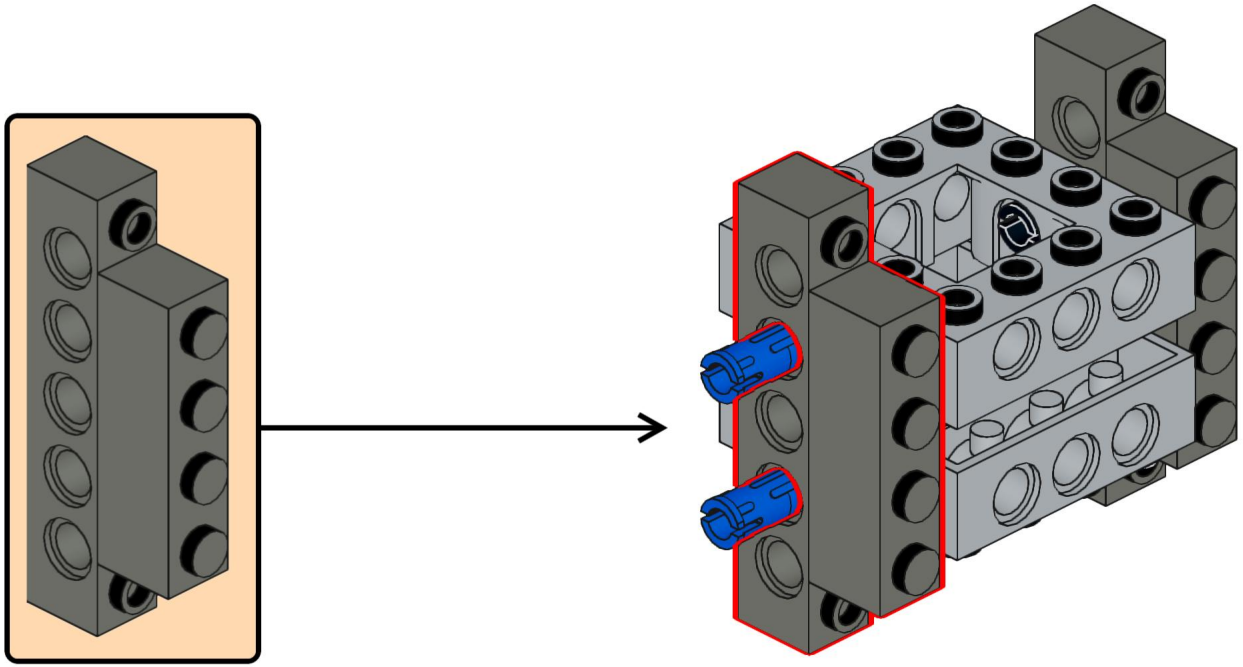

Designed by Michael Gertsch

157

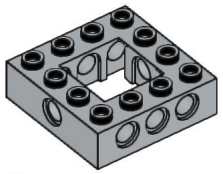

2x

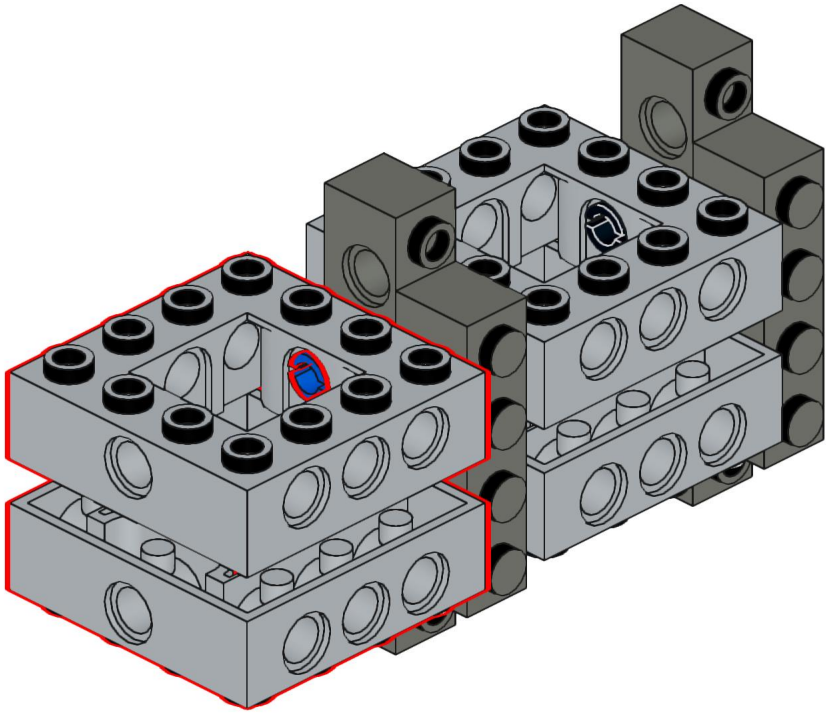

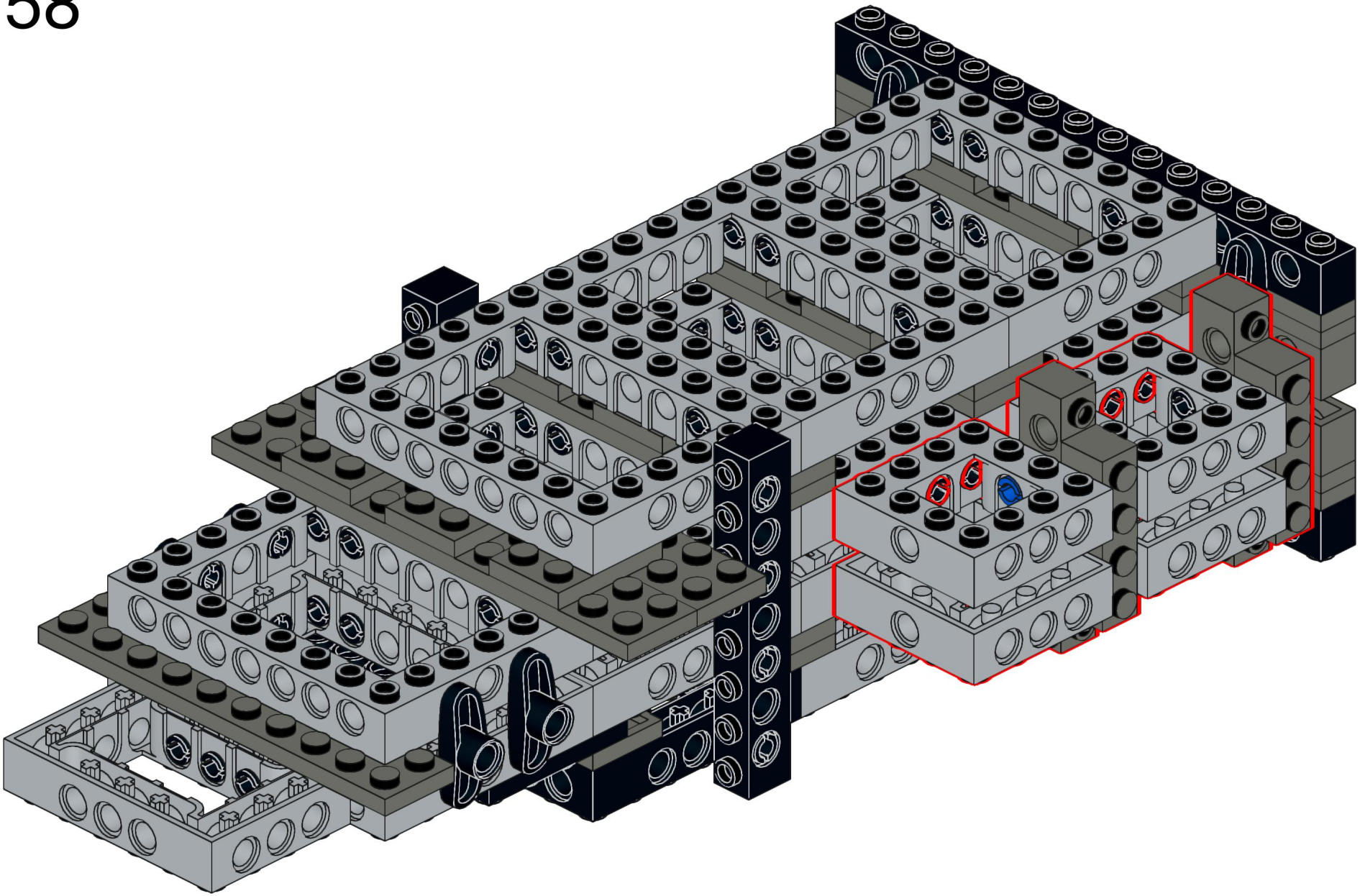

159

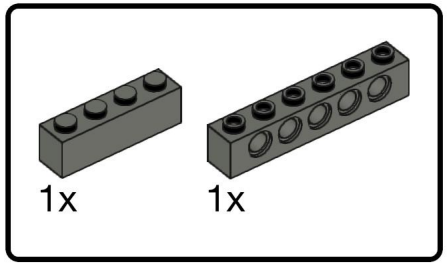

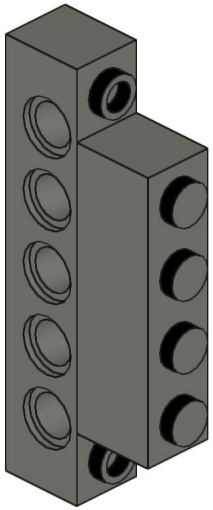

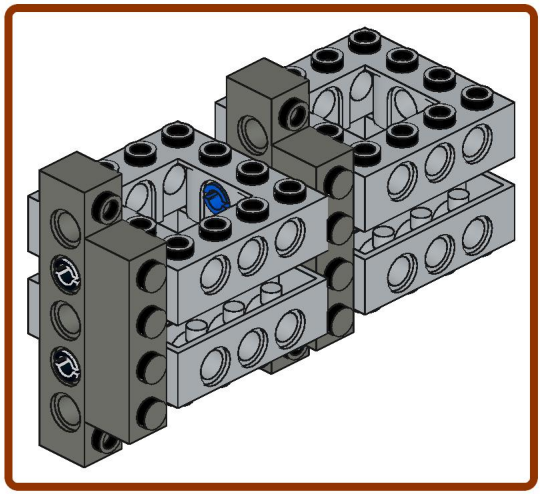

Designed by Michael Gertsch

160

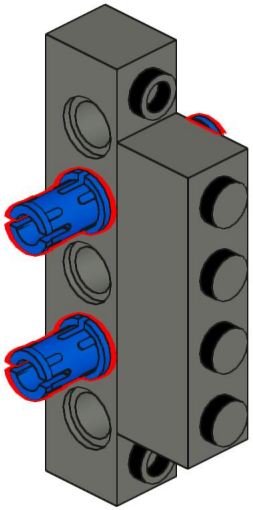

Designed by Michael Gertsch

161

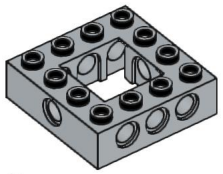

2x

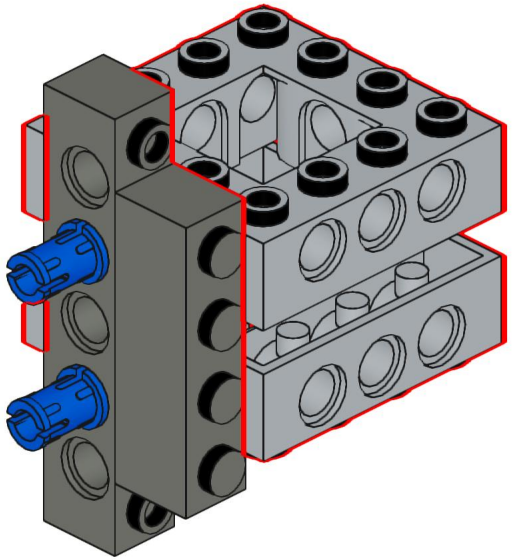

162

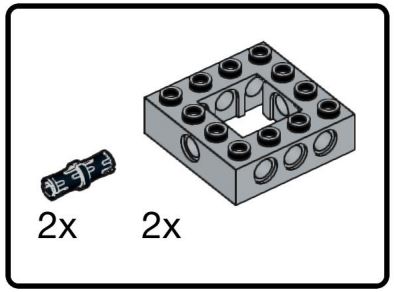

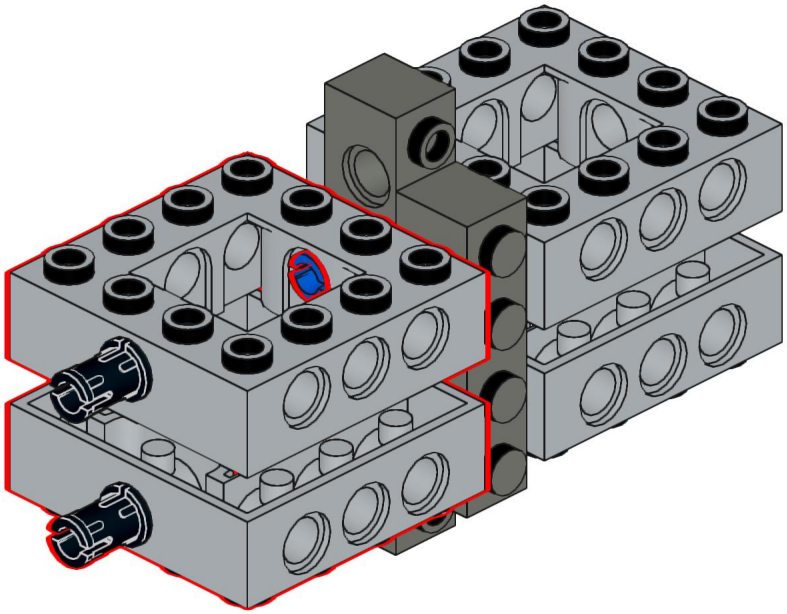

163

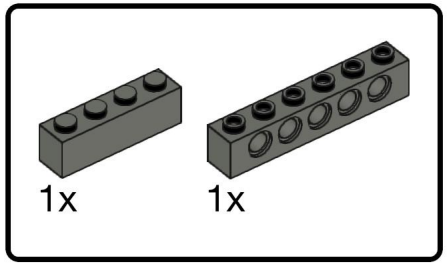

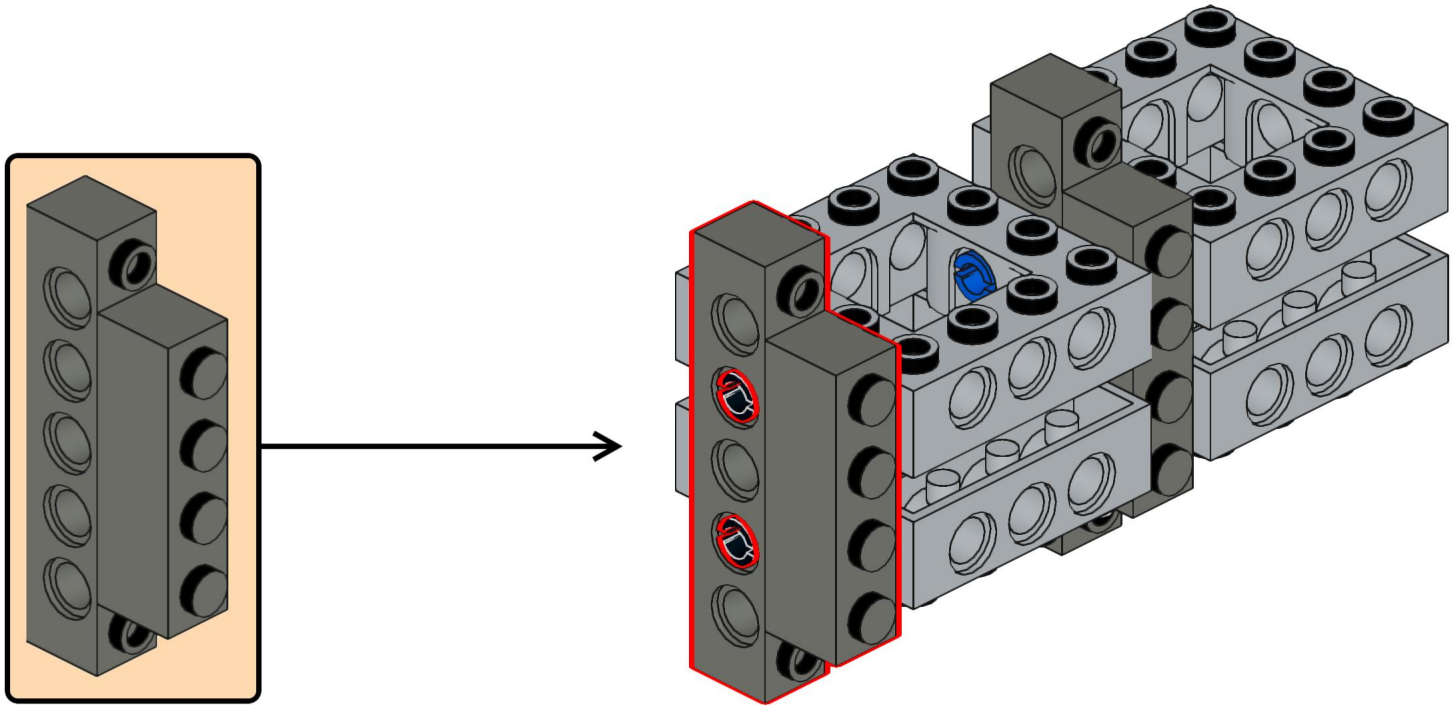

Designed by Michael Gertsch

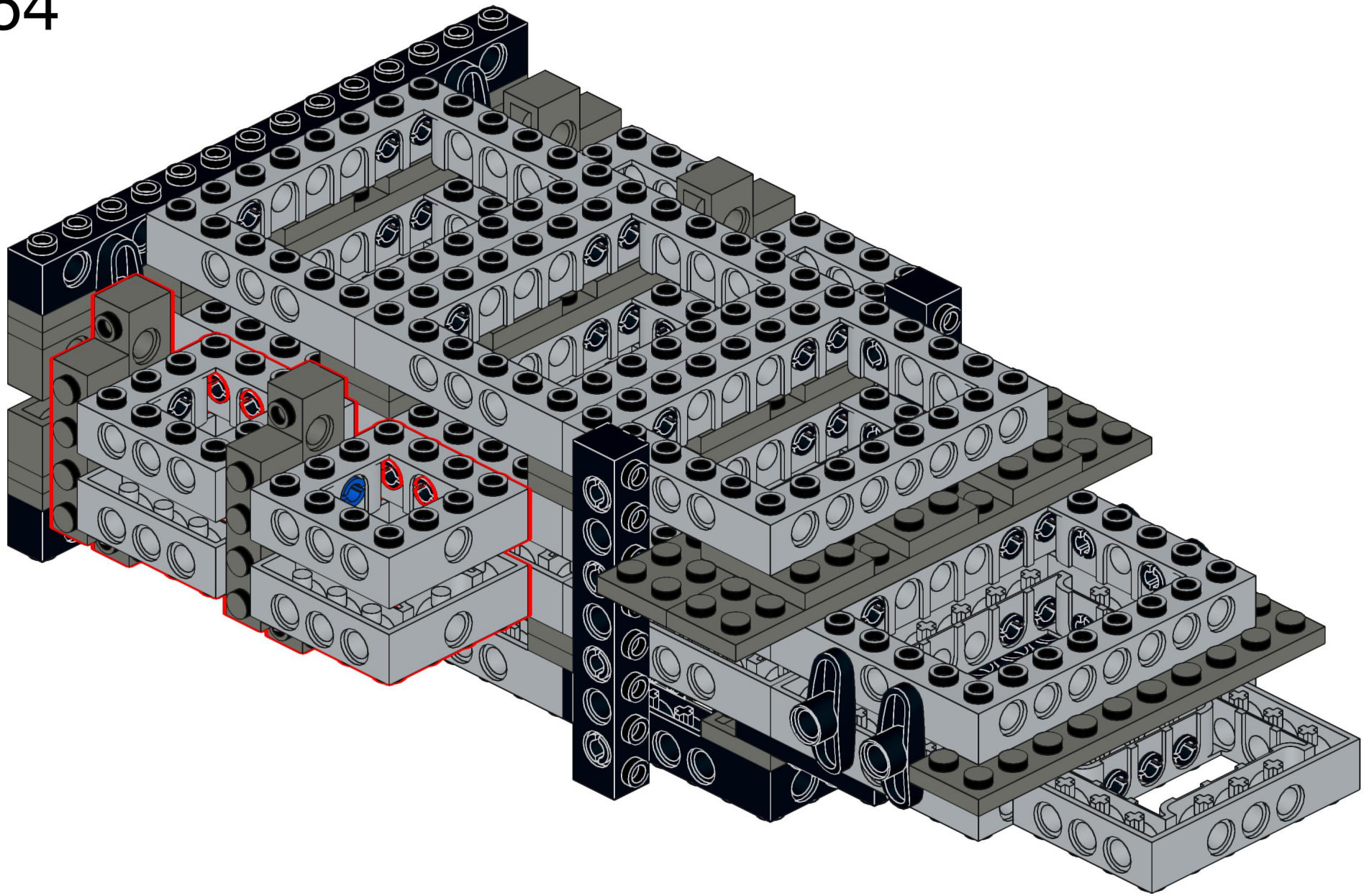

165

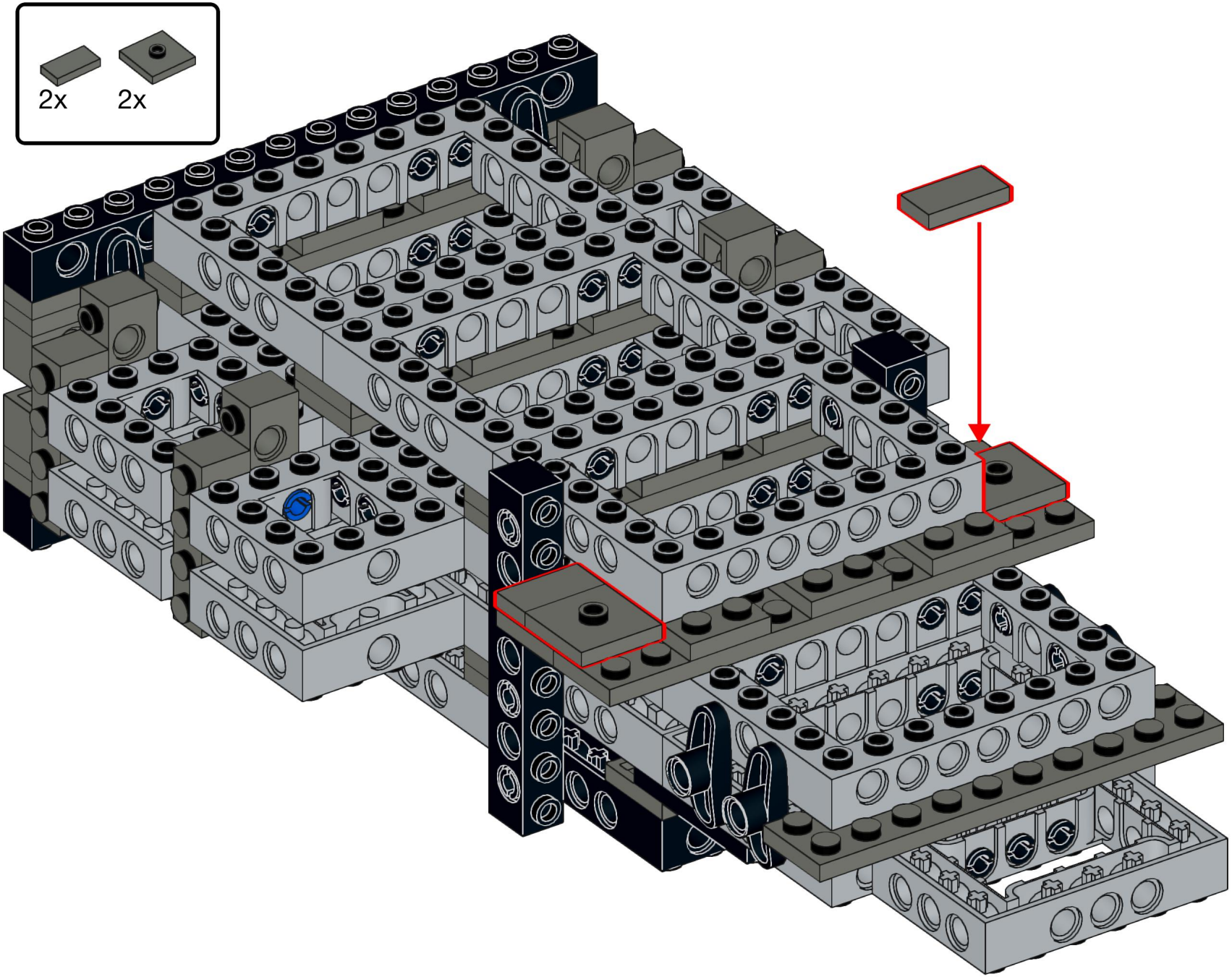

Designed by Michael Gertsch

166

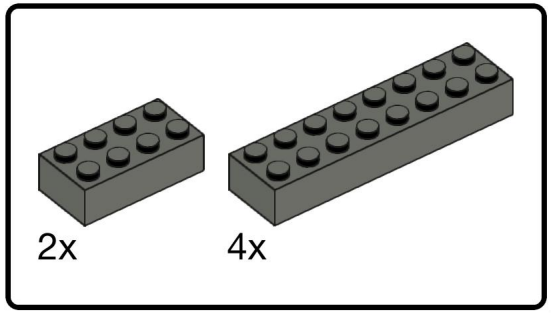

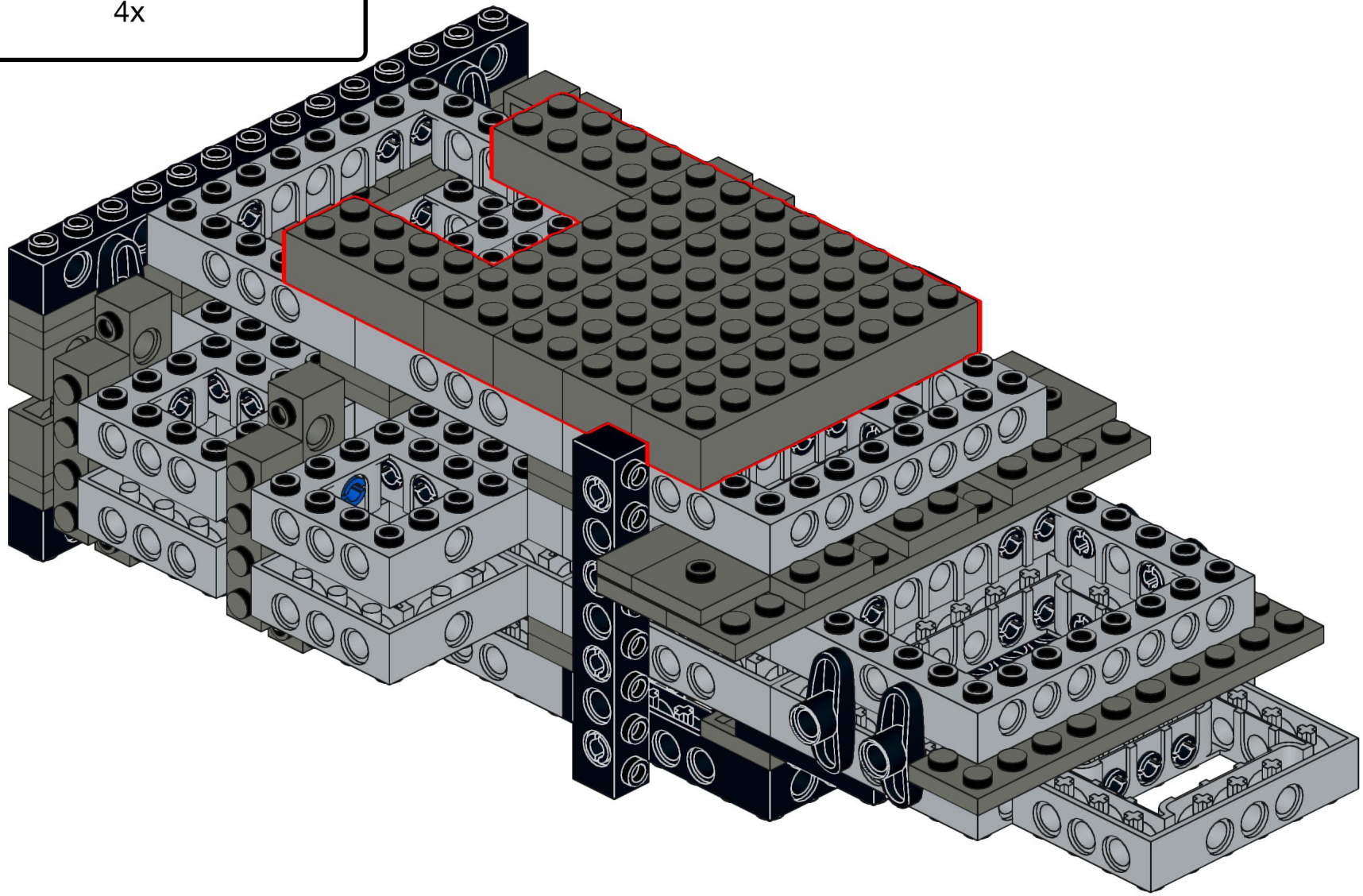

Designed by Michael Gertsch

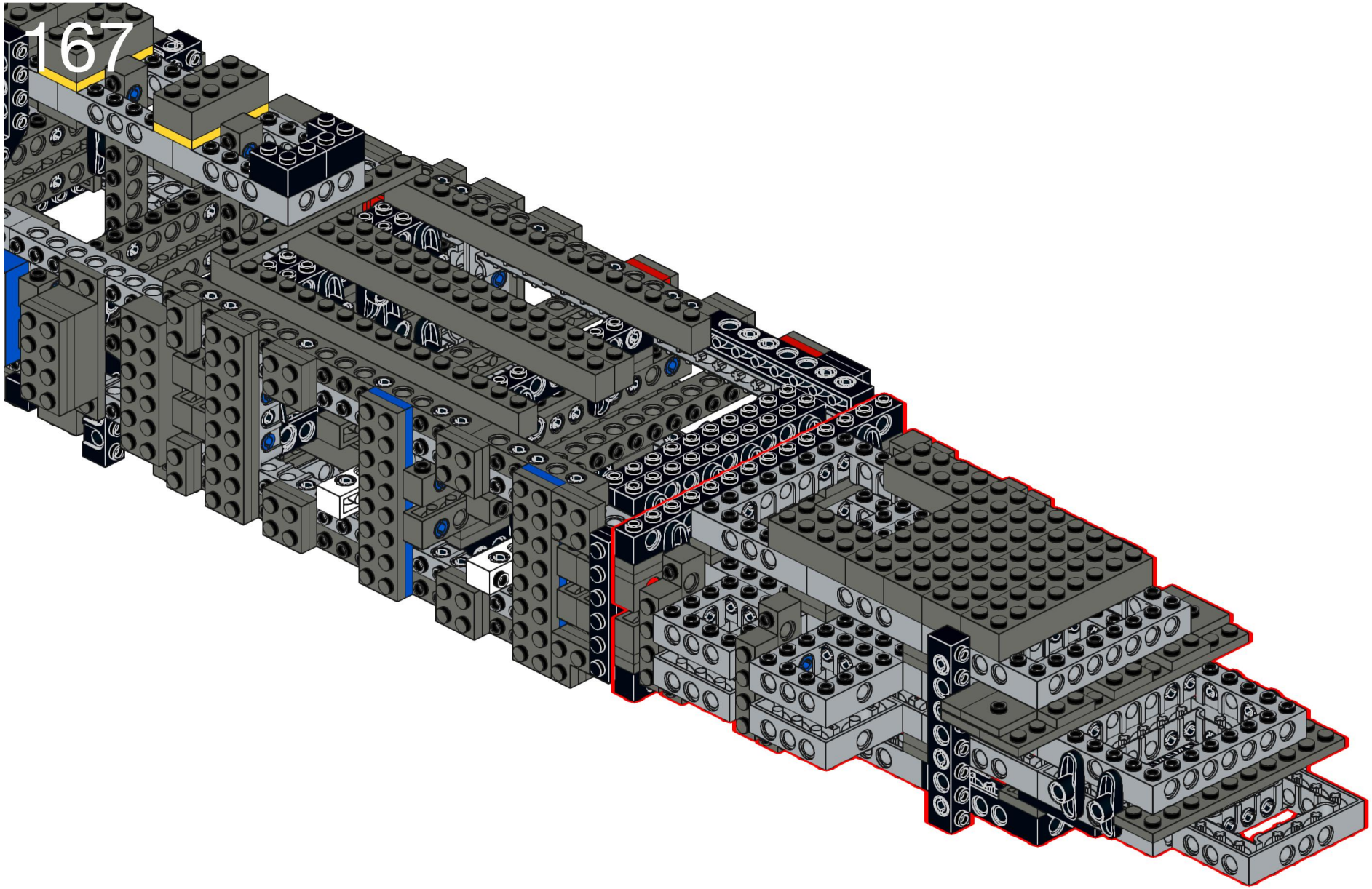

Designed by Michael Gertsch

168

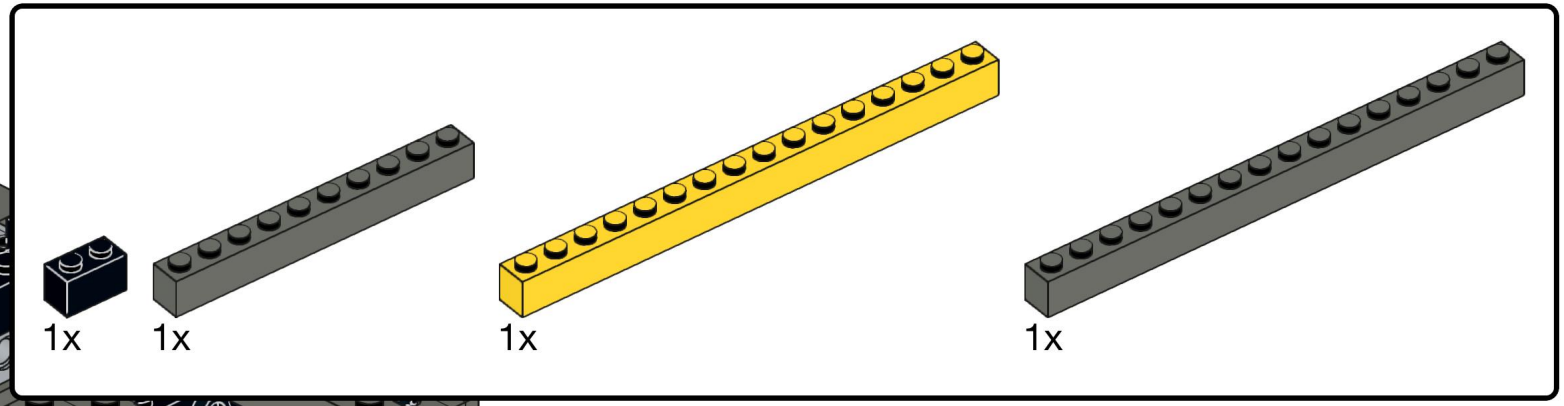

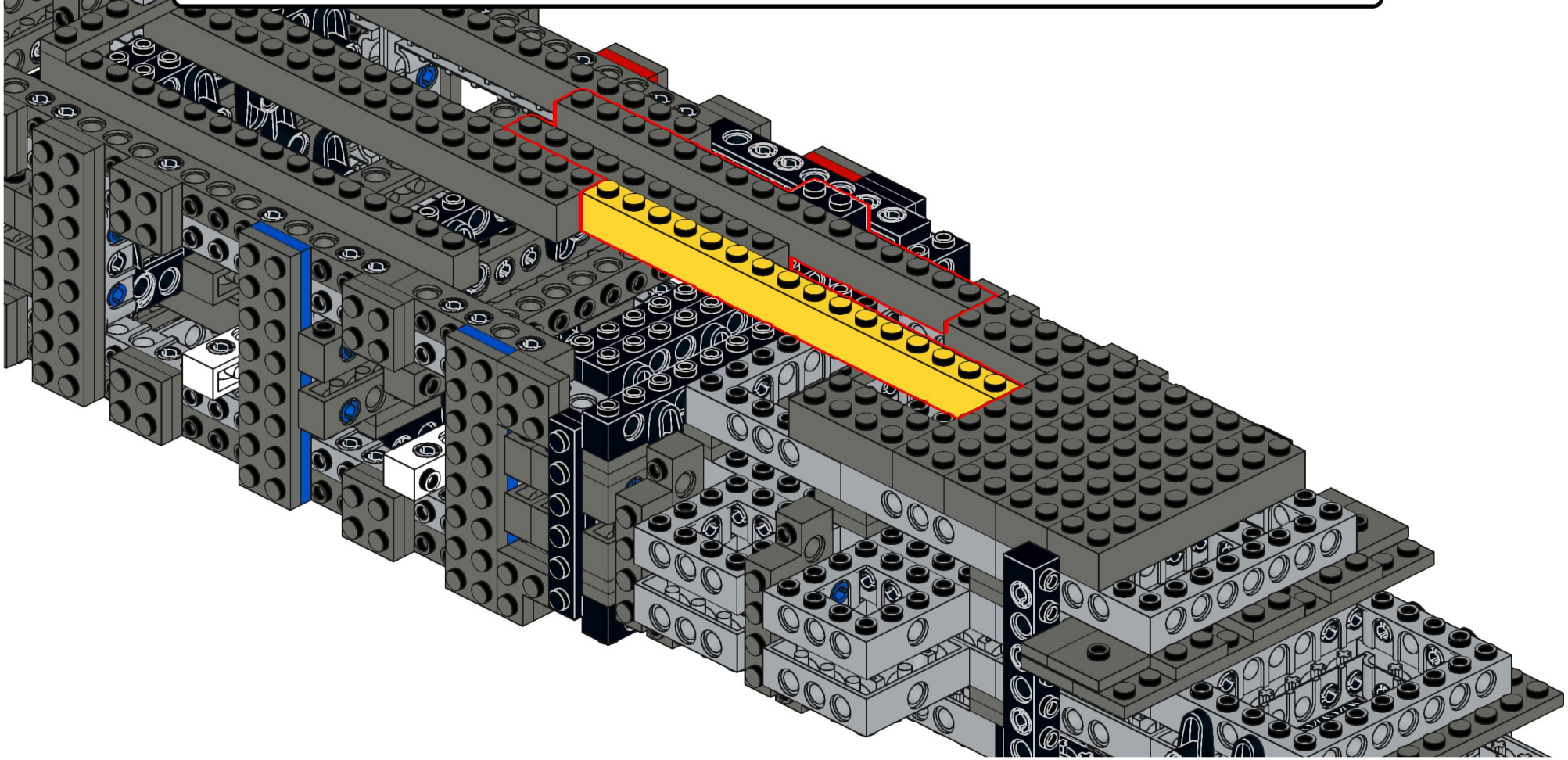

Designed by Michael Gertsch

169

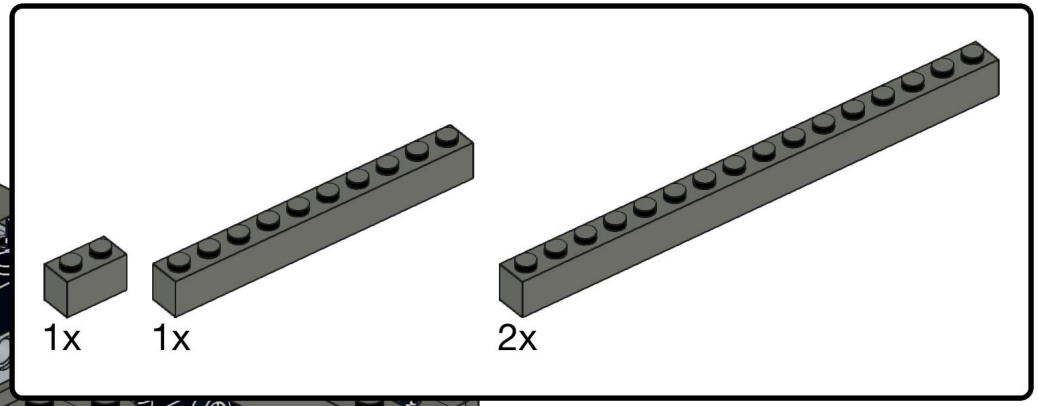

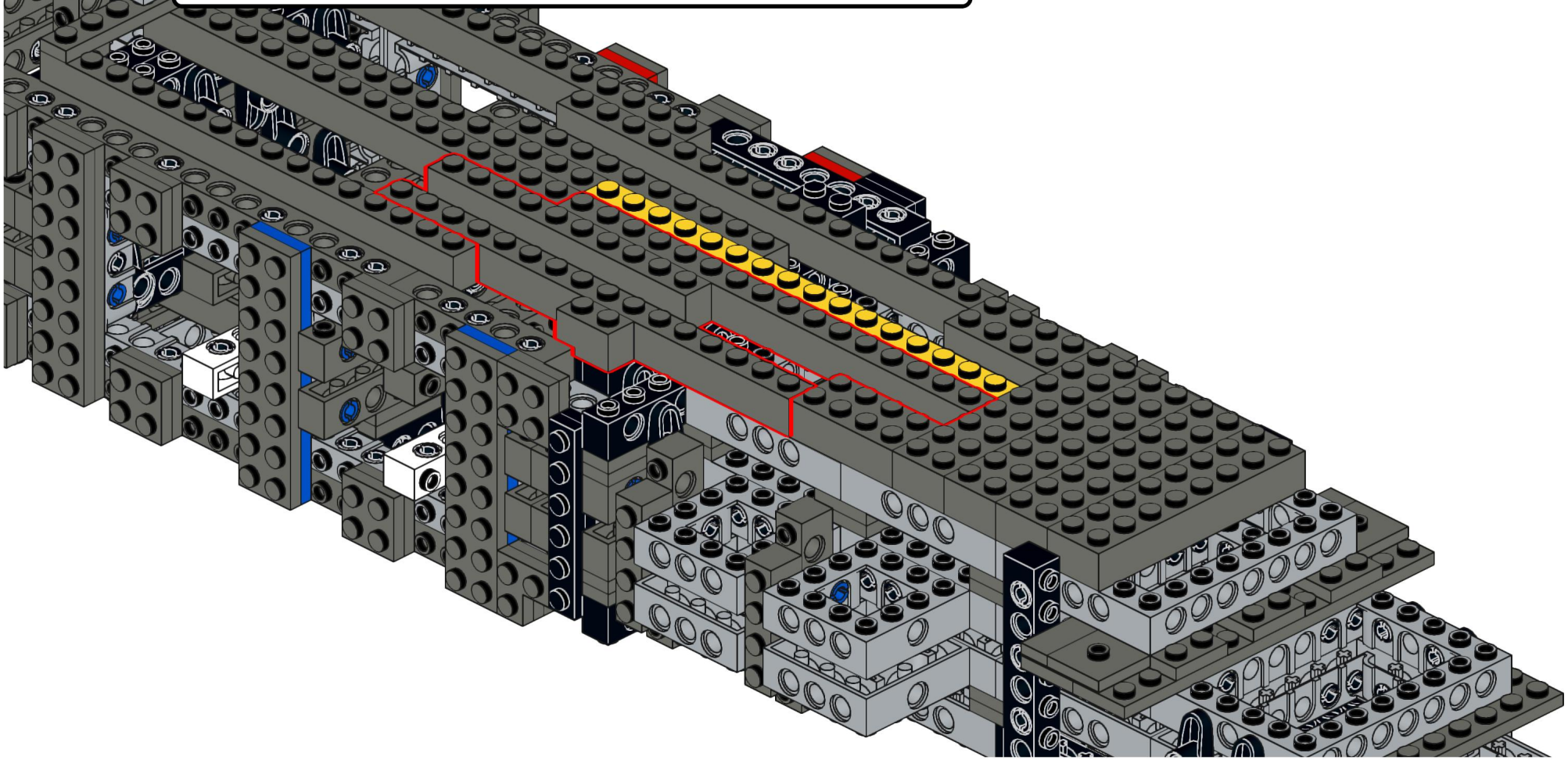

Designed by Michael Gertsch

170

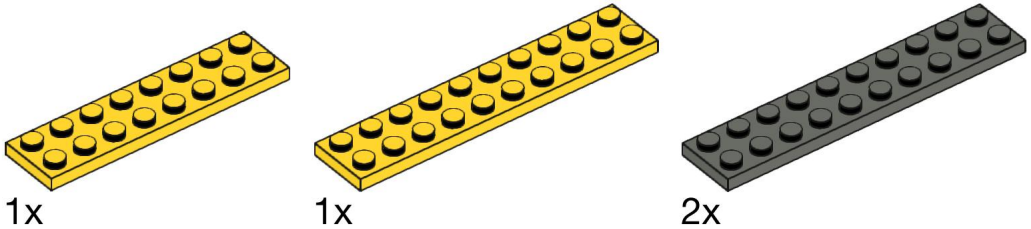

Designed by Michael Gertsch

171

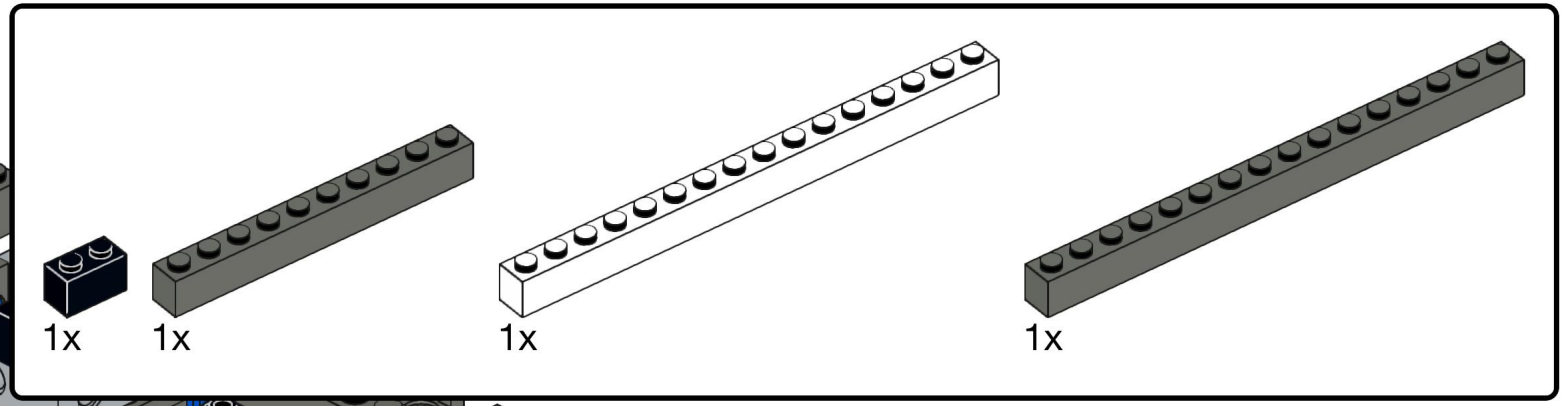

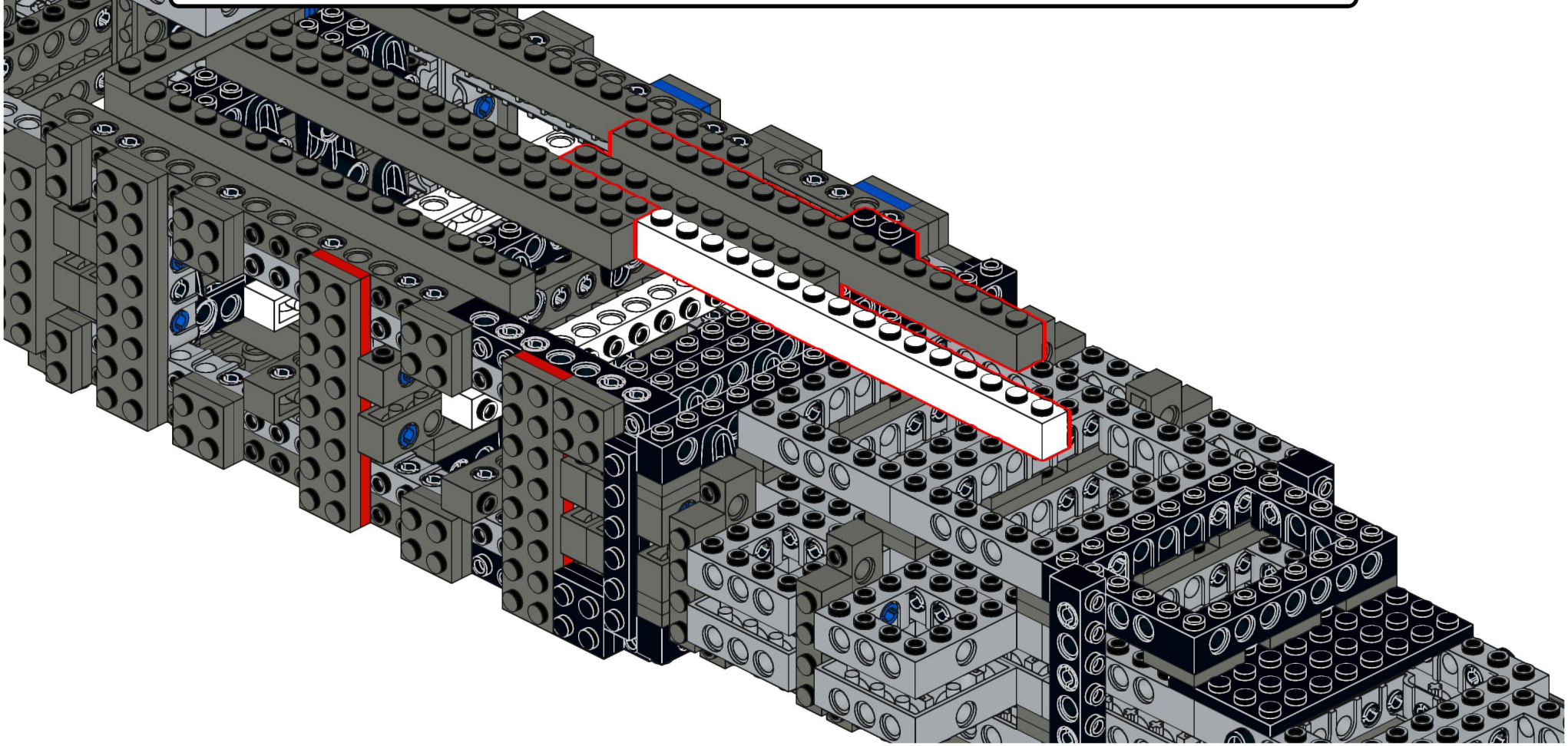

Designed by Michael Gertsch

172

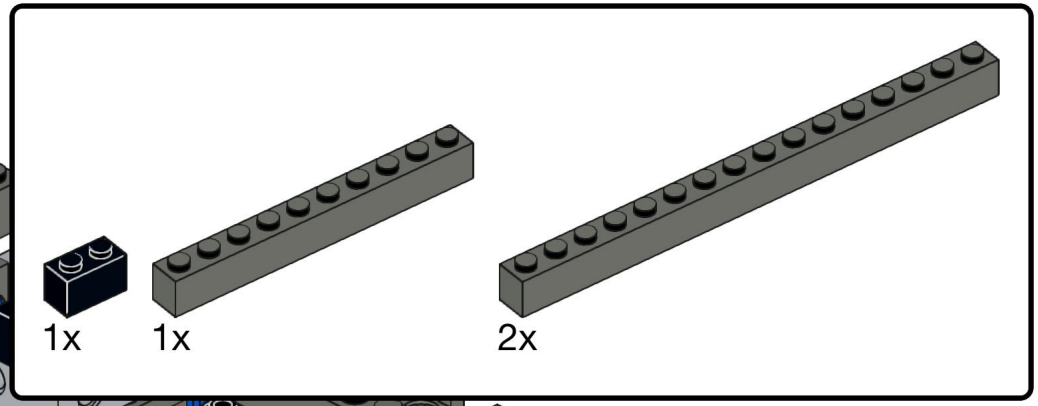

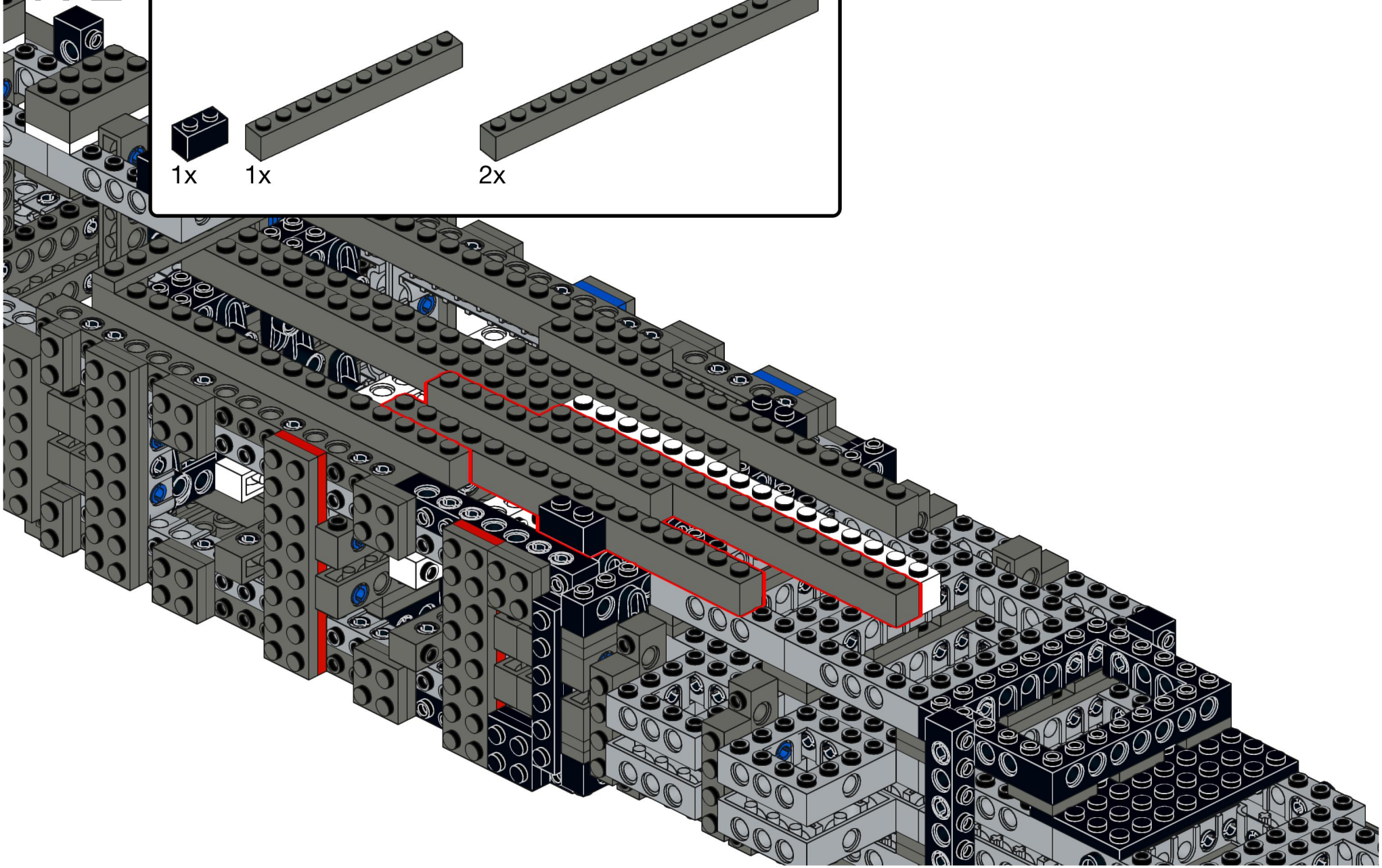

Designed by Michael Gertsch

173

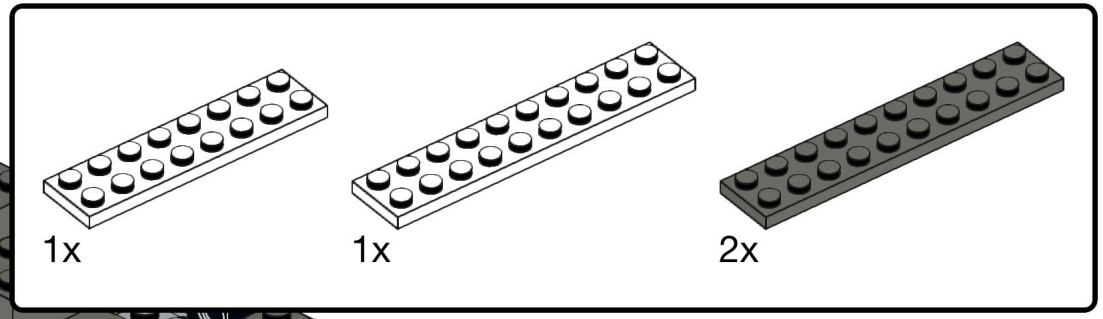

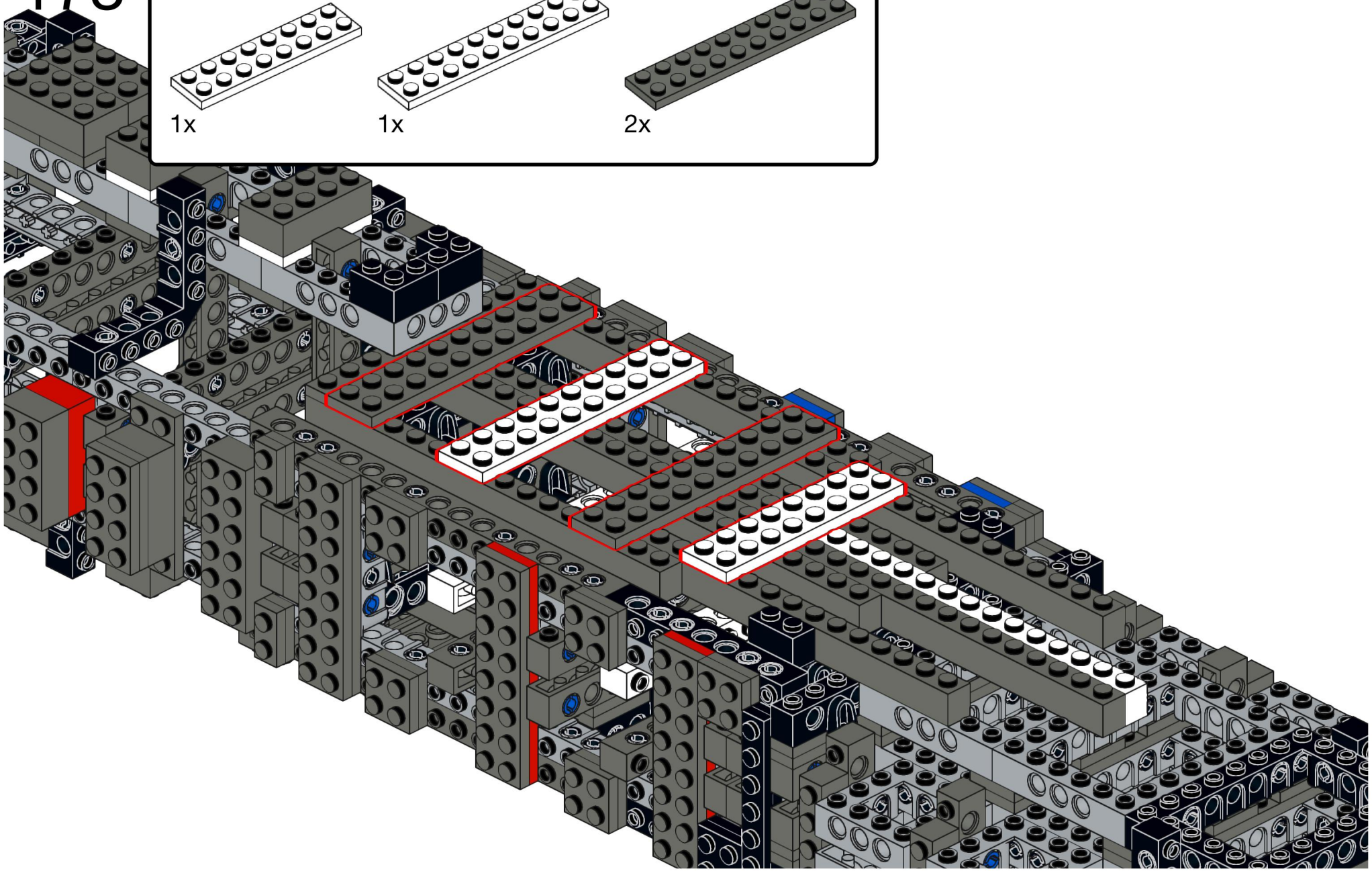

Designed by Michael Gertsch