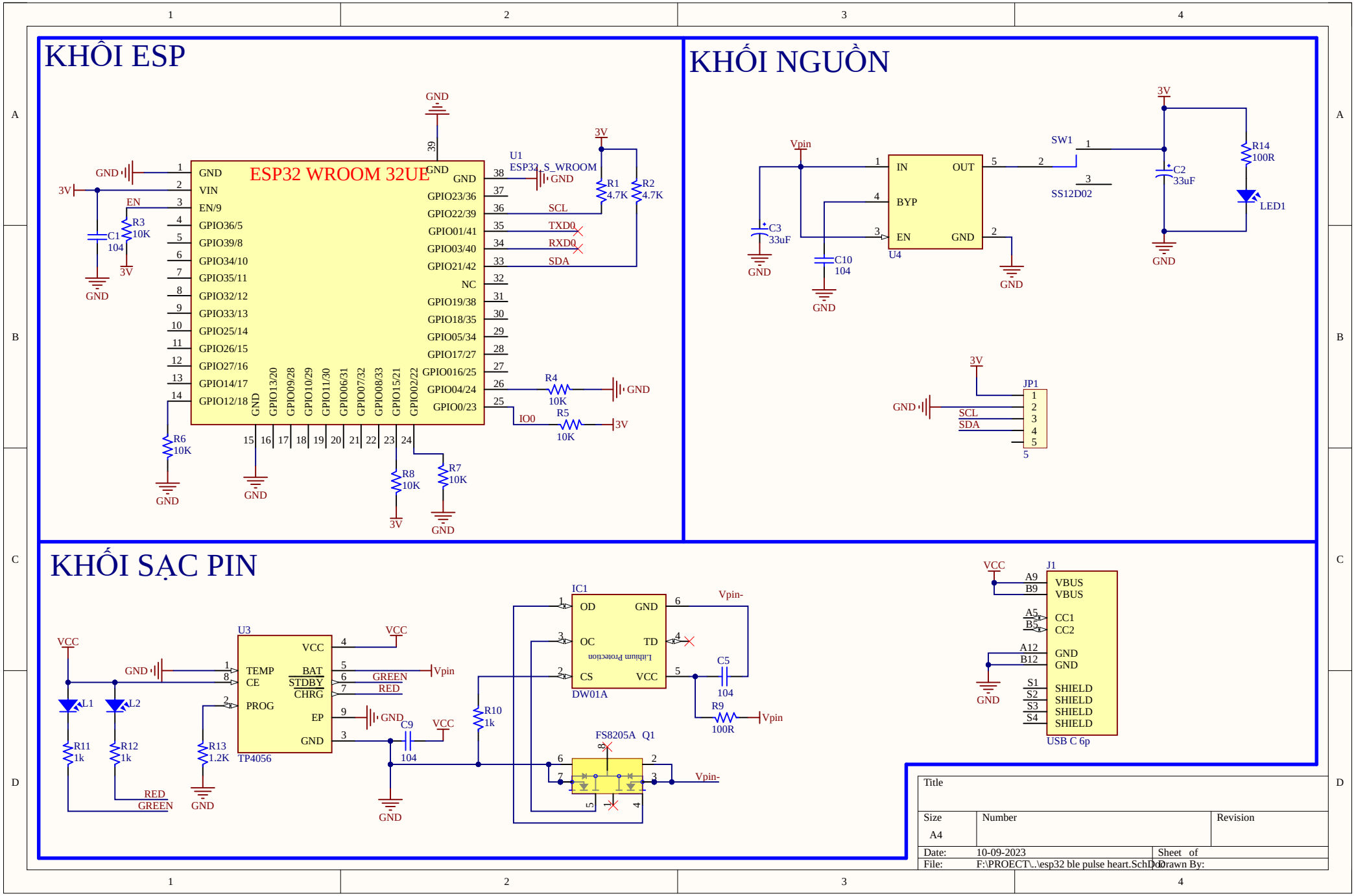
KHỐI ESP
ESP32 WROOM 32UE
U1
ESP32_S_WROOM
GND
VIN
EN/9
GPIO36/5
GPIO39/8
GPIO34/10
GPIO35/11
GPIO32/12
GPIO33/13
GPIO25/14
GPIO26/15
GPIO27/16
GPIO14/17
GPIO12/18
GPIO23/36
GPIO22/39
GPIO01/41
GPIO03/40
GPIO21/42
NC
GPIO19/38
GPIO18/35
GPIO05/34
GPIO17/27
GPIO016/25
GPIO04/24
GPIO0/23
GPIO13/20
GPIO09/28
GPIO10/29
GPIO11/30
GPIO06/31
GPIO07/32
GPIO08/33
GPIO15/21
GPIO02/22
SCL
TXD0
RXD0
SDA
IO0
EN
3V
R1 4.7K
R2 4.7K
R3 10K
C1 104
R4 10K
R5 10K
R6 10K
R7 10K
R8 10K
KHỐI NGUỒN
Vpin
IN
OUT
BYP
EN
GND
U4
SW1
SS12D02
C3 33uF
C10 104
C2 33uF
R14 100R
LED1
JP1
SCL
SDA
KHỐI SẠC PIN
U3
TP4056
TEMP
CE
PROG
VCC
BAT
STDBY
CHRG
EP
GREEN
RED
L1
L2
R11 1k
R12 1k
R13 1.2K
C9 104
R10 1k
IC1
DW01A
OD
OC
CS
TD
Lithium Protection
Vpin-
C5 104
R9 100R
FS8205A Q1
J1
USB C 6p
VBUS
CC1
CC2
SHIELD
A9
B9
A5
B5
A12
B12
S1
S2
S3
S4
Title
Size
A4
Number
Revision
Date: 10-09-2023
Sheet of
File: F:\PROECT\..\esp32 ble pulse heart.SchDoc
Drawn By: