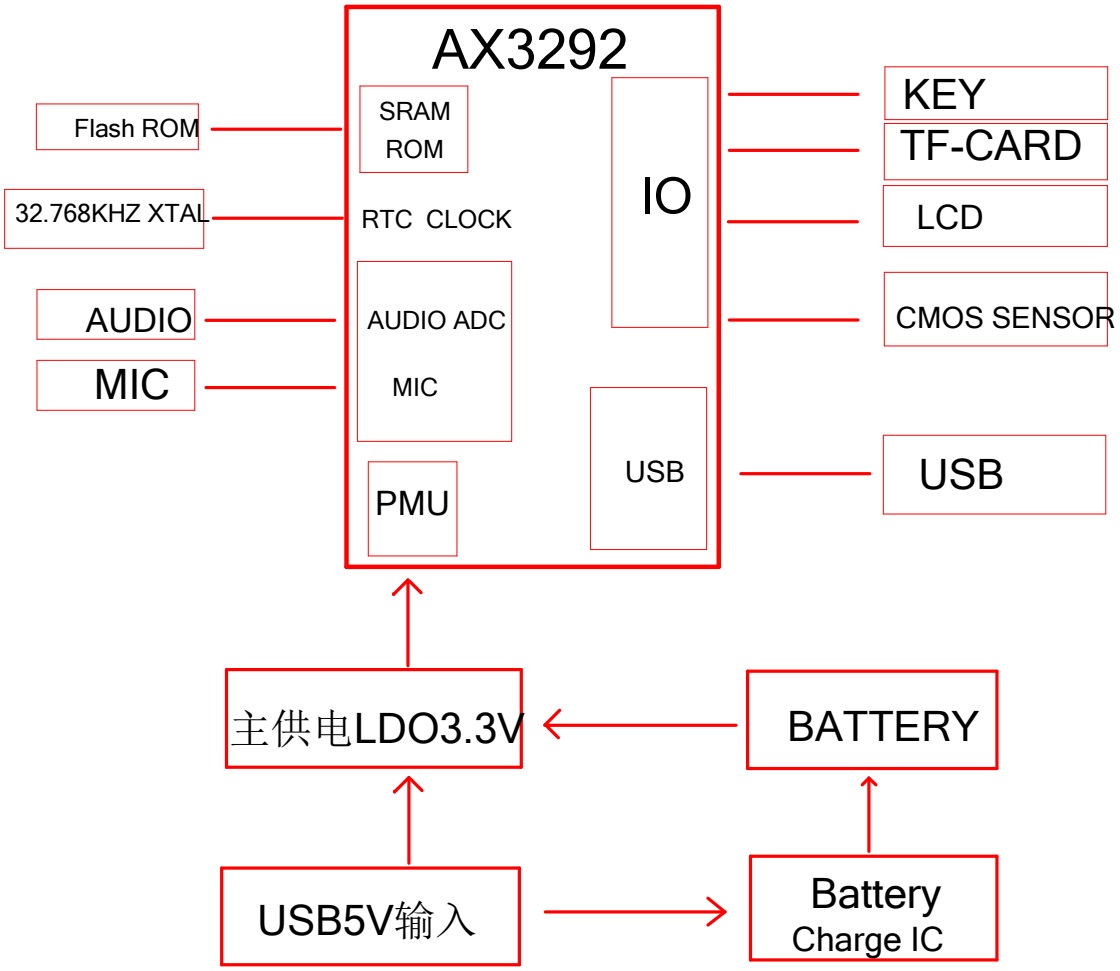
AX3292
SRAM
ROM
RTC CLOCK
AUDIO ADC
MIC
PMU
IO
USB
Flash ROM
32.768KHZ XTAL
AUDIO
MIC
KEY
TF-CARD
LCD
CMOS SENSOR
USB
主供电LDO3.3V
BATTERY
USB5V输入
Battery
Charge IC

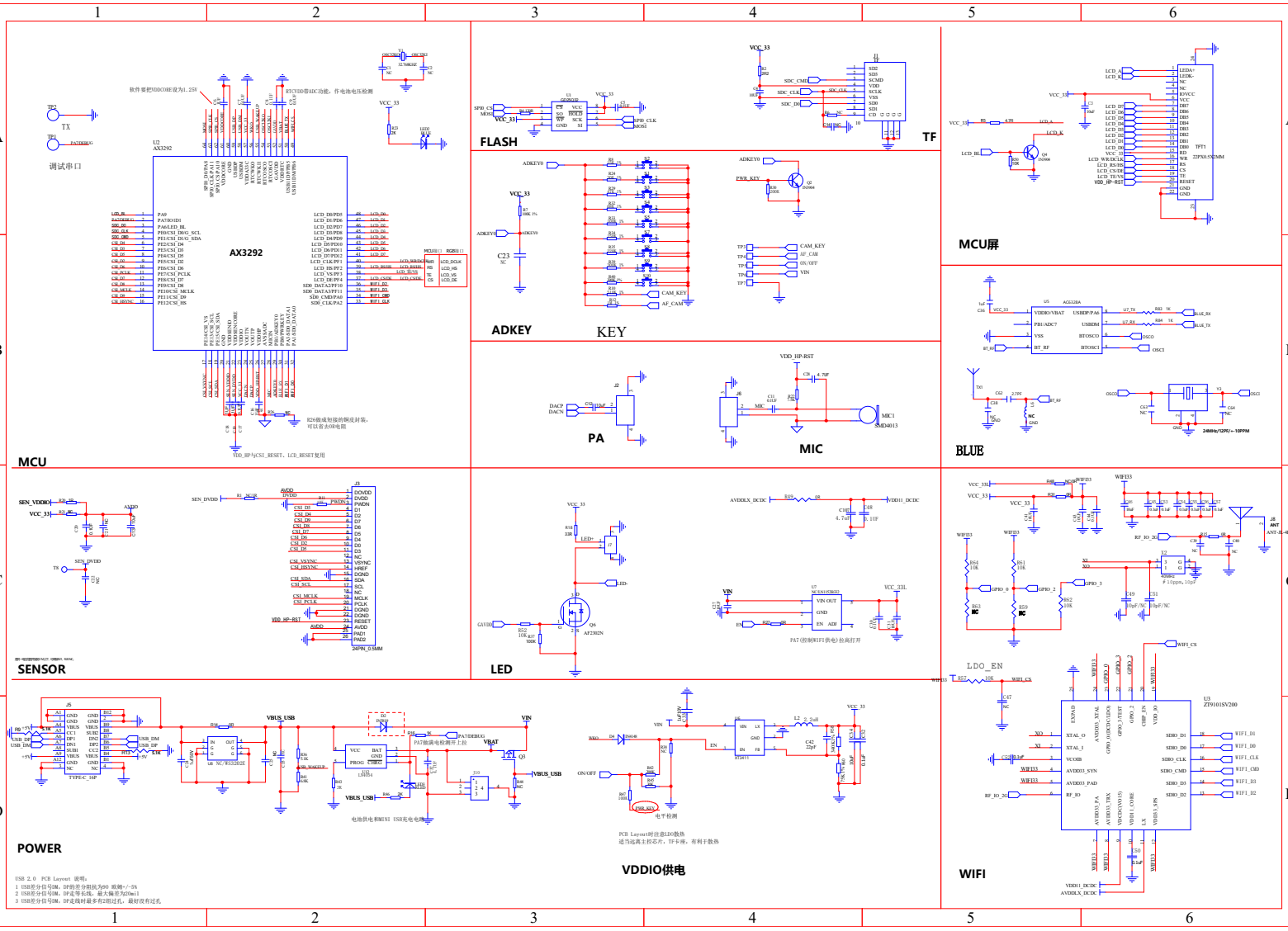
MCU
AX3292
调试串口
FLASH
TF
ADKEY
KEY
MCU屏
PA
MIC
BLUE
SENSOR
LED
POWER
VDDIO供电
WIFI