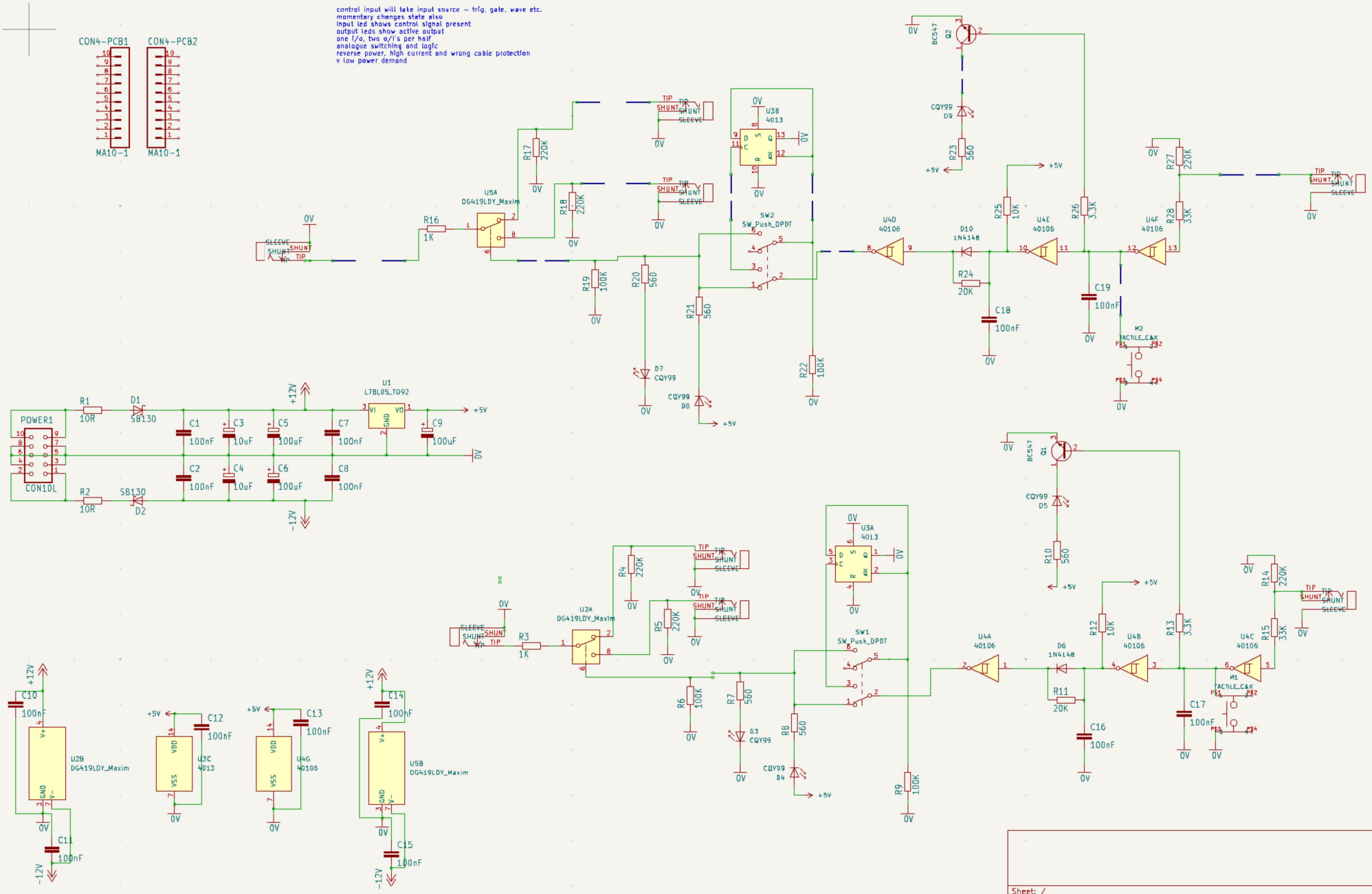

Sheet: /
File: dtswitch.kicad_sch

Title:

Size: User | Date: | Rev: