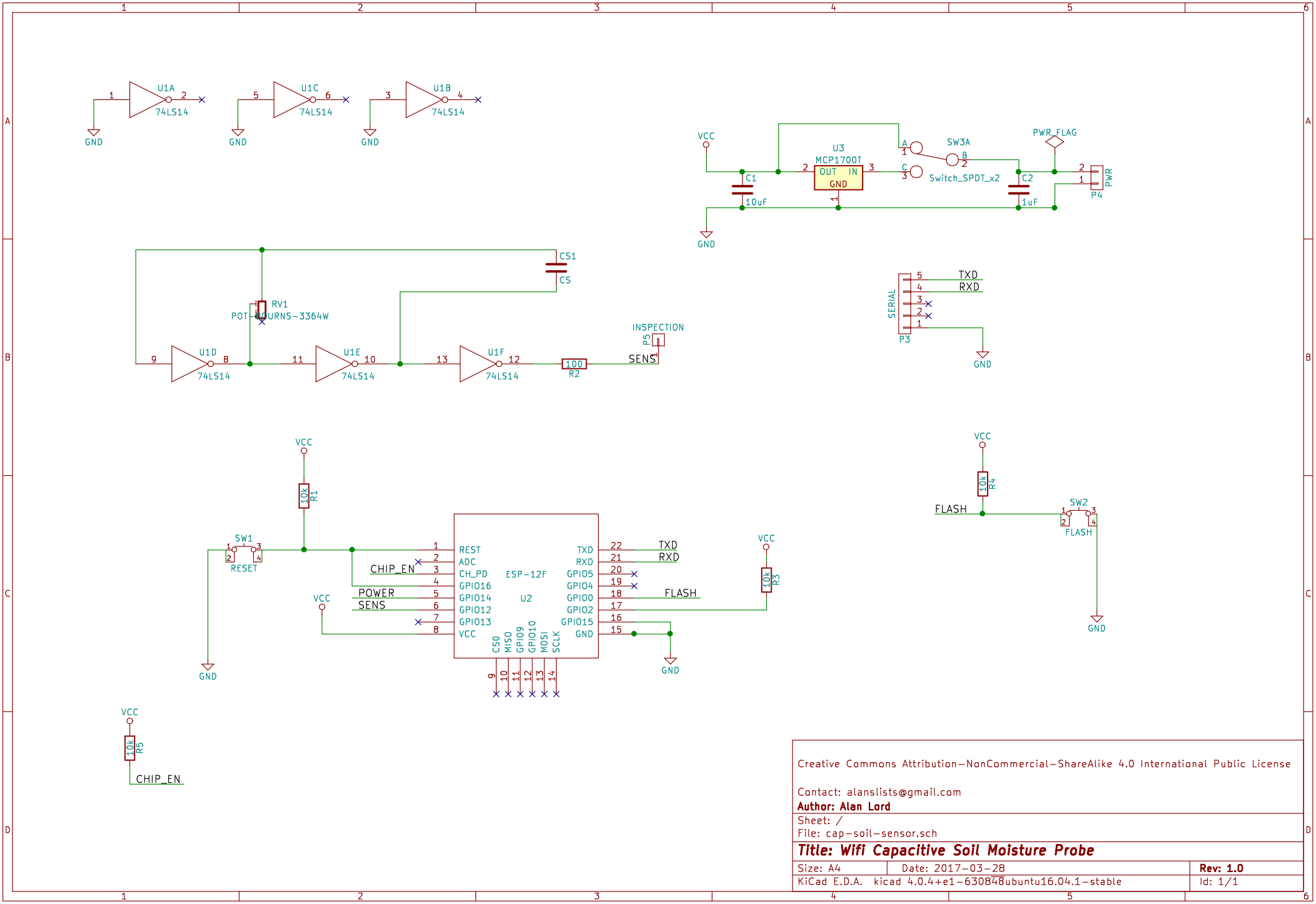

Creative Commons Attribution-NonCommercial-ShareAlike 4.0 International Public License

Contact: alanslists@gmail.com
Author: Alan Lord

Sheet: /
File: cap-soil-sensor.sch

Title: Wifi Capacitive Soil Moisture Probe

Size: A4	Date: 2017-03-28	**Rev: 1.0**
KiCad E.D.A. kicad 4.0.4+e1-630848ubuntu16.04.1-stable		Id: 1/1