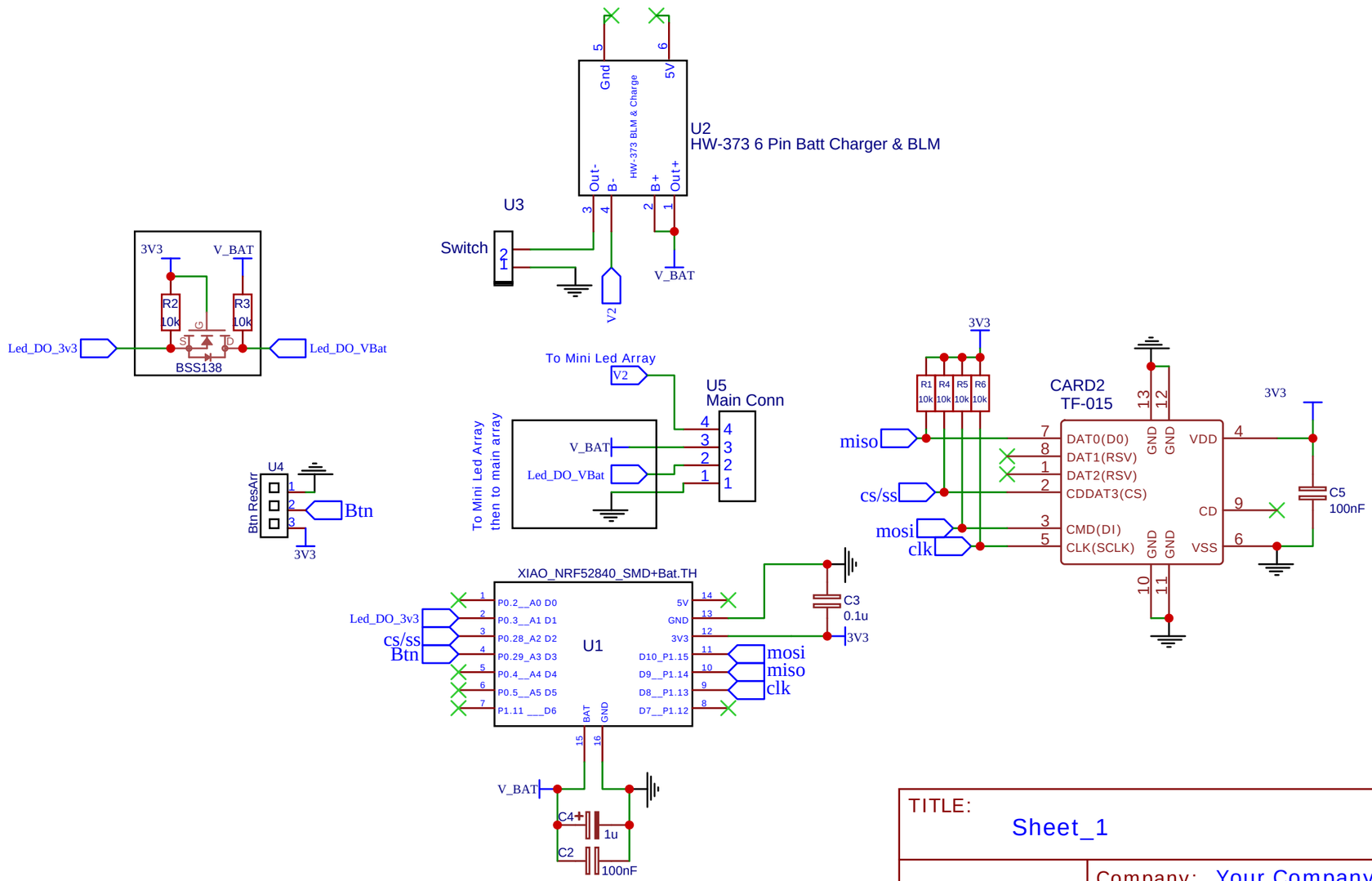

TITLE: Sheet_1	REV: 1.0
Company: Your Company	Sheet: 1/1
Date: 2022-11-19 Drawn By: LoadedDice	

嘉立创EDA