BDMI

# BIG DIPPER MACHINERY INDONESIA

bigdipper.official  bigdipper.official  www.alatberat.bdmi.co.id

BDMG  SYZG HEAVY INDUSTRY  LUGONG  LGMA

Dipindai dengan CamScanner

# SEKILAS BDMI

PT Big Dipper Machinery Indonesia merupakan supplier alat berat untuk industri di sektor pertambangan, pertanian, konstruksi dan kehutanan. Big Dipper Machinery Indonesia juga merupakan distributor tunggal beberapa produsen alat berat dengan merek dagang BDMG, Lugong, SYZG, dan LGMA. Kami menjual berbagai jenis alat berat seperti Wheel Loader, Excavator, Self Loading Concrete Mixer, Backhoe Loader, Mini Dumper Crawler, Wheel Dumper, Wheel Tractor. Memiliki kantor Pusat di Jakarta dan 18 kantor cabang di Indonesia untuk mempermudah penjualan dan layanan purna jual ke seluruh wilayah Indonesia.

# PRODUCT SUPPORT

## SERVICE SUPPORT

BDMI Menyediakan
Jasa Mekanik yang tersebar
di Seluruh Indonesia

## SPAREPARTS

BDMI Menjamin Ketersediaan
Sparepart & Pengiriman
ke seluruh Indonesia

## SCAN BARCODE

Untuk informasi dan
pemesanan unit atau
kritik dan saran anda agar
kami menjadi lebih baik

## BRANCH

BDMI Memiliki 18 Cabang
yang tersebar
di seluruh Indonesia

## TRAINING OPERATOR & COMMSIONING

BDMI Memberikan
Training Operator
secara Gratis



Dipindai dengan CamScanner

# EXCAVATOR BDMG-BD9225

## TECHINICAL PARAMETER

| | | |
|---|---|---|
| BASIC | Operating Weight | 21.800 kg |
| | Boom Length | 5675 mm |
| | Arm Length | 2.920 mm |
| | Standard Bucket | 1.0 $m^3$ |
| | Max. Travel Speed | 3.1/5.3 km/h |
| | Max. Swing Speed | 13.5 rpm |
| | Grade Ability | $35^0$ (70%) |
| | Ground Pressure | 47.5 kPa |
| | Max. Traction Force | 218 kN |
| ENGINE | Engine Model | Cummins 6BTAA5.9-C150-II |
| | Rated Power | 112 kW / 2.000 rpm |
| | Max. Torque | 614/1.500 N.m/rpm |
| | Displacement | 5.9 L |
| | Fuel Tank | 400 L |

| | | |
|---|---|---|
| HYDRAULIC | Max. Flow ( Total ) | 280x2 L/min |
| | Max. Working Pressure | 34.3/37 MPa |
| | Max. Pilot Pressure | 3.9 Mpa |
| | Max. Arm Digging Force | 107 kN (ISO) |
| | Max. Bucket Digging Force | 142 kN (ISO) |
| | Hrdraulic Oil Tank | 165/256 L |
| CHASSIS | Track Width | 600 mm |
| | Track Shoes Number | 47 (each side) |
| | Carrier Rollers Number | 2 (each side) |
| | Track Rollers Number | 8 (each side) |
| ELECTRIC | System Vollage | 24 V |
| | Battery Capacity | 24 V, 120 Ahx2 |



Dipindai dengan CamScanner

# PRODUCT FEATURES

- Cummins TDI 6-cylinder Engine. Strong Power, Fuel-efficient
- Three-stage Air & Fuel Filtering System
- Charge Air Cooling System with Parallel Radiator
- Advanced Hydraulic System with Function of Interflow & Re-activation, Swing Priority
- 8 inch LCD Display with Multi Purpose
- Camfortable ROPS Cabin with 2,7m³ Operational Space
- No Frame Cab Glasses to Enlarge Operation Field of View
- Heavty-duty Working Device with Strength Low Alloyed Steels
- Equiped with break pipeline

# OPTIONAL

- Breaking hammer & pipeline
- Work warning light
- Walking alarm
- MP3
- Top protecting net
- Front protecting net
- 700mm triple grouser shoes
- 800mm triple grouser shoes
- Track rubber block



Dipindai dengan CamScanner

# SIZE CHART

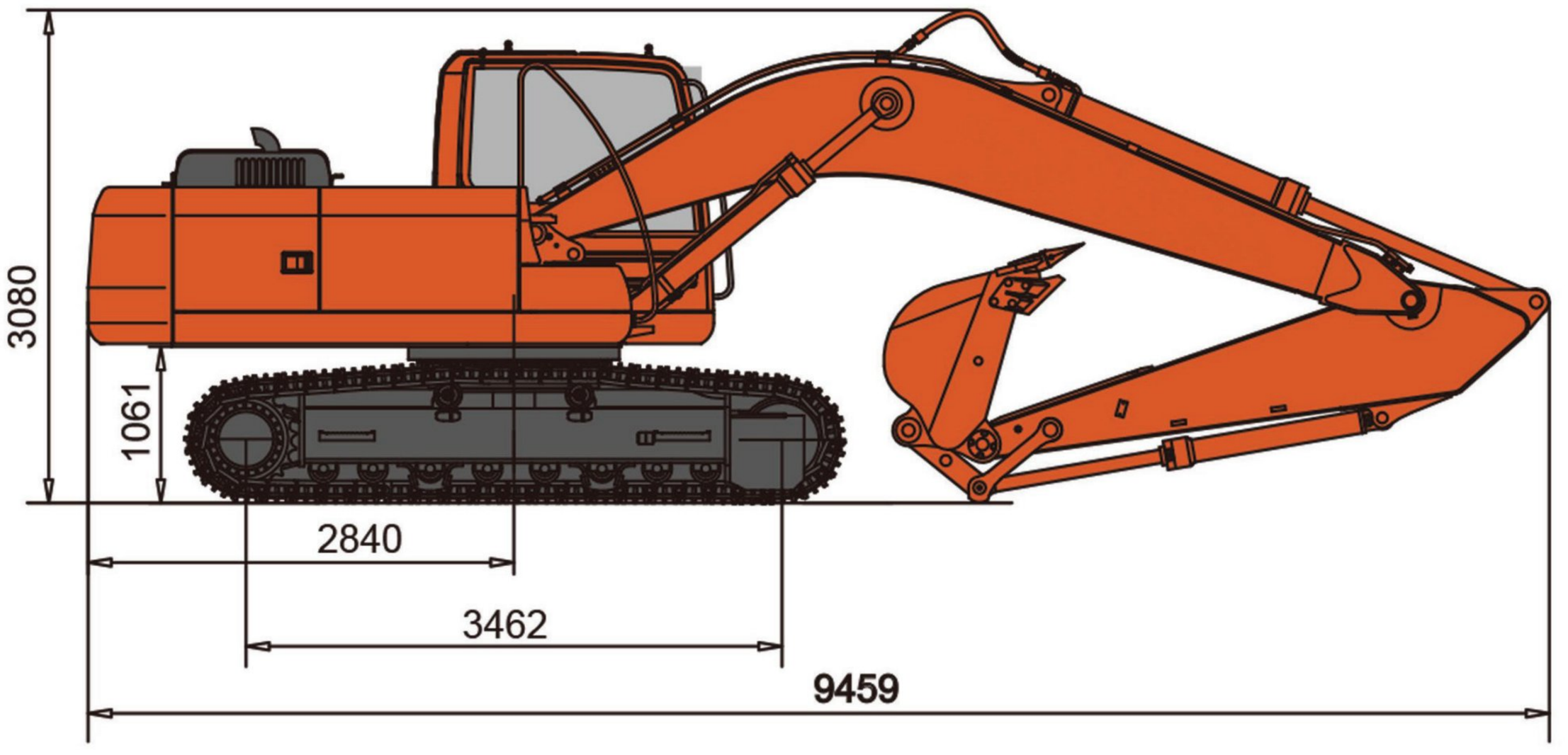


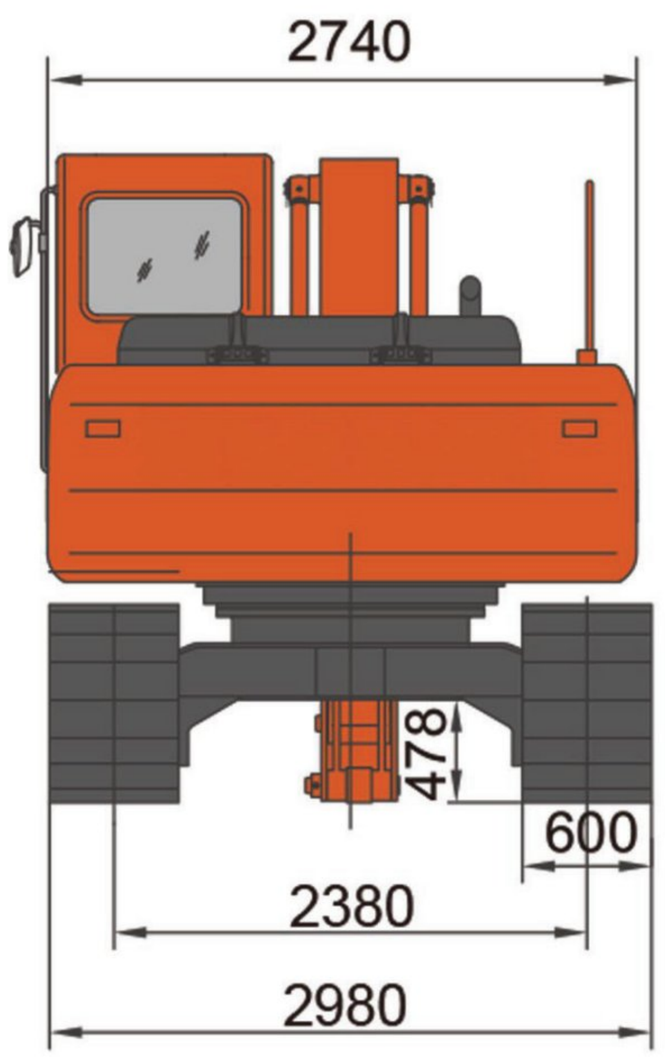


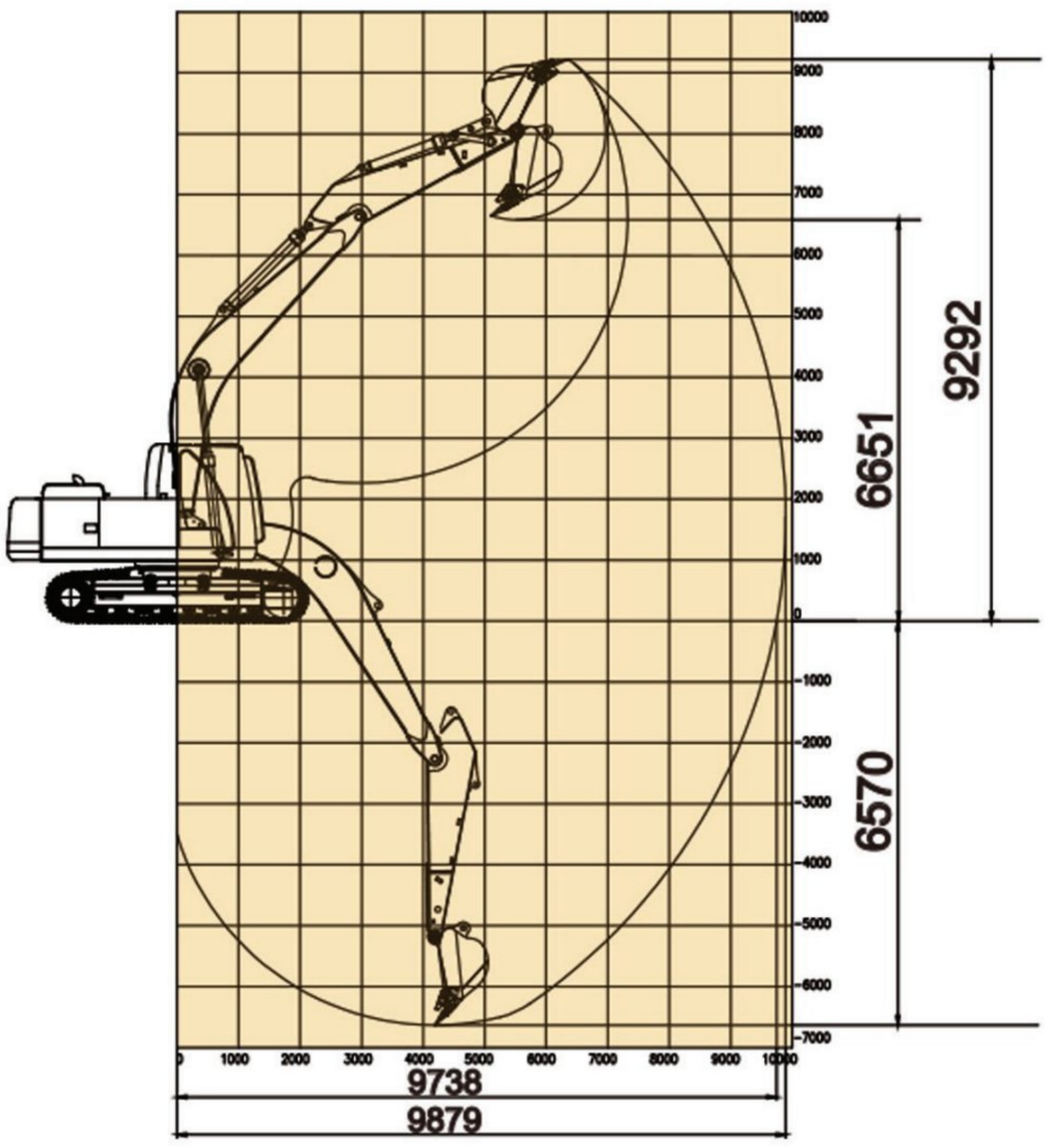




Dipindai dengan CamScanner

# TECHINCAL PARAMETERES BD9240

| Name | | Data |
|---|---|---|
| Basic | Operating weight | 22600 kg |
| | Boom length | 5700 mm |
| | Arm length | 2900 mm |
| | Standard bucket | 1.16 $m^3$ |
| | Max.Travel speed | 3.0/5.1 km/h |
| | Max.Swing speed | 12.1 rpm |
| | Grade ability | 35°(70%) |
| | Ground pressure | 47 kPa |
| | Max.Traction force | 217 kN |



Dipindai dengan CamScanner

| | | |
|---|---|---|
| Engine | Engine model | 6BTAA5.9-C178-II |
| | Rated power | 133 kW/2000 rpm |
| | Max.Torque | 708/1500 N.m/rpm |
| | Displacement | 5.9 L |
| | Fuel tank | 350 L |
| Hydraulic | Max.Flow(total) | 224×2 L/min |
| | Max.Working pressure | 34.3 MPa |
| | Max.Pilot pressure | 3.9 Mpa |
| | Max.Arm digging force | 94/102 kN(ISO) |
| | Max.Bucket digging force | 129/141 kN(ISO) |
| | Hydraulic oil tank | 220 L |
| Chassis | Track width | 600 mm |
| | Track shoes number | 49( each side) |
| | Carrier rollers number | 2( each side) |
| | Track rollers number | 9( each side) |
| Electric | System vollage | 24 V |
| | Battery capacity | 24 V,120 Ah×2 |

# PRODUCT FEATURES

| |
|---|
| Cummins turbocharged direct injection engine,Strong Power, Fuel-efficient. |
| Three-stage Air & Fuel Filtering System |
| Charge air Cooling System with Parallel Radiator |
| Advanced Control System with Function of Interflow & Re-activation, Swing Priority |
| 8 inch LCD Display with Multi Purpose |
| Comfortable ROPS Cabin with 2.7m³ Operational Space |
| No Frame Cab Glasses to Enlarge Operation Field of View |
| Heavty-duty Working Device with High Strength Low Alloyed Steels |



Dipindai dengan CamScanner

# OPTIONAL EQUIPMENT

| |
|---|
| 1.1m³ rock bucket |
| 1.2m³ loading bucket |
| 1.35m³ loading bucket |
| Breaking hammer & pipeline |
| Bidirectional auxiliary pipeline |
| Work warning light |
| Walking alarm |
| MP3 |
| Top protecting net |
| Front protecting net |
| 700mm triple grouser shoes |
| 800mm triple grouser shoes |
| Track rubber block |

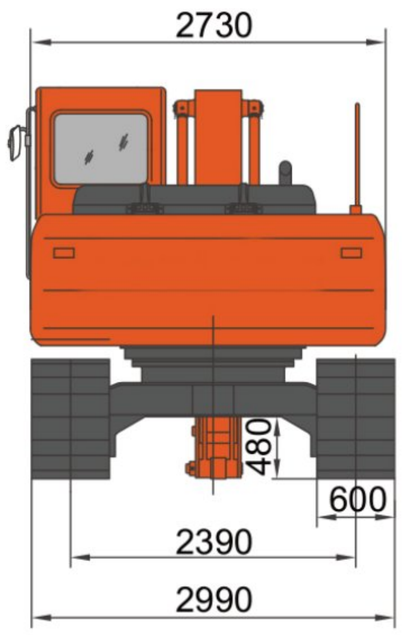


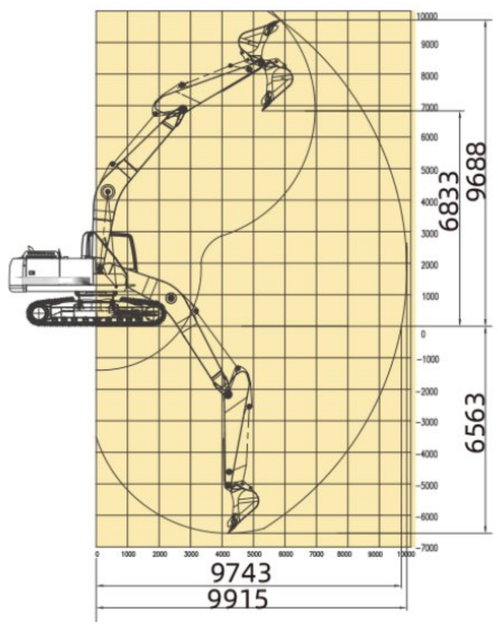


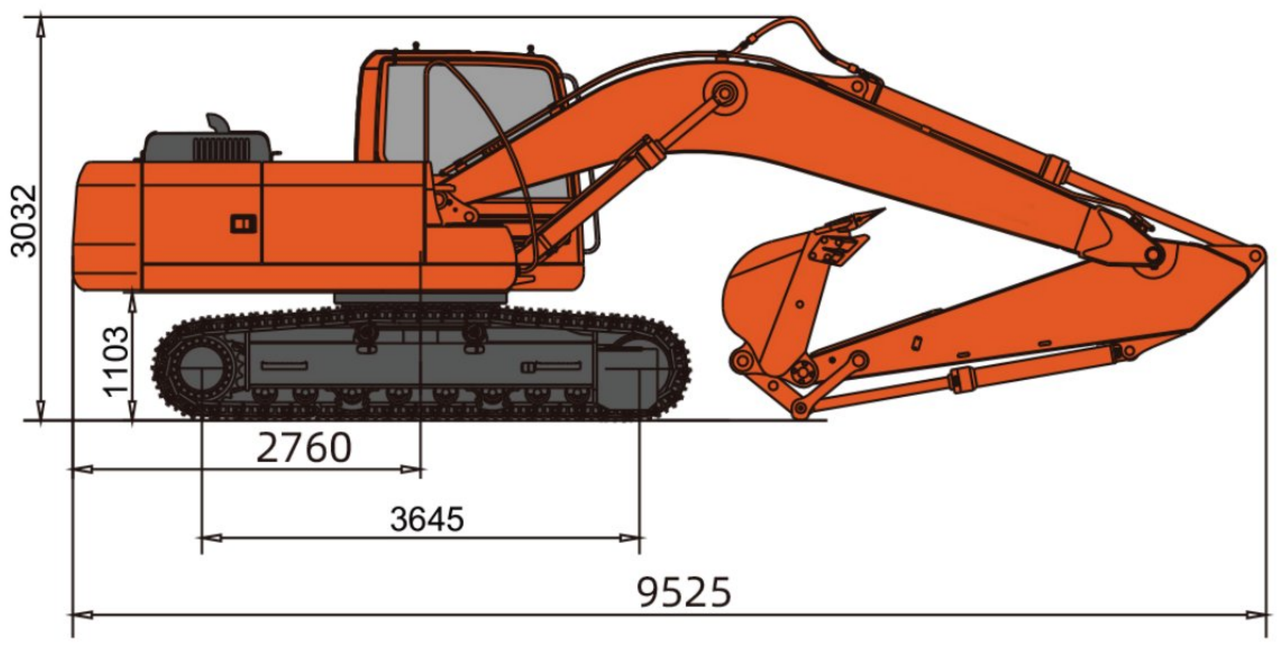




Dipindai dengan CamScanner

# TECHINCAL PARAMETERES BD9306

| | | | |
|---|---|---|---|
| Basic | Operating weight | kg | 32800 |
| | Boom length | mm | 6150 |
| | Arm length | mm | 3200 |
| | Standard bucket | $m^3$ | 1.6 |
| | Max.Travel speed | km/h | 3.4-5.2 |
| | Max.Swing speed | rpm | 10 |
| | Grade ability | ° | 35(70%) |
| | Ground pressure | kPa | 62 |
| | Max.Traction force | kN | 283 |



Dipindai dengan CamScanner

| | | | |
|---|---|---|---|
| **Engine** | Engine model | —— | 6GLTAA8.9-C325 |
| | Rated power | kW/rpm | 241/2000 |
| | Max.Torque | Nm/rpm | 1450 /1500 |
| | Displacement | L | 8,9 |
| | Fuel tank | L | 600 |
| **Hydraulic** | Max.Flow(total) | L/min | 288×2 |
| | Max.Working pressure | MPa | 34.3 |
| | Max.Pilot pressure | MPa | 3.9 |
| | Max.Arm digging force | kN | 170 |
| | Max.Bucket digging force | kN | 220 |
| | Hrdraulic oil tank | L | 300 |
| **Chassis** | Track width | mm | 600 |
| | Track shoes number | —— | 47×2 |
| | Carrier rollers number | —— | 2×2 |
| | Track rollers number | —— | 8×2 |
| **Electric** | System vollage | V | 24 |
| | Battery capacity | V/Ah | 24/165×2 |

# PRODUCT FEATURES

| |
|---|
| Cummins strong power engine. Emission standard meets EU stage II |
| Optimized Cooling System to Reduce Power Loss and Noise |
| Advanced Control System |
| Combined C type closed frame improves rigidity and strength of rotary platform. |
| Camfortable ROPS Cabin with 2.7m³ Operational Space |
| No Frame Cab Glasses to Enlarge Operation Field of View |
| Rock Track Shoes, Chassis Reinforcement, More reliable and Wear-resistant |
| Heavty-duty Working Device with High Strength Low Alloyed Steels |



Dipindai dengan CamScanner

# OPTIONAL EQUIPMENT

| |
|---|
| Breaking hammer & pipeline |
| Work warning light |
| Walking alarm |
| Top protecting net |
| Front protecting net |
| 700mm triple grouser shoes |
| 800mm triple grouser shoes |

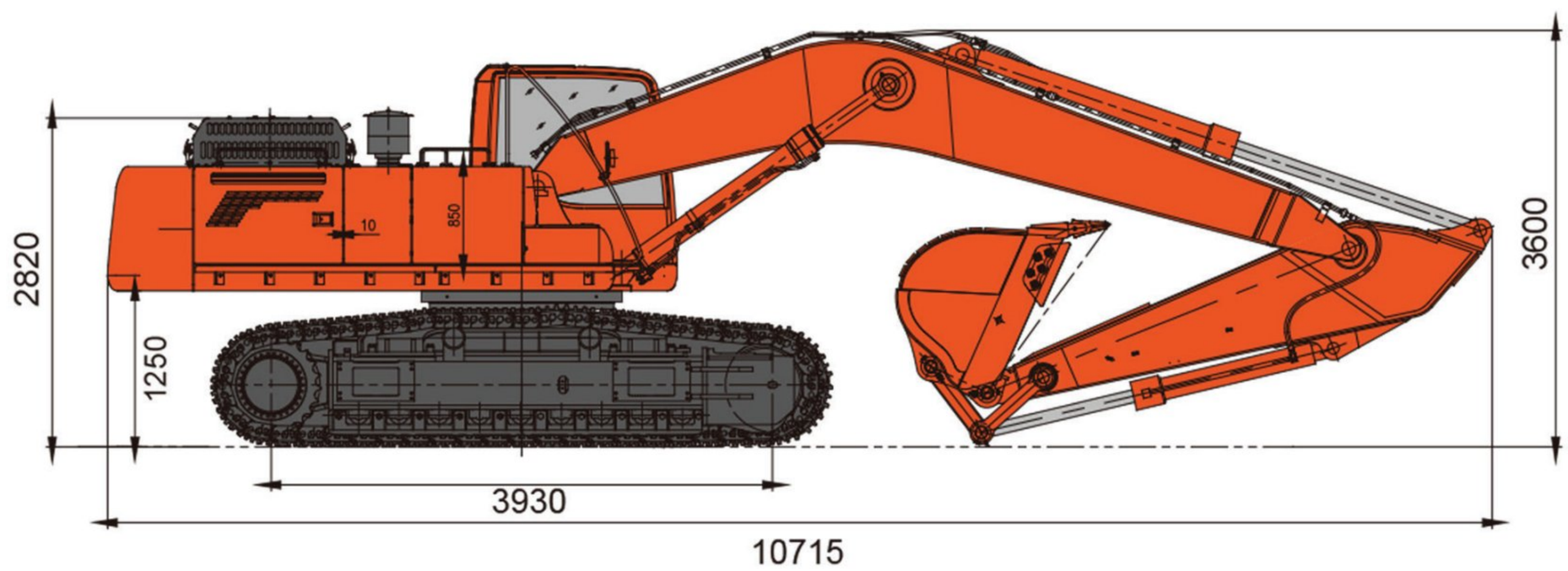


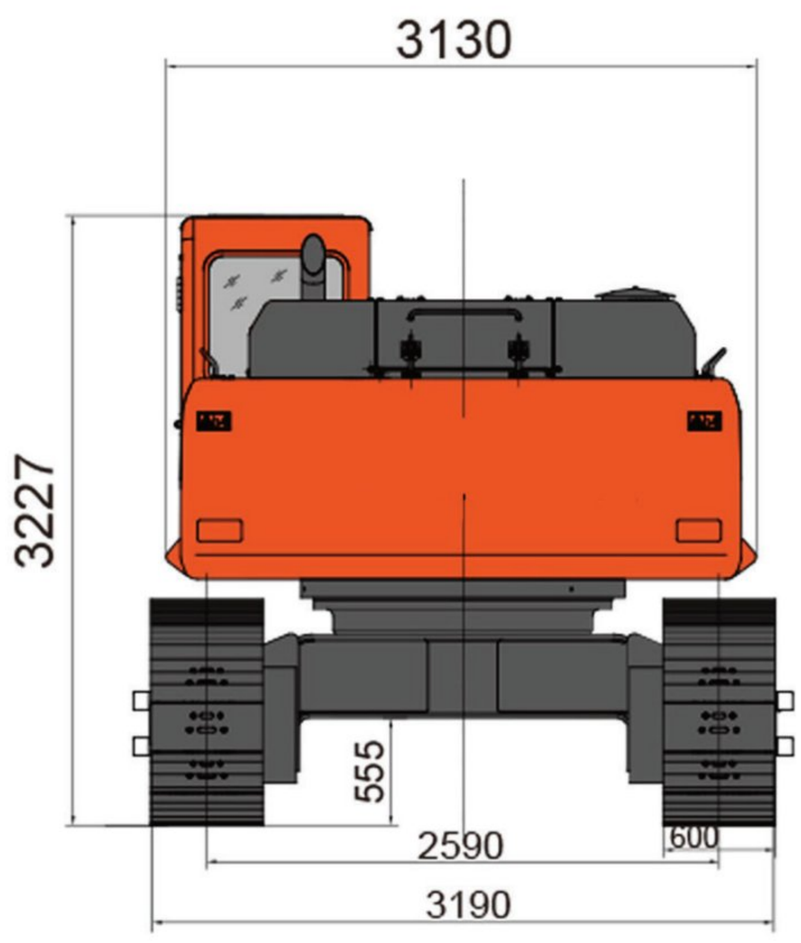


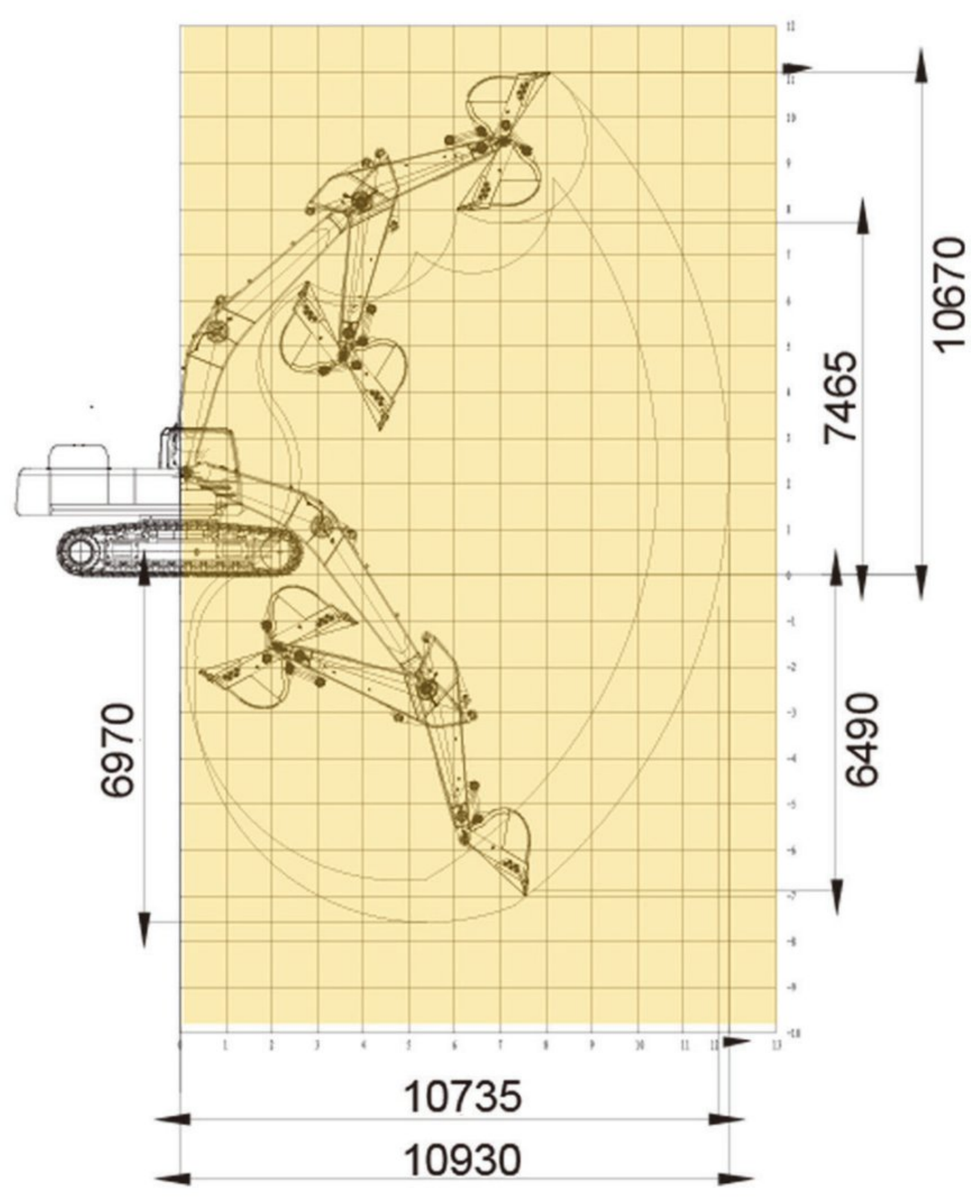




Dipindai dengan CamScanner

# EXCAVATOR BDMG BD9336

## TECHINICAL PARAMETER

| | | |
|---|---|---|
| BASIC | Operating weight | 32800 kg |
| | Boom length | 6150 mm |
| | Arm length | 3200 mm |
| | Standard bucket | 1.6 (Rock) m³ |
| | Max.Travel speed | 3.4-5.2 km/h |
| | Max.Swing speed | 9.5 rpm |
| | Grade ability | 35(70%) ° |
| | Ground pressure | 62 kPa |
| | Max.Traction force | 283 kN |
| ENGINE | Engine model | 6L8.9-C325 |
| | Rated power | 241/2000 kW/rpm |
| | Max.Torque | 1450/1300 Nm/rpm |
| | Displacement | 8.9 L |
| | Fuel tank | 600 L |

| | | |
|---|---|---|
| HYDRAULIC | Max.Flow(total) | 288×2 L/min |
| | Max.Working pressure | 34.3 MPa |
| | Max.Pilot pressure | 3.9 MPa |
| | Max.Arm digging force | 170 kN |
| | Max.Bucket digging force | 220 kN |
| | Hrdraulic oil tank | 300 L |
| CHASSIS | Track width | 600 mm |
| | Track shoes number | 47×2 |
| | Carrier rollers number | 2×2 |
| | Track rollers number | 8×2 |
| ELECTRIC | System vollage | 24 V |
| | Battery capacity | 24/165×2 V/Ah |



Dipindai dengan CamScanner

# PRODUCT FEATURES

**Cummins Turbocharged Engine, Large Displacement, Strong Power**

**Optimized Cooling System to Reduce Power Loss and Noise**

**Advanced Control System**

**Combined C type closed frame improves rigidity and strength of rotary platform**

**Camfortable ROPS Cabin with 2.7m³ Operational Space**

**No Frame Cab Glasses to Enlarge Operation Field of View**

**Rock Track Shoes, Chassis Reinforcement, More reliable and Wear-resistan**

**Heavty-duty Working Device with High Strength Low Alloyed Steels**

# OPTIONAL

**Breaking hammer & pipeline**

**Work warning light**

**Walking alarm**

**Top protecting net**

**Front protecting net**

**700mm triple grouser shoes**

**800mm triple grouser shoes**



Dipindai dengan CamScanner

# SIZE CHART

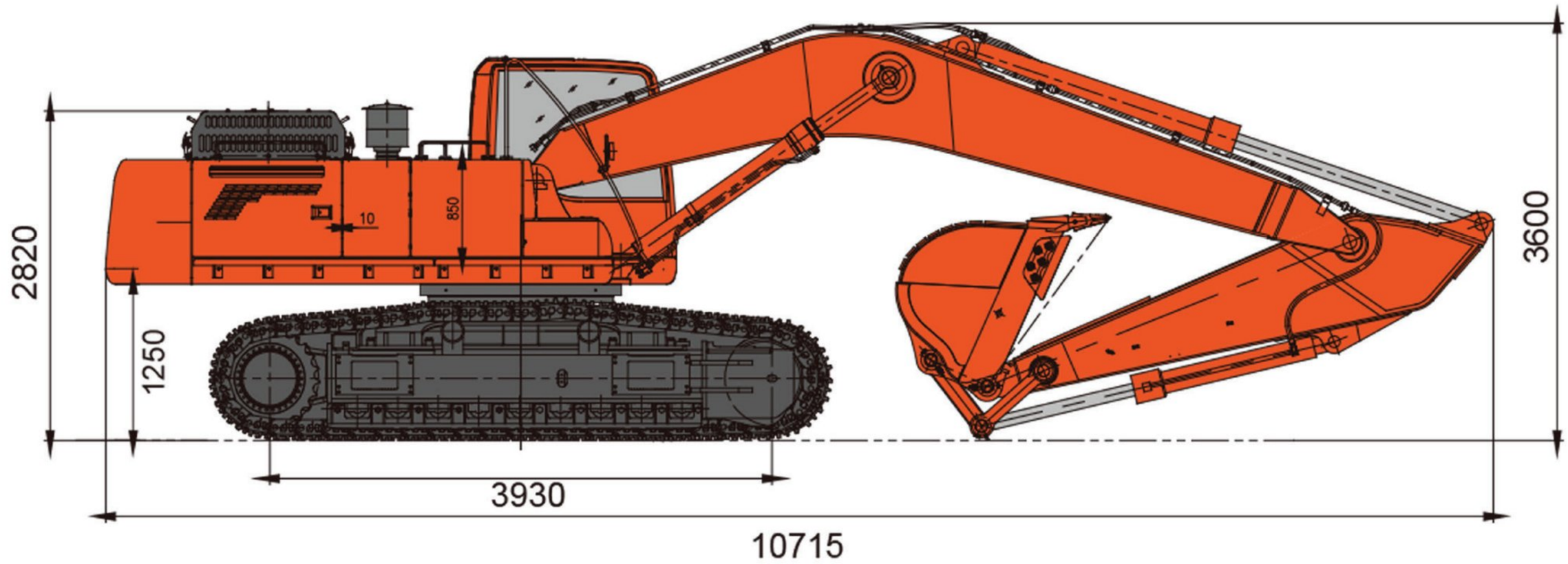


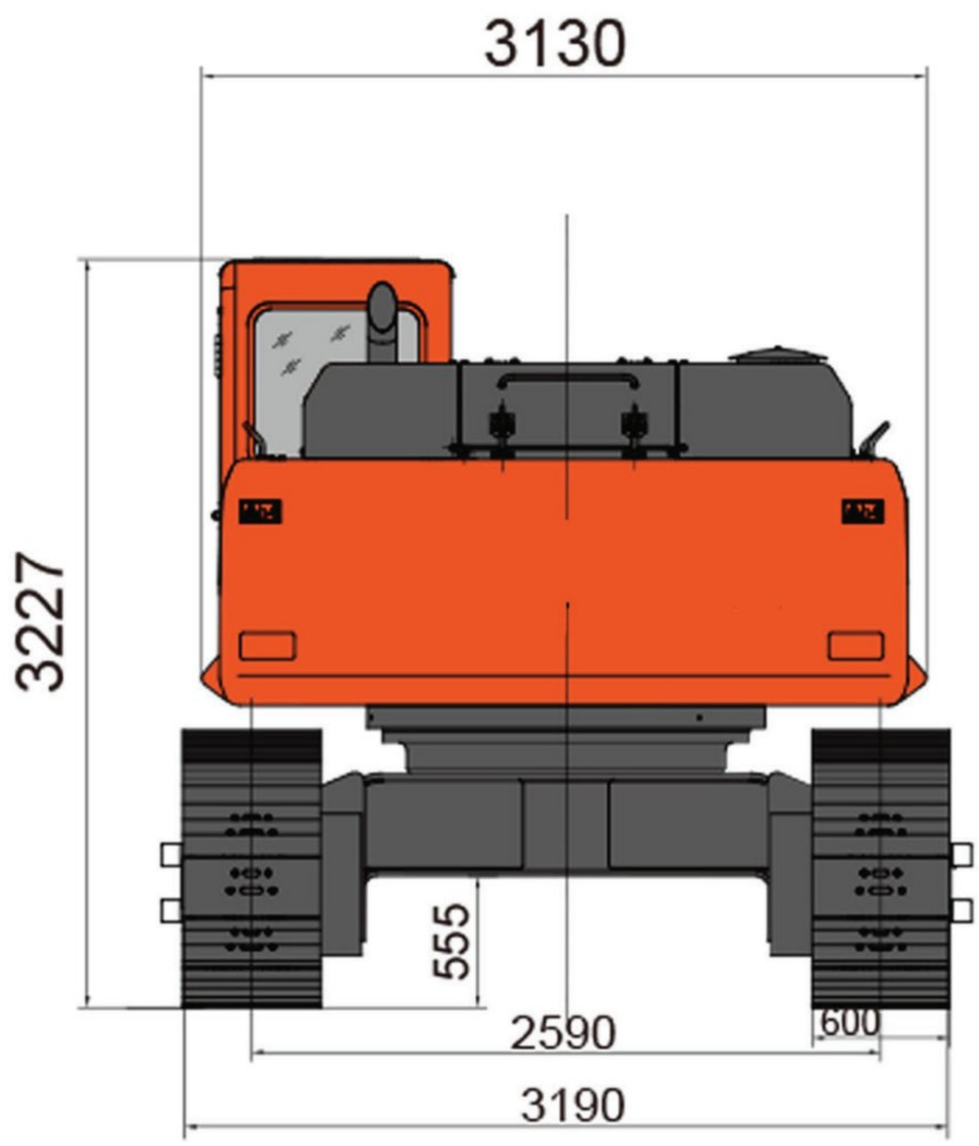


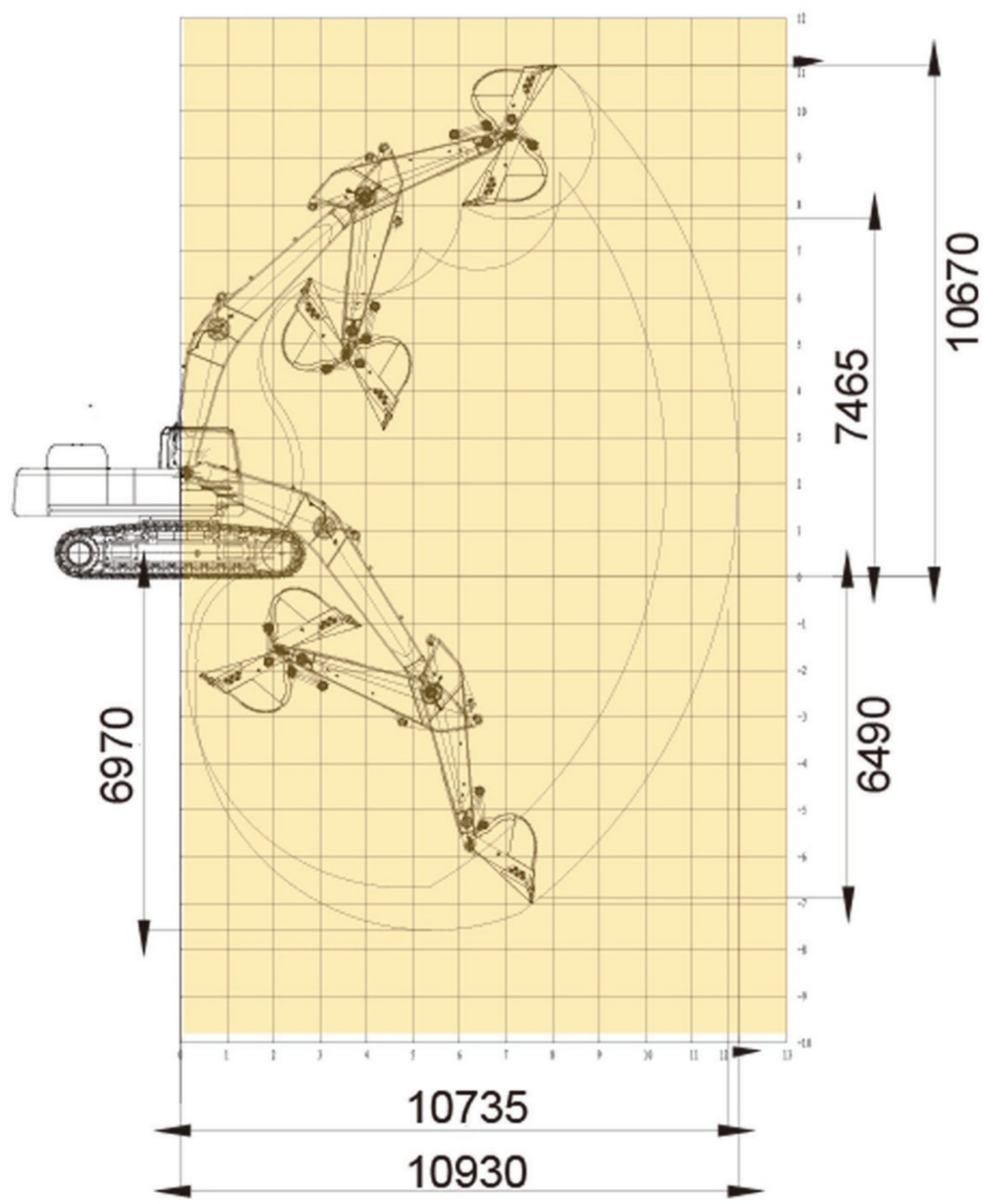




Dipindai dengan CamScanner

# TECHINCAL PARAMETERES BD9376

| | | | |
|---|---|---|---|
| Basic | Operating weight | kg | 39300 |
| | Boom length | mm | 6500 |
| | Arm length | mm | 2800 |
| | Standard bucket | $m^3$ | $1.9m^3$ |
| | Max.Travel speed | km/h | 3.1/5.3 |
| | Max.Swing speed | rpm | 9.2 |
| | Grade ability | ° | 35(70%) |
| | Ground pressure | kPa | 71 |
| | Max.Traction force | kN | 334 |



Dipindai dengan CamScanner

| | | | |
|---|---|---|---|
| **Engine** | Engine model | —— | 6LTAA8.9-C325 |
| | Rated power | kW/rpm | 241/2000 |
| | Max.Torque | Nm/rpm | 1080/1500 |
| | Displacement | L | 8.9 |
| | Fuel tank | L | 600 |
| **Hydraulic** | Max.Flow(Main pump) | L/min | 324×2 |
| | Working pressure | MPa | 34.3 |
| | Max Pilot Flow | L/min | 27 |
| | Max.Arm digging force | kN | 210 |
| | Max.Bucket digging force | kN | 235 |
| | Hrdraulic oil tank | L | 300 |
| **Chassis** | Track width | mm | 600 |
| | Track shoes number | —— | 49×2 |
| | Carrier rollers number | —— | 2×2 |
| | Track rollers number | —— | 9×2 |
| **Electric** | System vollage | V | 24 |
| | Battery capacity | V/Ah | 24/165×2 |

# PRODUCT FEATURES

| |
|---|
| Cummins Turbocharged Engine, Large Displacement, Strong Power |
| Optimized Cooling System to Reduce Power Loss and Noise |
| Advanced Hydraulic Control System |
| Combined C type closed frame improves rigidity and strength of rot platform. |
| Camfortable ROPS Cabin with 2.7m³ Operational Space |
| No Frame Cab Glasses to Enlarge Operation Field of View |
| Rock Track Shoes, Chassis Reinforcement, More reliable and Wear-resistant |
| Heavty-duty Working Device with High Strength Low Alloyed Steels |



Dipindai dengan CamScanner

# OPTIONAL EQUIPMENT

| |
|---|
| Breaking hammer & pipeline |
| Work warning light |
| Walking alarm |
| Top protecting net |
| Front protecting net |
| 700mm triple grouser shoes |
| 800mm triple grouser shoes |

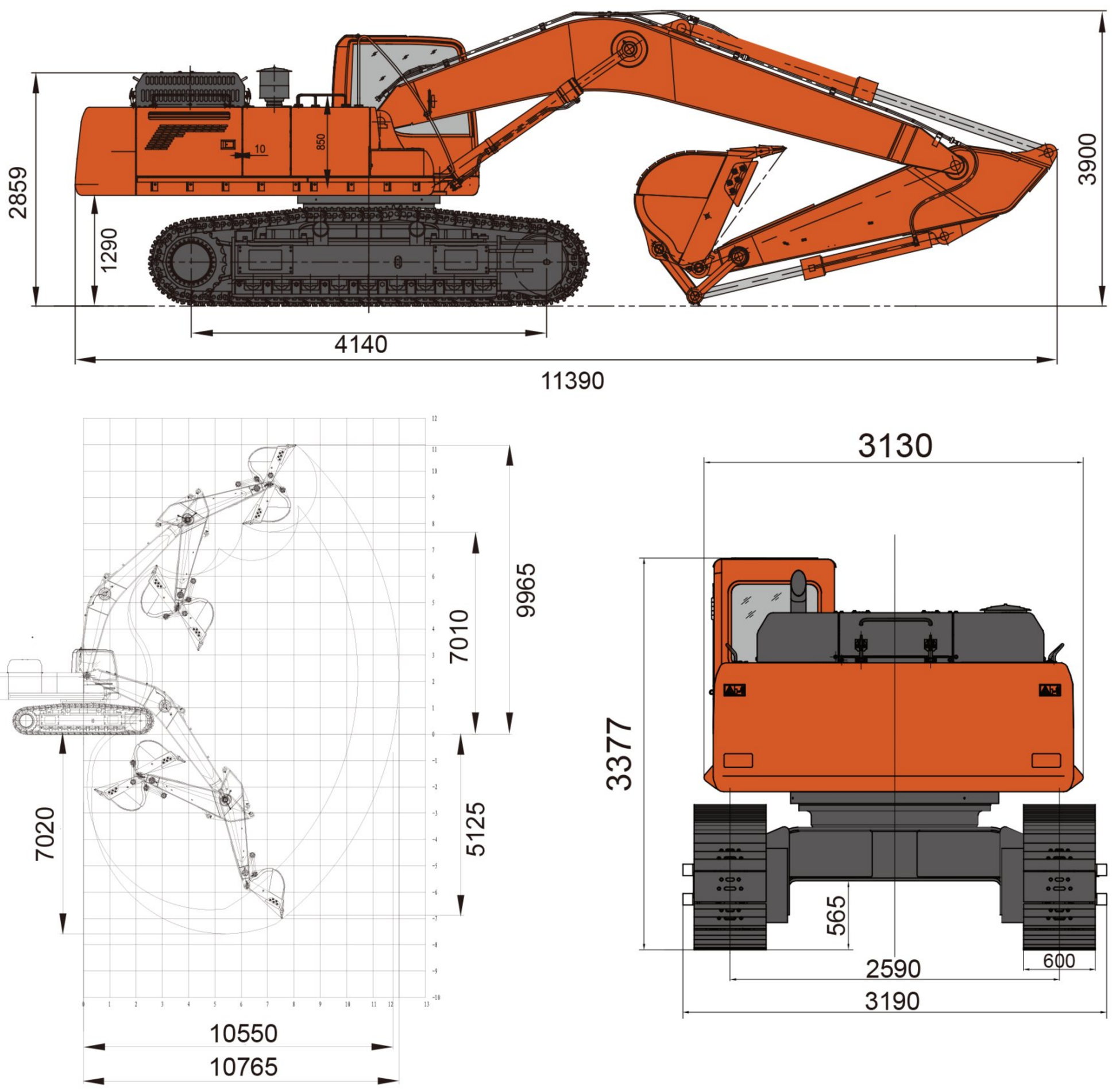




Dipindai dengan CamScanner

# EXCAVATOR BDMG BD9490 -TECHNICAL SPESIFICATIONS

| | Name | Data |
|---|---|---|
| Basic | Operating weight | 50500 kg |
| | Boom length | 7000 mm |
| | Arm length | 3000 mm |
| | Standard bucket | 2.6 m³（Rock） |
| | Max.Travel speed | 3.4/5.3 km/h |
| | Max.Swing speed | 8 rpm |
| | Grade ability | 35°(70%) |
| | Ground pressure | 87.1 kPa |
| | Max.Traction force | 396 kN |
| Engine | Engine model | 6WG1-XDHAG-03-C3 |
| | Rated power | 300 kW/1800 rpm |
| | Max.Torque | 1932/1400 N.m/rpm |
| | Displacement | 15.681 L |
| | Fuel tank | 680 L |



Dipindai dengan CamScanner

| | | |
|---|---|---|
| Hydraulic | Max.Flow(total) | 360×2 L/min |
| | Max.Working pressure | 34.3 MPa |
| | Max.Pilot pressure | 3.9 Mpa |
| | Max.Arm digging force | 245 kN(ISO) |
| | Max.Bucket digging force | 287 kN(ISO) |
| | Hydraulic oil tank | 480 L |
| Chassis | Track width | 600 mm |
| | Track shoes number | 50( each side) |
| | Carrier rollers number | 2( each side) |
| | Track rollers number | 9( each side) |
| Electric | System vollage | 24 V |
| | Battery capacity | 24 V,200 Ah×2 |

## PRODUCT FEATURES

| |
|---|
| Isuzu Turbocharged Engine, Large Displacement, Strong P |
| Adopt Independent Cooling System to Reduce Power Loss |
| Advanced Hydraulic System |
| Combined C type closed frame improves rigidity and stren platform. |
| Comfortable ROPS Cabin with 2.7m³ Operational Space |
| No Frame Cab Glasses to Enlarge Operation Field of View |
| Double-rib Rock Track Shoes, Chassis Reinforcement, Mo Wear-resistant |
| Heavty-duty Working Device with High Strength Low Alloyed |

## OPTIONAL

| |
|---|
| Breaking hammer & pipeline |
| Work warning light |
| Walking alarm |
| Front protecting net |
| 700mm triple grouser shoes |
| 800mm triple grouser shoes |



Dipindai dengan CamScanner

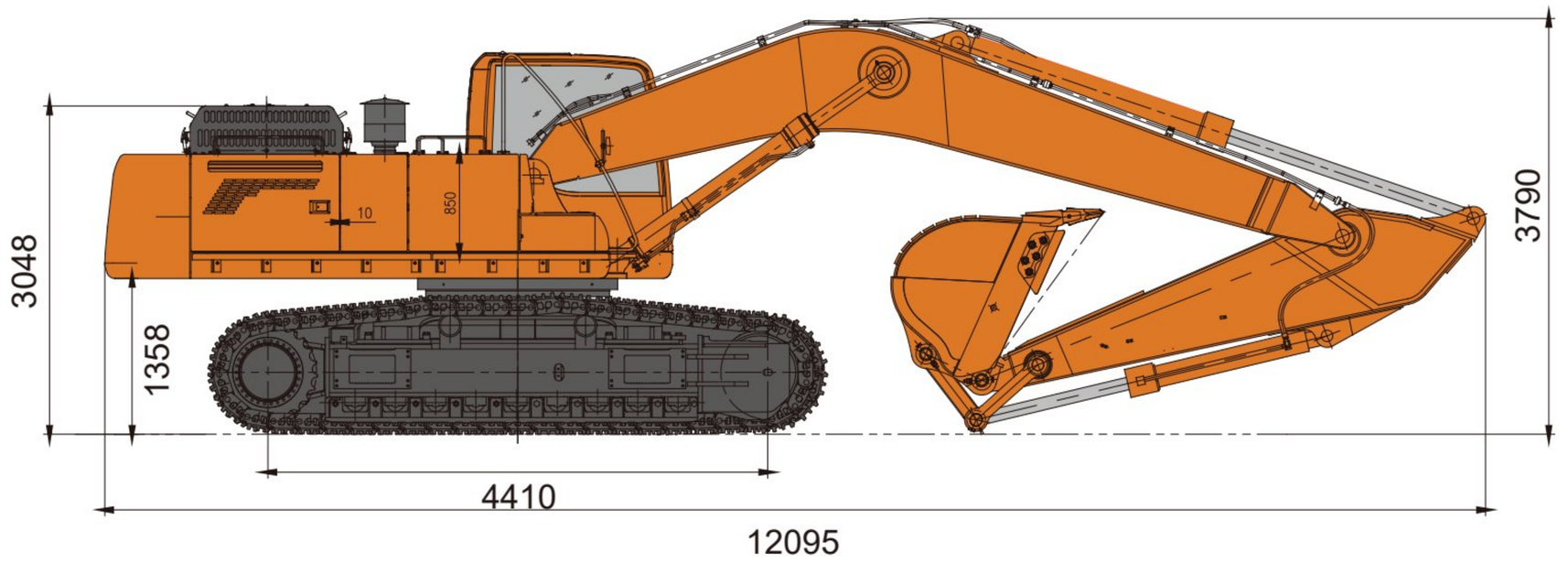


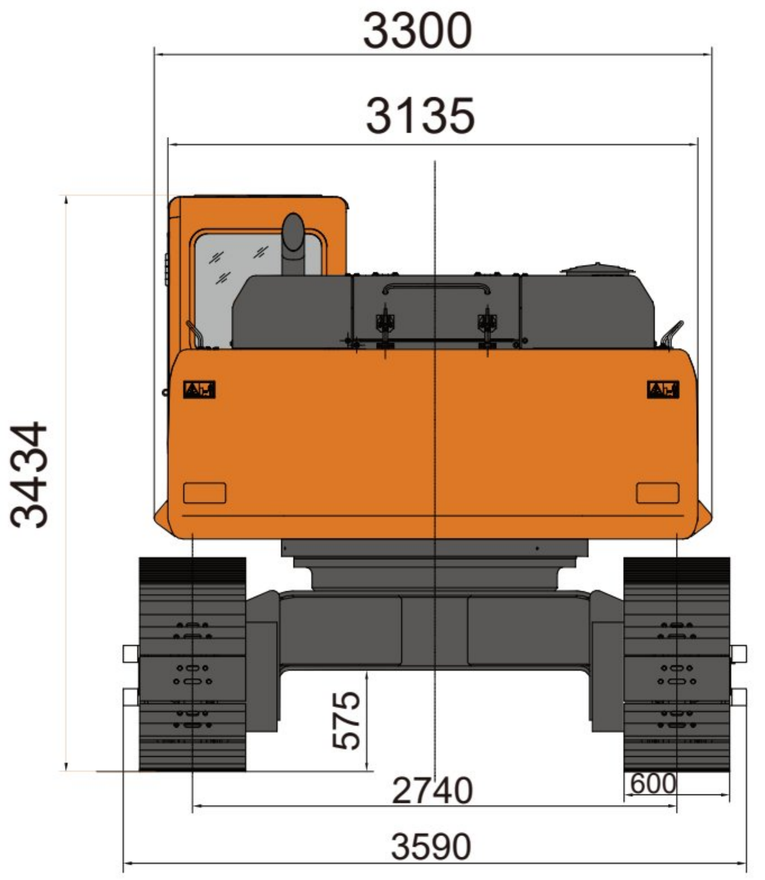


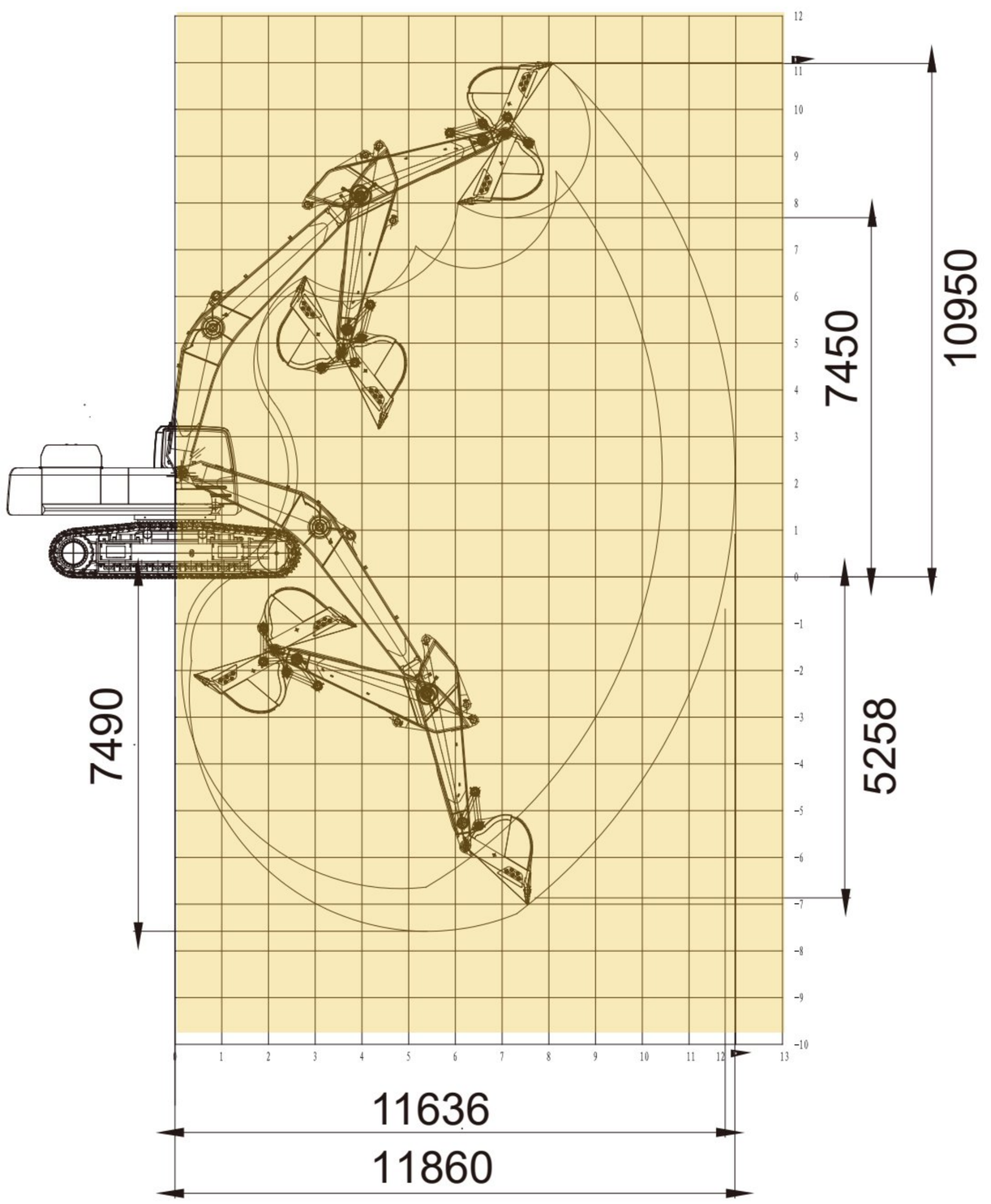




Dipindai dengan CamScanner

# DOZER BD160-TECHINCAL PARAMETER

| 发动机\Engine | |
|---|---|
| 发动机品牌\Brand | 潍柴动力\Weichai power |
| 发动机型号\Model No. | WD10G178E25 |
| 功率\转速\Power\revolution (Kw\rpm) | 131kW/1850rpm |
| 发动机最大扭矩\Max. torque (N.m) | 830 |
| 发动机类型\Type | 水冷、直列、四冲程、直喷式<br>Water colling,Inline,Four stroke,Direct injection |
| 发动机燃油容量\Fuel capacity (L) | 300 |
| 发动机排量\Piston Displacement (L) | 9.726 |
| 发动机燃油消耗率（g/kwh） | ≤210 |



Dipindai dengan CamScanner

| 推土铲\Blade | | |
|---|---|---|
| 标配推土铲形式\Standard Blade type | | 直倾铲\Straight tilt Blade |
| 选配推土铲形式\Optional Blade type | | 角铲\Angle Blade |
| 推土铲长x高\Blade L x H (mm) | | 直倾铲\Straight tilt Blade：3450x1130 |
| | | 角铲\Angle Blade：4000x1040 |
| 推土铲容量\Dozing capacity (m3) | | 4.5/4.3 |
| 推土铲最大提升高度\Max. lift above ground (mm) | | 1100 |
| 推土铲最大切土深度\Max. drop below ground (mm) | | 540 |
| 松土器型式\Scarifier type | | 三齿/Three teeth |
| **履带参数\Track shoes** | | |
| 履带板数(每侧)\Number of Track shoes (each side) | | 37 |
| 履带宽度\Width of track shoes (mm) | | 510（560/610） |
| 链轮节距\ Pitch (mm) | | 203 |
| 履带中心距\Track gauge (mm) | | 1880 |
| 托链轮数量(每侧)\Carrier rollers (each side) | | 2 |
| 支垂轮数量(每侧＞\Track rollers (each side) | | 6 |
| 接地比压\Ground pressure (Kpa) | | 58(55/50) |
| 最小离地间距\Min. ground clearance (mm) | | 385 |
| 爬坡度\Gradeabilily (°) | | 30 |
| **整车参数\Overall Specification** | | |
| 外形尺寸\Dimensions(mm) | 含松土器(With Scarifier) | 6265×3450×3360 |
| 长x宽x高 Lx Wx H | 不含松土器(Without Scarifier) | 5040×3450×3360 |
| 整车质量\Total Weight (T) | | 17 |
| 水箱容量Water tank capacity | | 56 |
| 前进各档位速度(Km/h)Travel speed\Forward | | 3.29；5.82；9.63 |
| 后退各档位速度(Km/h)Travel speed\Reverse | | 4.28；7.59；12.53 |



Dipindai dengan CamScanner

Dipindai dengan CamScanner

# DOZER BD230-TECHINCAL PARAMETER

| 型号\Model | | LG230(标准型\Standard type) |
|---|---|---|
| **发动机\Engine** | | |
| 发动机品牌\Brand | | 潍柴动力\Weichai power |
| 发动机型号\Model No. | | WD12G240E206 |
| 功率\转速\Power\revolution (Kw\rpm) | | 175kW/1800rpm |
| 发动机最大扭矩\Max. torque (N.m) | | 1100 |
| 发动机类型\Type | | 水冷、直列、四冲程、直喷式<br>Water colling,Inline,Four stroke,Direct injection |
| 发动机燃油容量\Fuel capacity (L) | | 500 |
| 发动机排量\Piston Displacement (L) | | 11.596 |
| 发动机燃油消耗率（g/kwh） | | ≤210 |
| **推土铲\Blade** | | |
| 标配推土铲形式\Standard Blade type | | 直倾铲\Straight tilt Blade |
| 选配推土铲形式\Optional Blade type | | 角铲\Angle Blade,U型\With U shape,半U\ With Semi-U |
| 推土铲长x高\Blade L x H (mm) | | 直倾铲\Straight tilt Blade：3725x1240 |
| | | 角铲\Angle Blade：4365x1055 |
| | | U型\With U shape：3800x1343 |
| | | 半U\ With Semi-U：3725x1374 |
| 推土铲容量\Dozing capacity (m3) | | 直6.4，角4.7， U7.5，半U7 |
| 推土铲最大提升高度\Max. lift above ground (mm) | | 1350 |
| 推土铲最大切土深度\Max. drop below ground (mm) | | 540 |
| 松土器型式\Scarifier type | | 单齿Single tooth(三齿Three teeth) |
| **履带参数\Track shoes** | | |
| 履带板数(每侧)\Number of Track shoes (each side) | | 39 |
| 履带宽度\Width of track shoes (mm) | | 560 |
| 链轮节距\ Pitch (mm) | | 216 |
| 履带中心距\Track gauge (mm) | | 2000 |
| 托链轮数量(每侧)\Carrier rollers (each side) | | 2 |
| 支垂轮数量(每侧>\Track rollers (each side) | | 7 |
| 接地比压\Ground pressure (Kpa) | | 75 |
| 最小离地间距\Min. ground clearance (mm) | | 395 |
| 爬坡度\Gradeabilily (° ) | | 30 |
| **整车参数\Overall Specification** | | |
| 外形尺寸\Dimensions(mm) | 含松土器(With Scarifier) | 7090×3725×3590 |
| 长x宽x高 Lx Wx H | 不含松土器(Without Scarifier) | 5500×3725×3590 |
| 整车质量\Total Weight (T) | | 23.5 |
| 水箱容量Water tank capacity | | 79 |
| 前进各档位速度(Km/h)Travel speed\Forward | | 3.6; 6.5; 11.2 |
| 后退各档位速度(Km/h)Travel speed\Reverse | | 4.3; 7.7; 13.2 |

Dipindai dengan CamScanner

# BDMG DIESEL DUMP TRUCK 8X4 -TECHNICAL SPESIFICATIONS

| | |
|---|---|
| ENGINE MODEL | WP12.400E201, EURO II EMISSION STANDARD |
| INJECTION | 4 STROKE DIRECT INJECTION DIESEL ENGINE |
| CYLINDER | 6 CYLINDER IN-LINE WITH WATER COOLING, TURBO-CHARGING &INTERCOOLING |
| MAXIMUM OUTPUT | 400HP (294KW) AT 1900 RPM |
| MAXIMUM TORQUE | 1800NM AT 1000-1400 RPM |
| DRIVING TYPE | 8X4 |
| ENGINE OIL | 28L |
| HORSE POWER | 400 HP |
| CLUTCH | SINGLE-PLATE DRY DIAPHRAGM SPRING CLUTCH |



Dipindai dengan CamScanner

| | |
|---|---|
| BRAKE | DUEL CIRCUIT COMPRESSED AIR BRAKE |
| EMERGENCY BRAKE | SPRING ENERGY, COMPRESSED AIR OPERATING ON REAR WHEELS |
| AUXILIARY BRAKE | ENGINE EXHAUST BRAKE |
| TYPES | 12.00 R24 RADIAL TYRE, (MINING PATTERN) |
| STARTER | 24V, 5.4KW |
| ALTERNATOR | AC 28V , 80A |
| BATTERIES | 2X 180AH |
| WHEEL BASE | 2100 + 4467 + 1415 MM |
| OVERALL DIMENSION | 11980 X 2720×3970 (MM) |
| DUMP BODY SIZE | 8800 X 2550 X 2300 (MM |
| DEAD WEIGHT | 21700 KG |
| GROSS VEHICLE WEIGHT | 66300 KG |
| MAXIMUM DRIVING SPEED (KM/H) | 78 KM/H |
| MAXIMUM GRADEABILITY (%) | 35% |
| MINIMUM GROUND CLEARANCE (MM) | 314 MM |
| LOAD CAPACITY | 51.6 M3 |



Dipindai dengan CamScanner

# BDMG DIESEL DUMP TRUCK 6X4 -TECHNICAL SPESIFICATIONS

| | |
|---|---|
| ENGINE MODEL | WD615.47, EURO II EMISSION STANDARD |
| INJECTION | 4 STROKE DIRECT INJECTION DIESEL ENGINE |
| CYLINDER | 6 CYLINDER IN-LINE WITH WATER COOLING, TURBO-CHARGING & INTERCOOLING |
| DRIVING TYPE | 6 × 4 |
| MAXIMUM OUTPUT | 371HP (273KW) AT 2200 RPM |
| MAXIMUM TORQUE | 1500NM AT 1100-1600 RPM |
| HORSE POWER | 371 HP |
| ENGINE OIL | 23L |



Dipindai dengan CamScanner

| | |
|---|---|
| CLUTCH | SINGLE-PLATE DRY DIAPHRAGM SPRING CLUTCH |
| TRANSMISSION | TRANSMISSION: 9 FORWARD AND 1 REVERSE<br>TRANSMISSION OIL CAPACITY：14L |
| ELECTRIC | ALTERNATOR: 28V, 1540W<br>STARTER: 24V, 5.4KW<br>BATTERIES: 2×12, 165AH |
| WHEEL BASE | 3825 + 1350 MM |
| OVERALL DIMENSION | 8750×2550×3570 (MM) |
| BODY SIZE | 5800*2300*1800MM, |
| DEAD WEIGHT | 14350 KG |
| GROSS VEHICLE WEIGHT | 41500 KG |
| MAXIMUM DRIVING SPEED (KM/H) | 80 |
| MAXIMUM GRADEABILITY (%) | 35 |
| MINIMUM GROUND CLEARANCE (MM) | 314 |
| LOAD CAPACITY | 33 $M^3$ - 35 $M^3$ |
| GVW | 41500 KG |



Dipindai dengan CamScanner

# BD955H

## -TECHINICAL PARAMETER

### BASIC

| | |
|---|---|
| Bucket Capacity | 3.0m³ |
| Rated Payload | 5000kg |
| Operating Weight | 17200±300kg |
| Traction Force | 160±3kN |
| Breakout Force | 185±3kN |
| L×W×H | 8460×3000×3400 |
| Dumping Height | 4471 mm |
| Maximal Height | 5688 mm |



Dipindai dengan CamScanner

# ENGINE

| | |
|---|---|
| Maker/Model | WEICHAI/WP10G220E21 |
| Rated Power | 162kW/2200rpm |
| Maximum Torque | 860N·m/1400-1600rpm |
| Bore x Stroke (mm) | 126×130mm |
| No. of Cylinders /Displacement | 6/9.726L |
| Air Cleaner | Three Stage Air Cleaner |
| Alternator | 70Amp |
| Battery | 2-24V/120Ah |
| Starting Motor | 24V/7.5kW |

# DRIVE TRAIN

| | |
|---|---|
| Transmission Type | Planetary Powershift |
| Shift Type Mechanical | Powershift Control |
| Pressure of Transmission | 1.1-1.5MPa |
| Torque Converter Type | Single-stage,Duo-turbine,4-element |
| Axles | Rigid (Front)&Oscillating (Rear) |
| Rear Axle Oscillation (°) | ±10 |
| Differential | Conventional |
| Main Reducer | Spiral Bevel,1-stage Reduction |
| Final Reducer | Planetary Reduction |
| Tire | 23.5-25 L-3 16PR TT |
| Travel Speed-Forward | 13/39 km/h |
| Travel Speed-Reverse | 16 km/h |

# BRAKE SYSTEM

| | |
|---|---|
| Service Brake | Gas Push Oil Caliper Brake |
| Setting Pressure | 0.70-0.78MPa |
| Parking Brake | Air Actuated Caliper Brake |
| Emergency Brake | Air Actuated Caliper Brake |



Dipindai dengan CamScanner

# STEERING SYSTEM

| | |
|---|---|
| Type | Hydraulic Load Sensing System |
| Pump | 176L/min·2200rpm |
| System Pressure | 15MPa |
| Cylinder Type | Double Acting |
| Steering Angle | ±35° |

# HYDRAULIC SYSTEM

| | |
|---|---|
| Type | Joystick Control (Single-lever) |
| Pump | 220L/min·2200rpm |
| Control Valve | 2 Spool |
| System Pressure | 16MPa |
| Cycle Time (Sec) | 9.3 |

# SERVICE REFILL CAPACITY

| | |
|---|---|
| Fuel Tank (L) | 285L |
| Hydraulic Tank (L) | 180L |
| Crankshaft (L) | 17L |
| Transmission (L) | 45L |
| Front Axle/Rear Axle (L) | 28L/28L |



Dipindai dengan CamScanner

# BD963H

## -TECHINICAL PARAMETER

### BASIC

| | |
|---|---|
| Bucket Capacity | 4.2m³ |
| Rated Payload | 6500kg |
| Operating Weight | 22100±300kg |
| Traction Force | 200±5kN |
| Breakout Force | 210±5kN |
| L×W×H | 8805×3200×3540mm |



Dipindai dengan CamScanner

## ENGINE

| | |
|---|---|
| Maker/Model | WEICHAI/WP10G240E341 |
| Rated Power | 178kW/2000rpm |
| Maximum Torque | 1200N·m/1400-1600rpm |
| Bore x Stroke (mm) | 126×130mm |
| No. of Cylinders/Displacement | 6/9.726L |
| Air Cleaner | Three Stage Air Cleaner |
| Alternator | 55Amp |
| Battery | 2-24V/120Ah |
| Starting Motor | 24V/7.5k |

## DRIVE TRAIN

| | |
|---|---|
| Transmission Type | Planetary Powershift |
| Shift Type | Mechanical Powershift Control |
| Pressure of Transmission | 1.2-1.5MPa |
| Torque Converter Type | Single-stage,Duo-turbine,4-element |
| Axles | Rigid (Front)&Oscillating (Rear) |
| Rear Axle Oscillation (°) | ±10 |
| Differential | Conventional |
| Main Reducer | Spiral Bevel,1-stage Reduction |
| Final Reducer | Planetary Reduction |
| Tire | 26.5-25 L-3 24PR TT |
| Travel Speed-Forward | 13/36 km/h |
| Travel Speed-Reverse | 17.5 km/h |

## BRAKE SYSTEM

| | |
|---|---|
| Service Brake | Single Circuit Caliper,Dry Brake |
| Setting Pressure | 0.70-0.78MPa |
| Parking Brake | Air Actuated Caliper Brake |
| Emergency Brake | Air Actuated Caliper Brake |



Dipindai dengan CamScanner

# STEERING SYSTEM

| | |
|---|---|
| Type | Hydraulic Load Sensing System |
| Pump | 165L/min·2200rpm |
| System Pressure | 16MPa |
| Cylinder Type | Double Acting |
| Steering Angle | ±35 |

# HYDRAULIC SYSTEM

| | |
|---|---|
| Type | Double Pump Confluence |
| Pump | 258.5L/min·2200rpm |
| Control Valve | 2 Spool |
| System Pressure | 19MPa |
| Cycle Time (Sec) | <10.8 |

# SERVICE REFILL CAPACITY

| | |
|---|---|
| Fuel Tank (L) | 330L |
| Hydraulic Tank (L) | 270L |
| Crankshaft (L) | 19L |
| Transmission (L) | 63L |
| Front Axle/Rear Axle (L) | 31L/31L |



Dipindai dengan CamScanner

# BD976H

## -TECHINICAL PARAMETER

### BASIC

| | |
|---|---|
| Bucket Capacity | 5.2m³ |
| Rated Payload | 7000kg |
| Operating Weight | 23500(24300)±300kg |
| Traction Force | 200±3kN |
| Breakout Force | 245±3kN |
| L×W×H | 9200(9430)×3400(3480)×3460mm |



Dipindai dengan CamScanner

# ENGINE

| | |
|---|---|
| Maker/Model | WEICHAI/WP10G270E341 |
| Rated Power | 199kW/2200rpm |
| Maximum Torque | 1100N·m/1400-1600rpm |
| Bore x Stroke (mm) | 126×130mm |
| No. of Cylinders/Displacement | 6/9.726L |
| Air Cleaner | Three Stage Air Cleaner |
| Alternator | 55Amp |
| Battery | 2-24V/120Ah |
| Starting Motor | 24V/7.5kW |

# DRIVE TRAIN

| | |
|---|---|
| Transmission | Type Planetary Powershift |
| Shift Type | Automatic electric proportional shift |
| Pressure of Transmission | 1.2-1.5MPa |
| Torque Converter Type | Single-stage,Duo-turbine,4-element |
| Axles | Rigid (Front)&Oscillating (Rear) |
| Rear Axle Oscillation (°) | ±10 |
| Differential | Conventional |
| Main Reducer | Spiral Bevel,1-stage Reduction |
| Final Reducer | Planetary Reduction |
| Tire | 750/65R25 L-3TL |
| Travel Speed-Forward | 6/12.2/22.8//36 km/h |
| Travel Speed-Reverse | 7.5/12.7/22.8 km/h |

# BRAKE SYSTEM

| | |
|---|---|
| Service Brake | Single-Line Air Push oil,Dry Brake |
| Setting Pressure | 0.70-0.78MPa |
| Parking Brake | Pneumatic Drum Brake |
| Emergency Brake | Pneumatic Drum Brake |



Dipindai dengan CamScanner

# STEERING SYSTEM

| | |
|---|---|
| Type | Flow Amplification Steering |
| Pump | 198L/min·2200rpm |
| System Pressure | 18MPa |
| Cylinder Type | Double Acting |
| Steering Angle | ±36° |

# HYDRAULIC SYSTEM

| | |
|---|---|
| Type | Constant Variable Double Pump Confluence |
| Pump | 232L/min·2200rpm |
| Control Valve | 2 Spool |
| System Pressure | 23MPa |
| Cycle Time (Sec) | 10.8 |

# SERVICE REFILL CAPACITY

| | |
|---|---|
| Fuel Tank (L) | 350L |
| Hydraulic Tank (L) | 280L |
| Crankshaft (L) | 19L(CH-4) |
| Transmission (L) | 46L(CH-4) |
| Front Axle/Rear Axle (L) | 46/46L |



Dipindai dengan CamScanner

# TECHINCAL PARAMETERES BD9130

| | Name | Data |
|---|---|---|
| BASIC | Operating weight | 12000 kg |
| | Moldboard Dimensions | 3658×580×20 mm |
| ENGINE | Engine model | CUMMINS 6BT5.9 |
| | Type | Turbocharged,Water cooled |
| | Rated power | 97 kW(132 HP)/2200 rpm |
| | Fuel tank | 370 L |
| DRIVE TRAIN & TANDEM DRIVE | Transmission type | Electro-hydraulic powershift |
| | Shift type | Single handle, Lock in the neutral |
| | Front axle ground clearance | 430 mm |
| | Front axle oscillation angle | ±16° |
| | Front wheel lean angle | 17° |
| | Rear axle type | Full-floating with NO-SPIN differential |
| | Tandem oscillation | 13°(F/R) |
| | Final driving | Spiral bevel gear, single stage reduction |
| | Tandem drive | Double row roller-chains |
| | Tire size | 17.5-25-12PR L-3 |
| | Forward speed-6 gears | 6.9 / 10.7 / 17.3 / 26 / 37.8 / 53.4 km/h |
| | Reverse speed-3 gears | 6.9 / 17.3 / 37.8 km/h |



Dipindai dengan CamScanner

| | | |
|---|---|---|
| **Brakes** | Service brake | Full hydraulic drum brake |
| | Parking brake | Flexible shaft control actuated inner-expanding drum brake |
| **Steering System** | Steering type | Front wheel and articulated steering |
| | Max. front wheel steering angle | 49° (L/R) |
| | Max. frame steering angle | 26° (L/R) |
| | Min. turning radius (front tires) | 6600 mm |
| | Steering system pressure | 16 Mpa |
| | Max. steering system flow | 55 L/min |
| **Hydraulic System** | Max.Flow (at rated engine speed) | 99 L/min |
| | Max.Working pressure | 17.5 MPa |
| | Hrdraulic oil capacity | 65 L |
| **Blade Range** | Moldboard side shift-left | 815 mm |
| | Moldboard side shift-right | 840 mm |
| | Max. shoulder reach-left | 1916 mm |
| | Max. shoulder reach-right | 1886 mm |
| | Max. lift above ground | 410 mm |
| | Max. grading depth | 560 mm |
| | Max.blade angle | 90° (L/R) |
| | Blade tip angle | 29-77° |

## OPTIONAL

| |
|---|
| Optional tyre:13.00-24-12PR G-2 |
| Automatic leveling device |
| ROPS frame |
| Front blade (Blade width:2340mm, Max ground height:569mm) |
| Scarifler (with 11 teeth, Digging width:1325mm,Digging depth:210mm) |
| Ripper (No. of shanks:3 or 5,Digging width:20 9mm,Digging depth:350mm |

## FEATURES

| |
|---|
| Cummnis strong & powerful engine. Direct injection, Water Cooled |
| ZF technology transmission with single handle |
| Imported multil-way valve and booster |
| Full-closed cabin with all-around visibility |
| Equiped with driectional headlight, front and rear work lights |

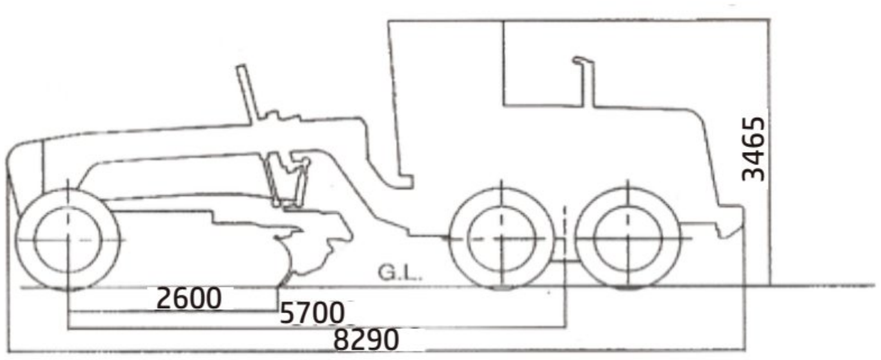


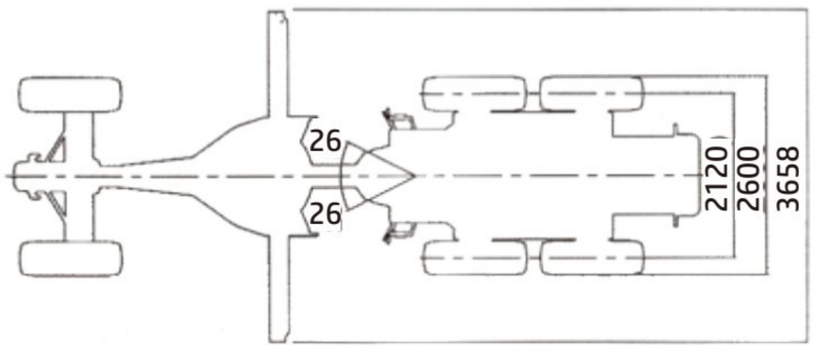




Dipindai dengan CamScanner

BDMG

# TECHINCAL PARAMETERES BD9190

| | Name | Data |
|---|---|---|
| **Basic** | Operating weight | 15600 kg |
| | Moldboard Dimensions | 3658×580×20 mm |
| **Engine** | Engine model | CUMMINS 6CTA8.3 |
| | Type | Turbocharged,Water cooled |
| | Rated power | 142kW(193 HP)/2200 rpm |
| | Max. torque | 860 N.m/1500 rpm |
| | Fuel tank | 370 L |
| **Drive Train & Tandem Drive** | Transmission type | Electro-hydraulic powershift |
| | Shift type | Single handle, Lock in the neutral |
| | Front axle ground clearance | 610 mm |
| | Front axle oscillation angle | ±16° |
| | Front wheel lean angle | 17° |
| | Rear axle type | Full-floating with NO-SPIN differential |
| | Tandem oscillation | 13°(F/R) |
| | Final driving | Spiral bevel gear, single stage reduction |
| | Tandem drive | Double row roller-chains |
| | Tire size | 17.5-25-12PR L-3 |
| | Forward speed-6 gears | 6.5 /11.4 / 14.6 / 24.8 / 30.0 / 49.2 km/h |
| | Reverse speed-3 gears | 6.5 / 14.6 / 30.0 km/h |



Dipindai dengan CamScanner

| | | |
|---|---|---|
| **Brakes** | Service brake | Full hydraulic drum brake |
| | Parking brake | Flexible shaft control actuated inner-expanding drum brake |
| **Steering System** | Max. front wheel steering angle | 49° (L/R) |
| | Max. frame steering angle | 26° (L/R) |
| | Min. turning radius (front tires) | 7300 mm |
| | Steering system pressure | 16 Mpa |
| | Max. steering system flow | 55 L/min |
| **Hydraulic System** | Max.Flow (at rated engine speed) | 99 L/min |
| | Max.Working pressure | 17.5 MPa |
| | Hrdraulic oil capacity | 65 L |
| **Blade Range** | Moldboard side shift-left | 965 mm |
| | Moldboard side shift-right | 965 mm |
| | Max. shoulder reach-left | 2341 mm |
| | Max. shoulder reach-right | 2346 mm |
| | Max. lift above ground | 450 mm |
| | Max. grading depth | 535 mm |
| | Max.blade angle | 90° (L/R) |
| | Blade tip angle | 29-77° |

## OPTIONAL

| |
|---|
| Automatic leveling device |
| ROPS frame |
| Front blade (Blade width:2501mm, Max ground height:579mm) |
| Scarifler (with 11 teeth, Digging width:1325mm,Digging depth:212mm) |
| Ripper (No. of shanks:3 or 5,Digging width:2196mm,Digging depth:436mm |

## FEATURES

| |
|---|
| Cummnis strong & powerful engine. Direct injection, Water Cooled |
| ZF technology transmission with single handle. |
| Imported multil-way valve and booster |
| Full-closed cabin with the visibility up to 47%. |
| Equiped with driectional headlight, front and rear work lights. |

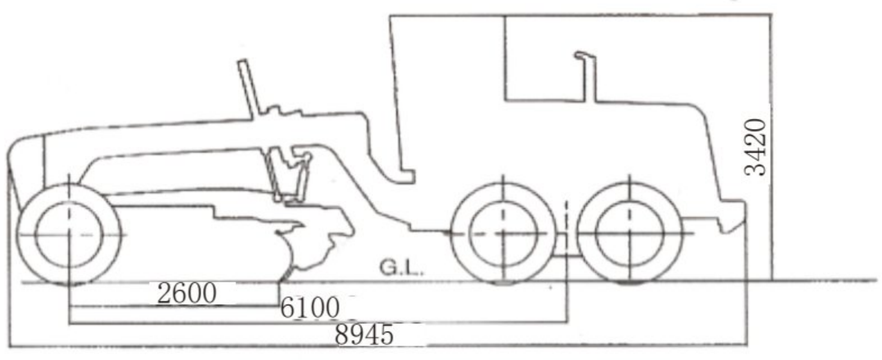


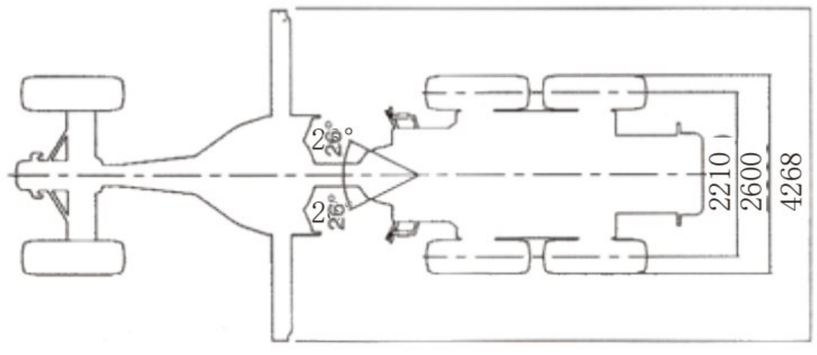




Dipindai dengan CamScanner

# BD9220 -TECHNICAL SPESIFICATIONS

| | Name | Data |
|---|---|---|
| **Basic** | Operating weight | 16100 kg |
| | Moldboard Dimensions | 4420×610×20 mm |
| **Engine** | Engine model | Cummins 6CTA8.3-C215 |
| | Type | Turbocharged,Water cooled |
| | Rated power | 160kW(215 HP)/2200 rpm |
| | Max. torque | 908 N.m/1500 rpm |
| | Fuel tank | 370 L |
| **Drive Train & Tandem Drive** | Transmission type | Electro-hydraulic powershift |
| | Shift type | Single handle, Lock in the neutral |
| | Front axle ground clearance | 610 mm |
| | Front axle oscillation angle | ±16° |
| | Front wheel lean angle | 17° |
| | Rear axle type | Full-floating with NO-SPIN differential |
| | Tandem oscillation | 13°(F/R) |
| | Final driving | Spiral bevel gear, single stage reduction |
| | Tandem drive | Double row roller-chains |
| | Tire size | 17.5-25-14PR L-3 |
| | Forward speed-6 gears | 6.7/10.2 / 15.2 / 22.5 / 31.6 / 45.1 km/h |
| | Reverse speed-3 gears | 6.7 / 15.2 / 31.3 km/h |



Dipindai dengan CamScanner

| | | |
|---|---|---|
| **Brakes** | Service brake | Full hydraulic drum brake |
| | Parking brake | Flexible shaft control actuated inner-expanding drum brake |
| **Steering System** | Max. front wheel steering angle | 49° (L/R) |
| | Max. frame steering angle | 26° (L/R) |
| | Min. turning radius (front tires) | 7400 mm |
| | Steering system pressure | 16 Mpa |
| | Max. steering system flow | 55 L/min |
| **Hydraulic System** | Max.Flow (at rated engine speed) | 99 L/min |
| | Max.Working pressure | 17.5 MPa |
| | Hrdraulic oil capacity | 65 L |
| **Blade Range** | Moldboard side shift-left | 965 mm |
| | Moldboard side shift-right | 965 mm |
| | Max. shoulder reach-left | 2367 mm |
| | Max. shoulder reach-right | 2372 mm |
| | Max. lift above ground | 450 mm |
| | Max. grading depth | 535 mm |
| | Max.blade angle | 90° (L/R) |
| | Blade tip angle | 29-77° |

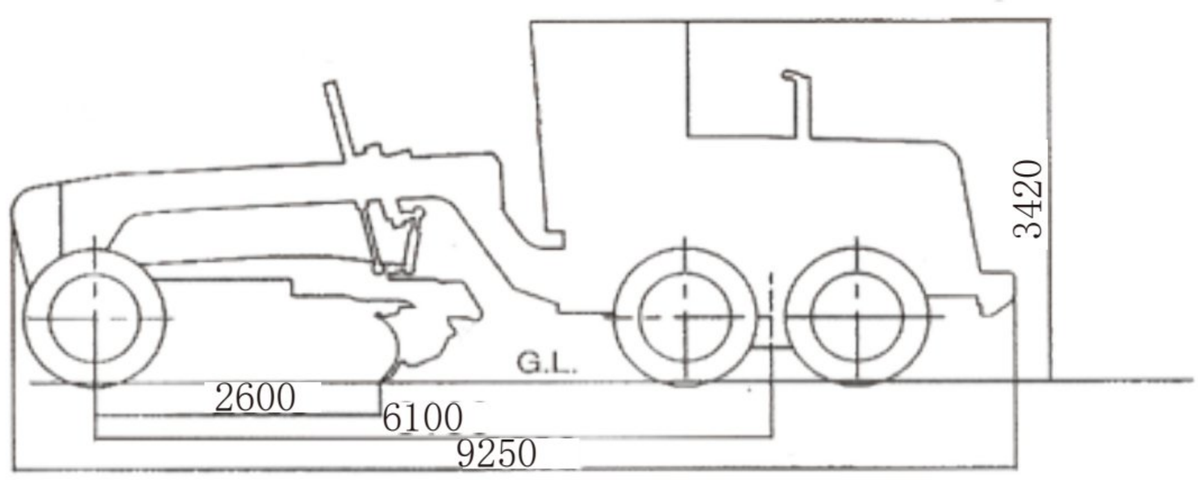


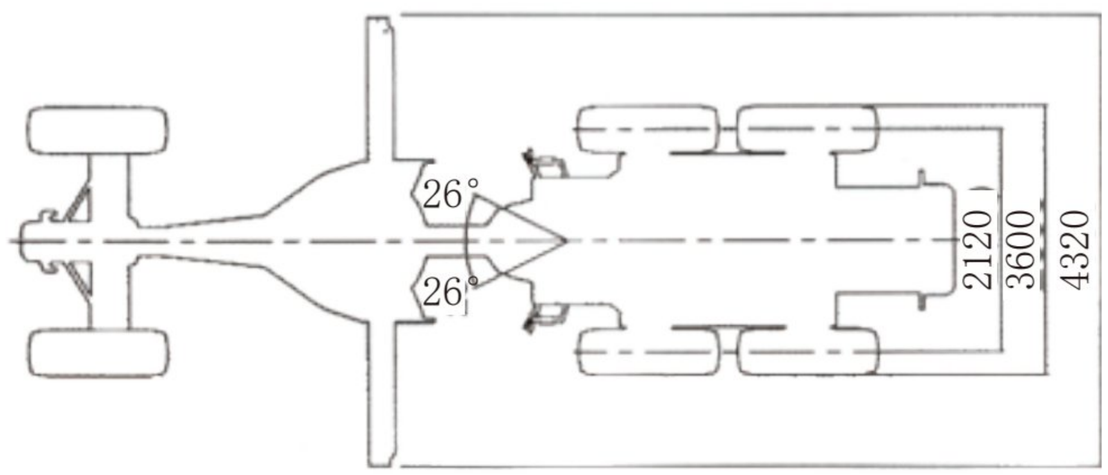




Dipindai dengan CamScanner

# BD520 -TECHNICAL SPESIFICATIONS

| | |
|---|---|
| OPERATING WEIGHT | 20000 KG |
| WEIGHT BURDEN ON FRONT DRUM | 10000 KG |
| WEIGHT BURDEN ON REAR WHEEL | 10000 KG |
| MIN GROUND CLEARANCE(H) | 430 MM |
| WHEELBASE (L1) | 3180 MM |
| GRADE ABILITY | 30% |
| L×W1XH (MM) | 6260×2388×3200 |
| MANUFACTURER | WEI CHAI |
| MODEL | WP6G175E301 |
| DISPLACEMENT | 29.2L |
| FUEL CONSUMPTION | 6.75L |
| RATED POWER | 129 KW |



Dipindai dengan CamScanner

| | |
|---|---|
| TRAVEL SPEED REVERSE | 2.3/4.5/9.6 KM/H |
| TIRE TYPE | 20.5-25-16PR |
| MIN TURNING RADIUS | 6500 MM |
| STEERING ANGLE" | 33° |
| SWING ANGLE | |
| WIDTH OF DRUM (W2) | 2130 MM |
| DIAMETER OF DRUM | 1600 MM |
| RIM THICKNESS OF DRUM | 40 MM |
| STATIC LINEAR LOAD | 469N/CM |
| VIBRATION TYPE | OPEN-LOOP HYDRAULIC VIBRATION |
| CENTRIFUGAL FORCE | 356/248 KN |
| VIBRATION FREQUENCY | 28 HZ |
| NOMINAL AMPLITUDE | 1.9/0.9 MM |
| SERVICE BRAKE | AIR BOOSTER CALIPER |
| | REAR AXLE BRAKE |
| PARKING BRAKE | SHAFT CONTROLLING |
| | BRAKE OF GEAR BOX |
| VOLTAGE | 24 V |
| CAPACITY | 120×2 AH |
| FUEL TANK CAPACITY | 335 L |
| HYDRAULIC TANK CAPACITY | 220 L |



Dipindai dengan CamScanner

# BD510 -TECHNICAL SPESIFICATIONS

| | Name | Data |
|---|---|---|
| BASIC | Operating Weight | 10000kg |
| | Weight Burden on Drum | 5000 kg |
| | Weight Burden on Wheel | 5000 kg |
| | Min Ground Clearance(h) | 440mm |
| | Wheelbase (L1) | 3135mm |
| | Grade Ability | 30% |
| | L×W1×H (mm) | 5975×2260×3250 |
| ENGINE | Manufacturer | YU CHAI |
| | Model | YC6B120-T20 |
| | Rated Power | 85 kW |
| | Rated Speed | 2200 rpm |
| | Emissions Standard | Nation Ⅱ |



Dipindai dengan CamScanner

| | | |
|---|---|---|
| DRIVE TRAIN | Drive Type | Mechanical Drive |
| | Travel Speed Forward | 1.9/3.3/9.1 km/h |
| | Travel Speed Reverse | 1.9/3.3 km/h |
| | Tire Type | 17.5-25 12PR |
| | Min. Turning Radius | 6500 mm |
| | Steering Angle | 30 ° |
| | Swing Angle | 10 ° |
| VIBRATION SYSTEM | Width of Drum (W2) | 2120 mm |
| | Diameter of Drum | 1520 mm |
| | Rim Thickness of Drum | 20 mm |
| | Static Linear Load | 235N/cm |
| | Vibration Type | Open-loop Hydraulic Vibration |
| | Centrifugal Force | 240/150 kN |
| | Vibration Frequency | 28 Hz |
| | Nominal Amplitude | 1.8/0.9 mm |
| BRAKE SYSTEM | Service Brake | Air Booster Caliper Rear Axle Brake |
| | Parking Brake | Shaft Controlling Brake of Gear Box |
| ELECTRIC | Voltage | 24 V |
| | Capacity | 120×2 Ah |
| SERVICE REFILL CAPACITY | Fuel Tank Capacity | 240 L |
| | Hydraulic Tank Capacity | 240 L |



Dipindai dengan CamScanner

## CONFIGURATION

| |
|---|
| YU CHAI Engine |
| Machanical Transmission |
| Jinda Dry-type Drive Axle |
| Open-loop Hydraulic Vibration System |
| ROPS/FOPS |
| Air Conditioner |
| Standard Steering System |
| Pressure Measuring Tie-in |

## OPTIONAL

| |
|---|
| Coated Cams |

## PRODUCT FEATURES

| |
|---|
| Single frequency, dual amplitude, open-loop vibratory roller, PERMCO hydraulic components. |
| Steel drum made of high strength metal material with well wear resistance impress resistance. |
| Panoramic cab, angle-adjustable steering wheel, the design according to ergonomics. |
| Two brake systems containing hand brake and foot brake to make sure the safety of operator and machine. |
| Engine hood is opened backward through manual operation and oil cylinder booster , large space for repair and maintenance. |
| Equiped with A/C system as standard to make operating environment comfortable. |

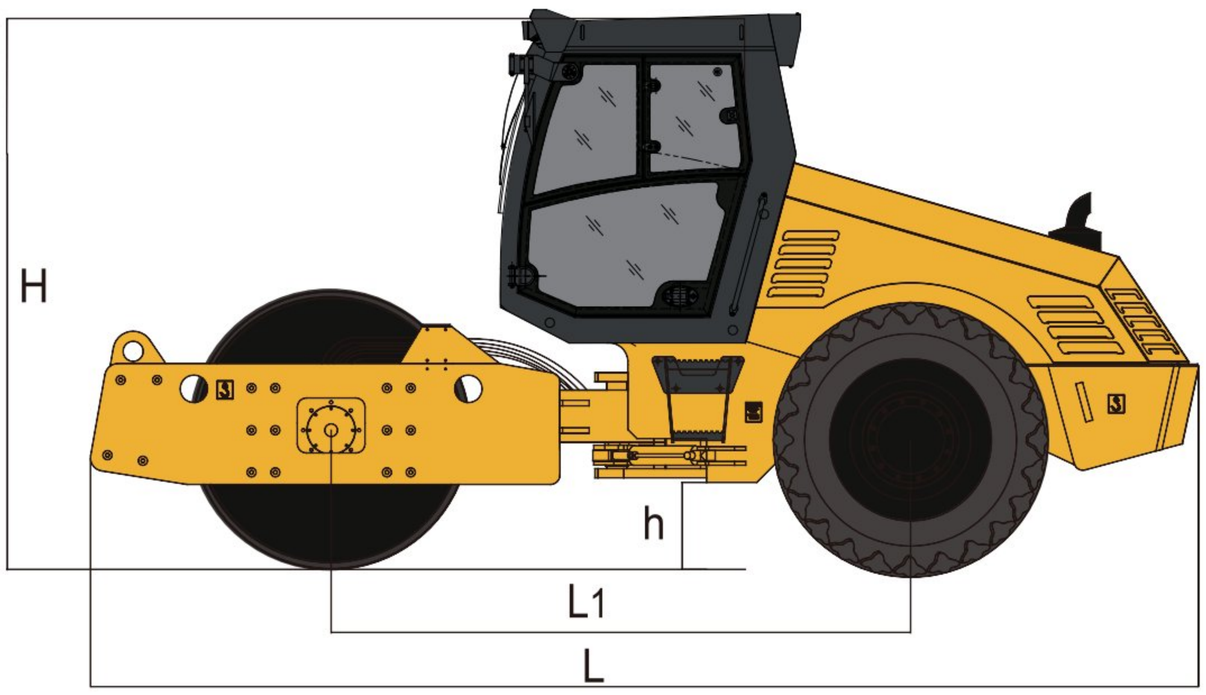


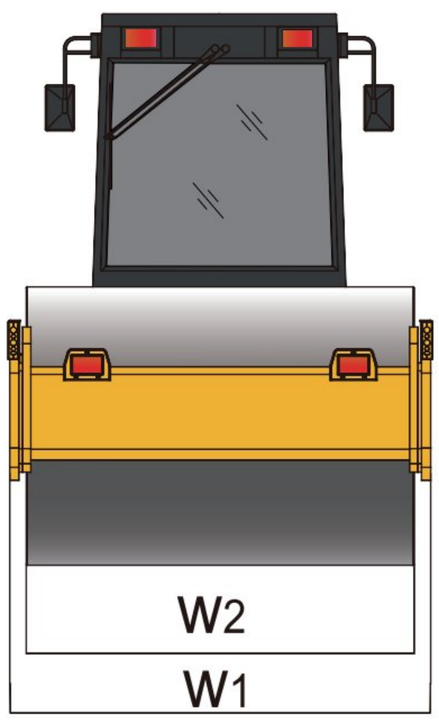




Dipindai dengan CamScanner

# BRANCH

Indonesia

Malaysia

Thailand

Kamboja

Turki

# LOKASI CABANG

Dipindai dengan CamScanner

# ALAMAT CABANG

| | |
|---|---|
| JAKARTA | Jl. Husein Sastranegara No.89B, Jurumudi, Kec. Kalideres, DKI Jakarta |
| MEDAN | Harmoni Comercial Estate Jl. Bintang Terang Medan Binjai, Blok Harmoni 5 no.88, Puji Mulyo, Kec Sunggal Deli Serdang, Sumut |
| RANTAU PRAPAT | Jl H adam Malik Komplek Ruko Adam Malik no A15, Rantau prapat , Labuhan Batu, Sumut |
| PEKANBARU | Pergudangan Panam Bizpark Blok B-12A Jl.Raya Pekan Baru, Bangkinang Kel.Tuah Madani Kec.Tampan Pekan Baru RIAU |
| PALEMBANG | Maju BIZ Complex Jl Letjen Harun Sohar No 999 Kel. Kebun Bunga, Kec. Sukarami Palembang, Sumatera Selatan |
| LAMPUNG | Gudang Bahari Utama Jl Yos Sudarso no 333, Blok I/10 RT02. LK 1 , Kel Garuntang, Kecamatan Bumi Waras, Bandar Lampung |
| YOGYAKARTA | Jalan Ringroad Barat , Palemgurih Rt 06,Rw II no 213, Banyuraden, Kec gamping, Sleman, Daerah Istimewa Yogyakarta |
| LUMAJANG | Jl. Pasirian 84, Rekesan, Kec. Sumbersuko, Kab.Lumajang, Jawa Timur |
| SURABAYA | Legundi Sumo Estate A3 Jl Raya Legundi, Krikilan, Driyorej,Gresik Rege, Jawa Timur |
| KUPANG | Jl. S.K Lerik NO. 16, Kelapa Lima, Kota Kupang |
| BANJARMASIN | Gudang/Ruko Agra Budi Jl. Trans Kalimantan, RT/RW 07/02 Kel. Berangas Timur, Kec. Alalak Kab. Barito Kuala Kalimantan Selatan |
| PALANGKARAYA | Jl. Tjilik Riwut KM8, Palangkaraya, Kalimantan Tengah |
| PONTIANAK | Jl. Adisucipto Pergudangan Ocean 88 F4, Sungai Raya, Kab. Kubu Raya Kalimantan Barat |
| SAMARINDA | Mangkupalas Bussines Center, Blok A23, Jalan Trikora, Palaran, Samarinda, Kalimantan Timur |
| BERAU | Jl. Sultan Agung, Rinding, Kec.TJ. Redep, Kab.Berau, Kalimantan Timur |
| MAKASSAR | T One Bussines Park Blok B/3 Jl Tol Lama, Kel. Parangloe, Kec. Tamalanrea, Makassar, Sulawesi Selatan |
| MANADO | Kawasan Pergudangan Yongli Business Park. Jl Ring Road, Kel.Tingkulu, Kec.Wenang, Kota Manado |
| KENDARI | Jl. Brigjen Katamso, Puosu Jaya, Kec. Konda, Kab Konowe Selatan, Sulawesi Tenggara |
| JAYAPURA | Jl. Camat Lama No.7 Kelurahan Sentani Kota, Kec Sentani, Kab Jayapura, Papua |



Dipindai dengan CamScanner