ARTWORK APPROVAL FORM

ORDER DETAILS		COVER (A1/A2)		INNER COVER (B1/B2 - C1/C2)		SHEETS (D1/D2)	
ORDER NUMBER:	X	TECHNIQUE:	X	TECHNIQUE:	X	TECHNIQUE:	OFFSET
ITEM CODE:	NOTEA5	COLOUR:	CMYK	COLOUR:	X	COLOUR:	BLACK
QUANTITY:	X	SIZE:	AS ARTWORK	SIZE:	AS ARTWORK	SIZE:	AS ARTWORK
ELASTIC BAND:	X	LAMINATION:	SHINY / MATT	X:	X	PAPER TYPE:	ST. SQUARED
RIBBON:	X	X:	X:	X:	X	X:	X
PEN HOLDER:	NONE						

SCALE 1:4

GENERAL COMMENTS:

THE FINAL OUTCOME OF THE COLOURS WILL BE AFFECTED DEPENDING OF THE LAMINATION TYPE.

DUE TO THE NATURE OF FULL COLOUR PRINTING THE OUTCOME OF THE FINAL COLOUR RESULT CAN BE SLIGHTLY DIFFERENT IN A REAL SAMPLE.

WATERMARK EFFECT MIGHT BE DIFFERENT FROM EXPECTATION.THE FINAL EFFECT CAN BE TOO DARK OR TOO BRIGHT.

ATTENTION:

SKETCH OF COMPONENT PLACEMENT

OUTER COVER

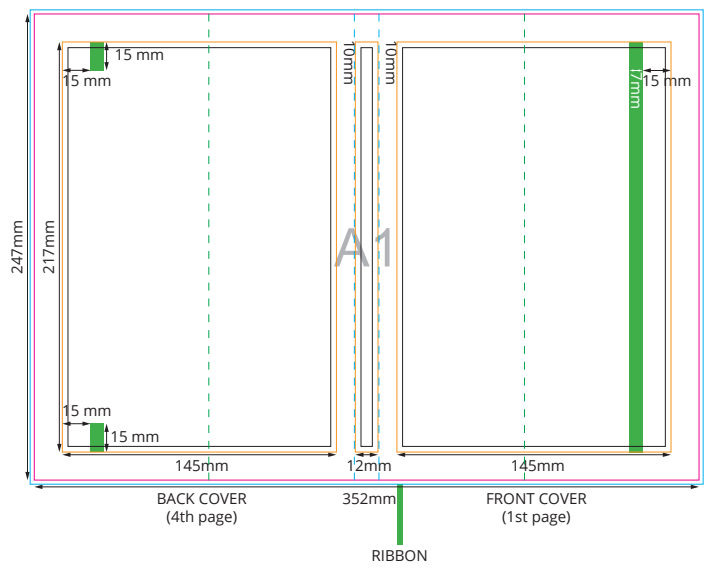

TOP ENDSHEET - FRONT

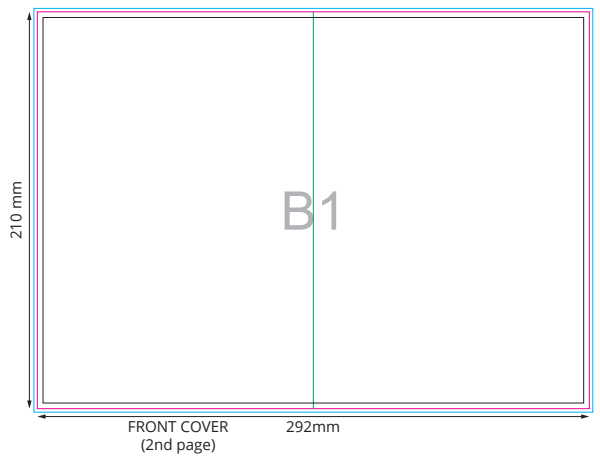

TOP ENDSHEET - BACK

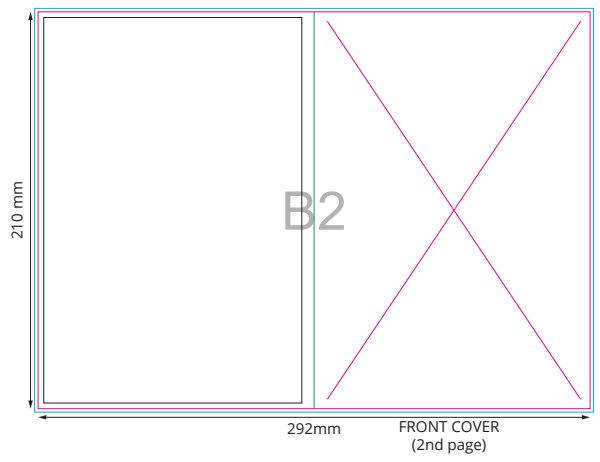

BOTTOM ENDSHEET - FRONT

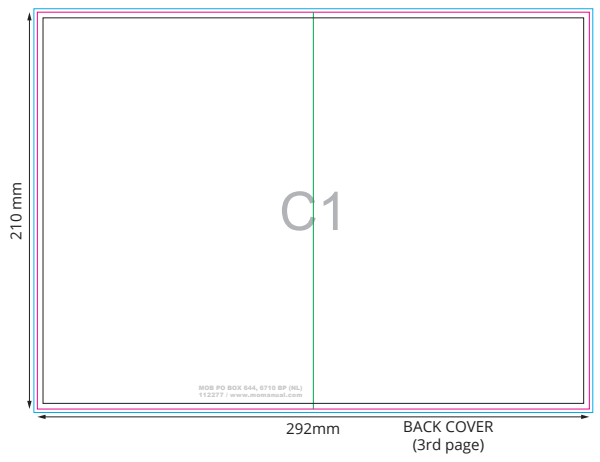

BOTTOM ENDSHEET - BACK

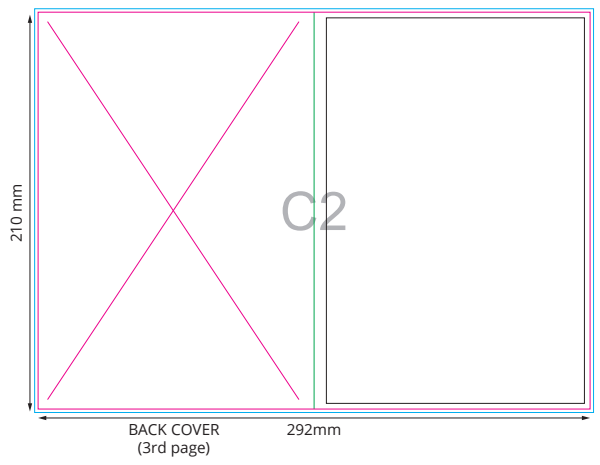

PUR NOTEPAD - BACK

PUR NOTEPAD - FRONT

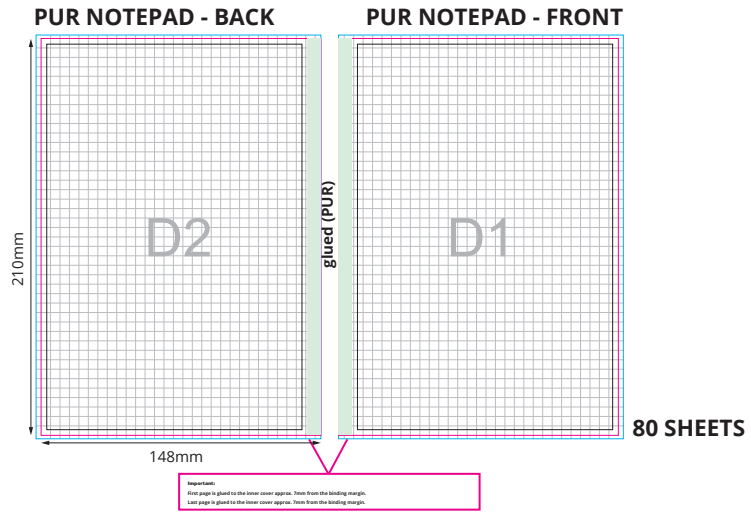

yourChoice

Key:

—Finished component size

—Bleed area. In case of bleed imprint, please extend it until blue line

—Safe print area. Keep all important text and graphics within this area

—Solid Board

·····Axis of the Crease

·····Visual spine edge

A1

B1

B2

C1

MOB PO BOX 644, 6710 BP (NL)
112277 / www.momanual.com

C2

D1

D2