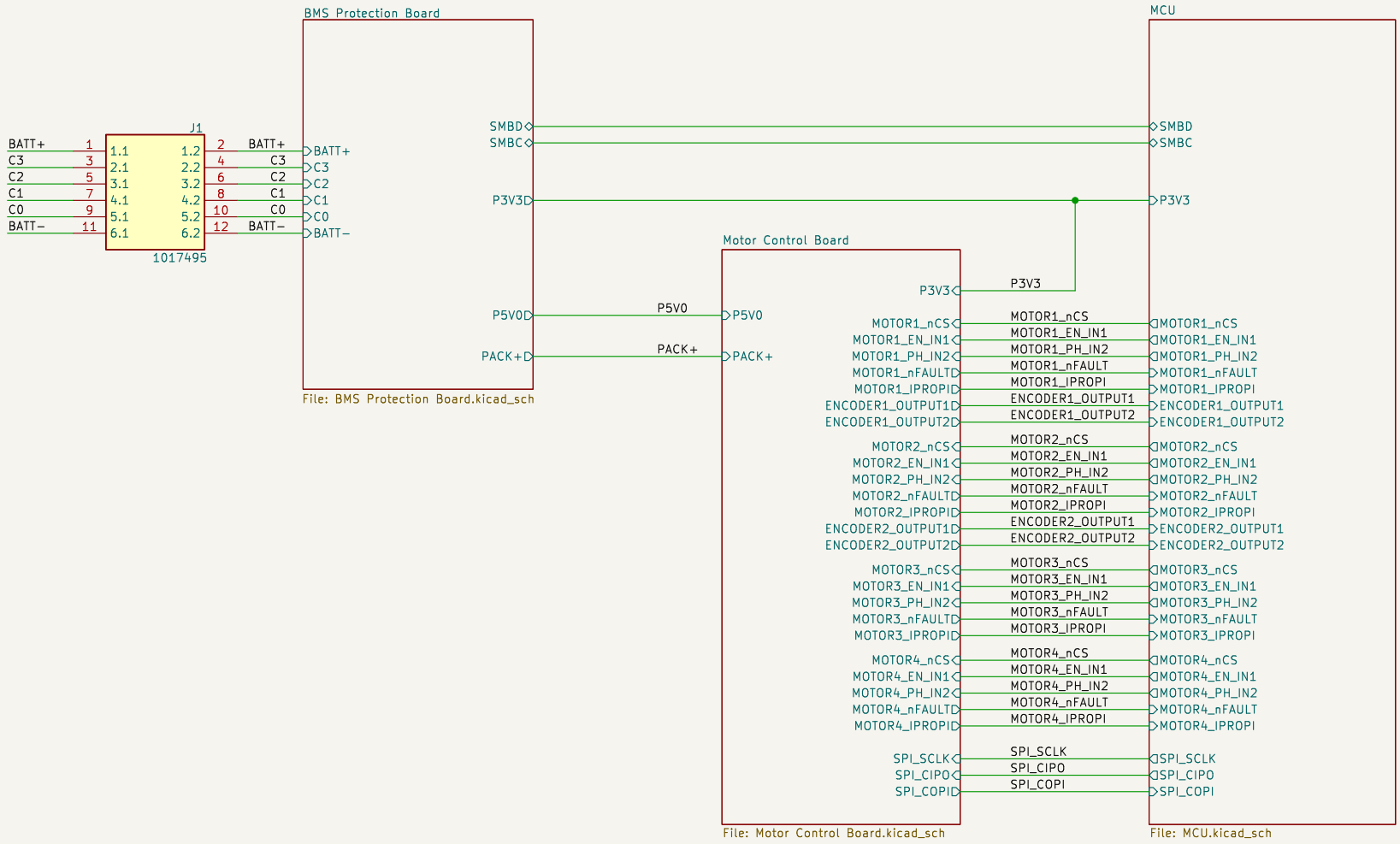

Sheet: /
File: STAR.kicad_sch

Title:

Size: A4	Date:	**Rev:**
KiCad E.D.A. 9.0.5		Id: 1/7

BMS Protection Board for 3S Battery Pack
In/Out: min voltage: 9.6 V, nominal voltage: 11.1 V, max voltage: 12.6 V
Output: 20A continuous discharge current
Min Each Cell set to 3.2 V, Max Each Cell set to 4.2 V

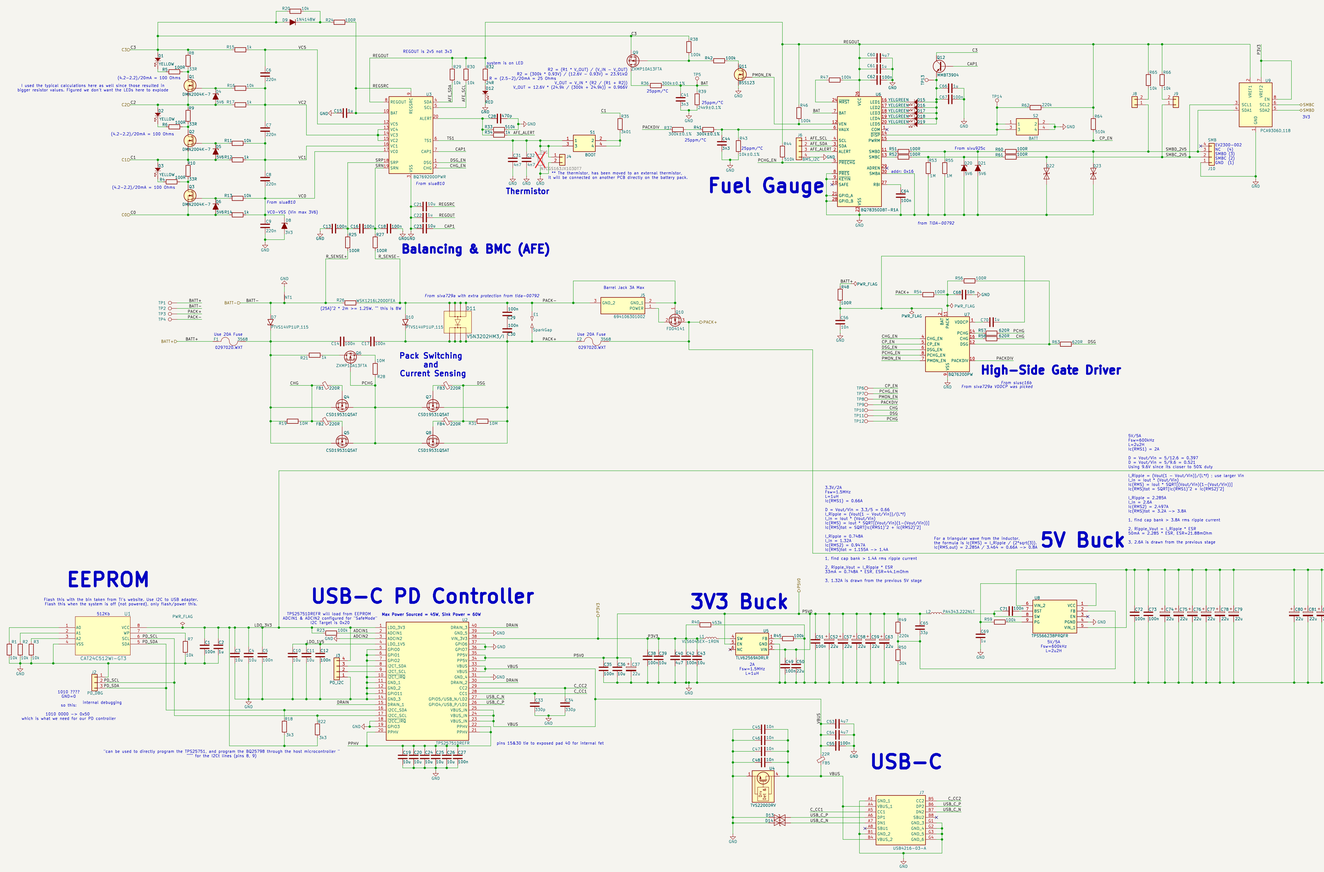

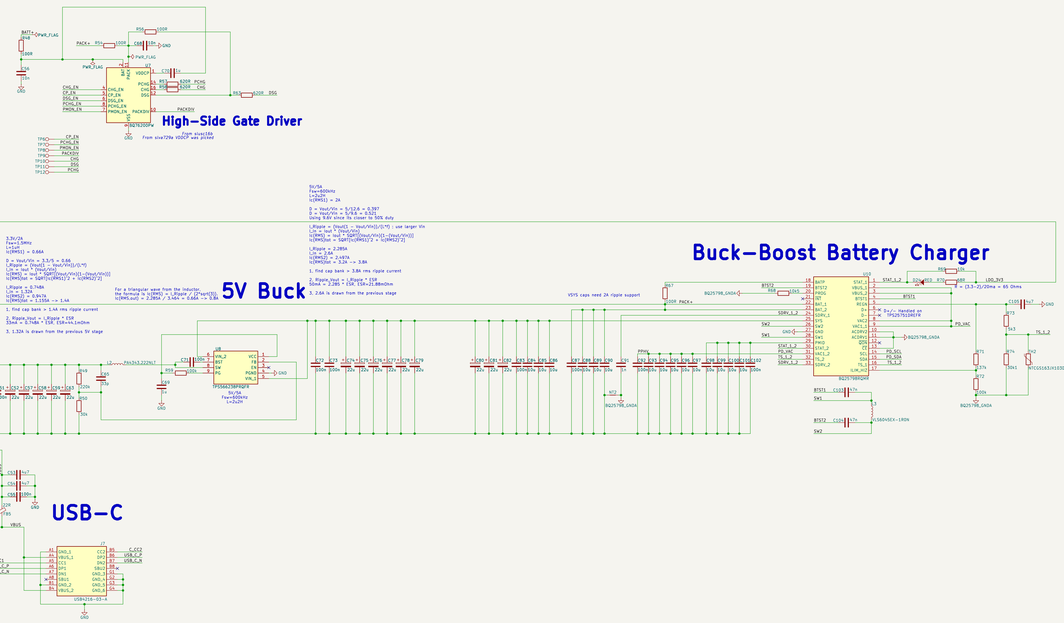

Sheet: /BMS Protection Board/
File: BMS Protection Board.kicad_sch

Title:		
Size: A0	Date:	Rev:
KiCad E.D.A. 9.0.5		Id: 2/7

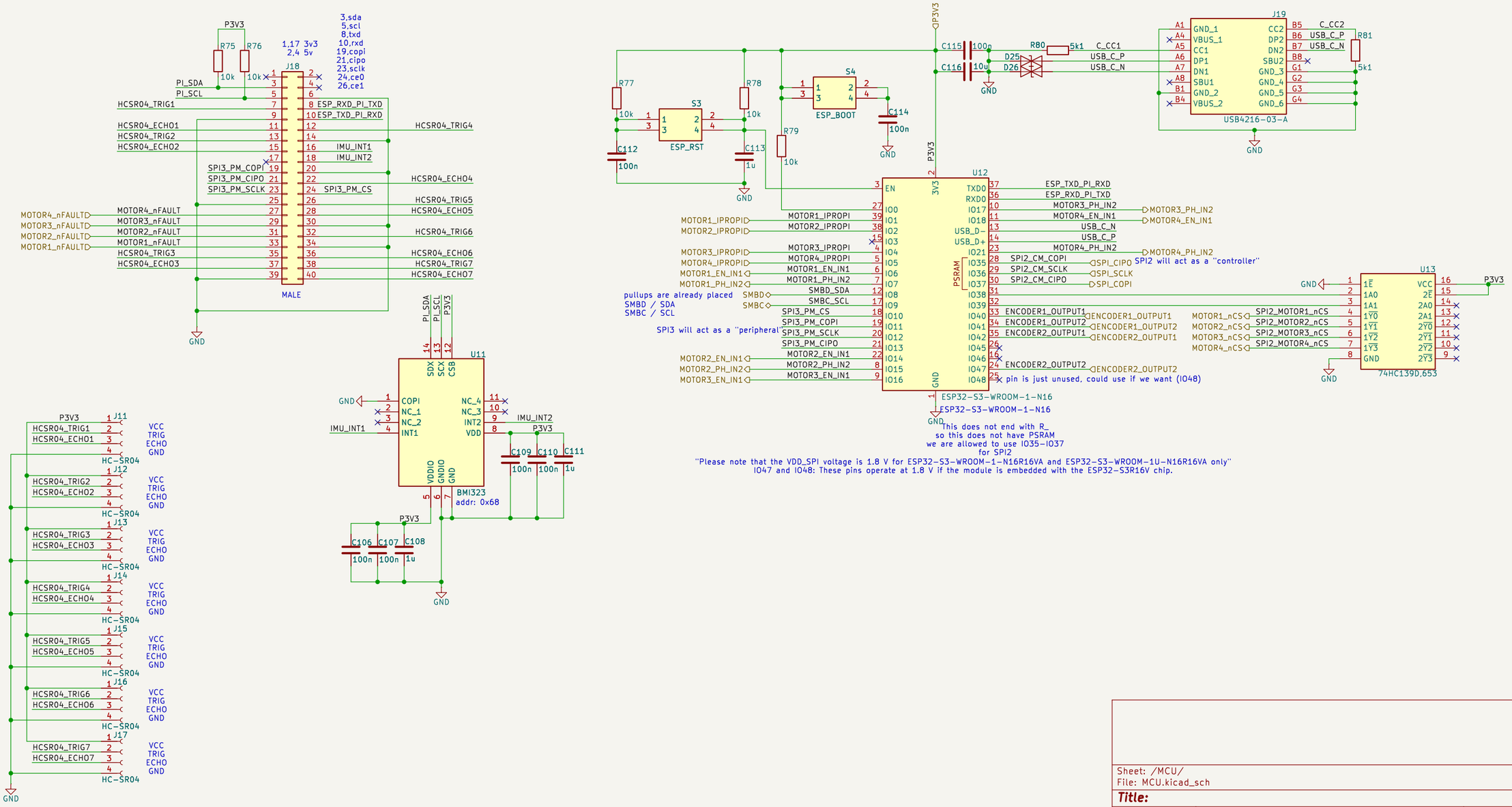

Sheet: /MCU/
File: MCU.kicad_sch

Title:

Size: A3	Date:	Rev:
KiCad E.D.A. 9.0.5		Id: 3/7

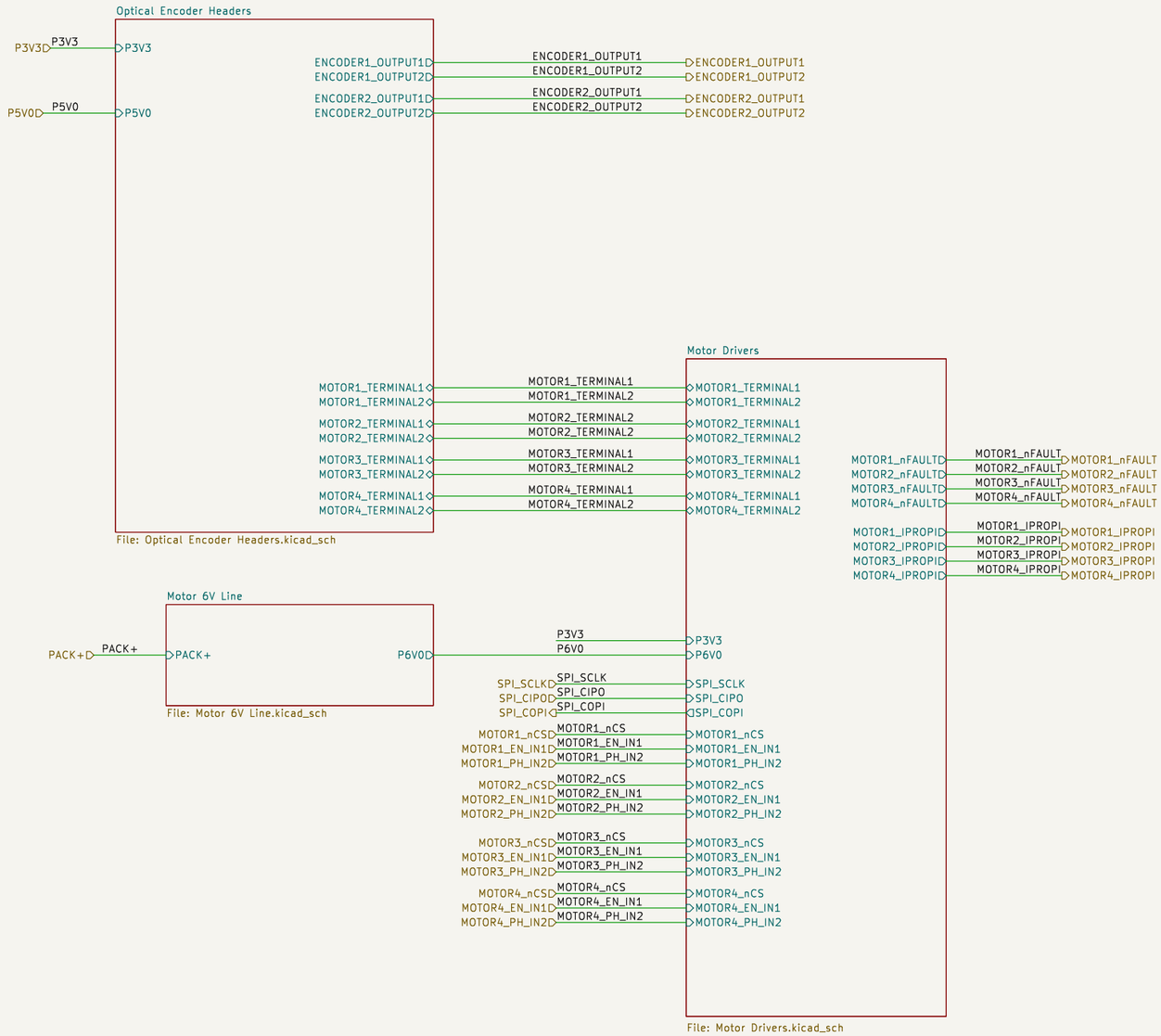

Sheet: /Motor Control Board/
File: Motor Control Board.kicad_sch

Title:

Size: A3	Date:	Rev:
KiCad E.D.A. 9.0.5		Id: 4/7

6V/20A
L=440nH
f=1.2MHz
Vin=[9.6,12.6]

D = Vout/Vin = 6/12.6 = 0.476 ; use for worst-case input ripple
I_Ripple = (Vout(1 - Vout/Vin))/(L*f) ; use larger Vin
I_In = Iout * (Vout/Vin) ; use smaller Vin for max current
Ic(RMS,in) = Iout * SQRT[D*(1-D)]
Ic(RMS,out) = I_Ripple / (2*sqrt(3))

I_Ripple = 5.95A
I_In = 12.5A
Ic(RMS,in) = 9.99A -> 12A
Ic(RMS,out) = 1.72A -> 2.1A

1, Input cap bank > 12A rms ripple current
2, Output cap bank > 2.1A rms ripple current

3, Ripple_Vout = I_Ripple * ESR
60mA = 5.95A * ESR, ESR=10.1mOhm

4, 12.5A is the max average current drawn from the source

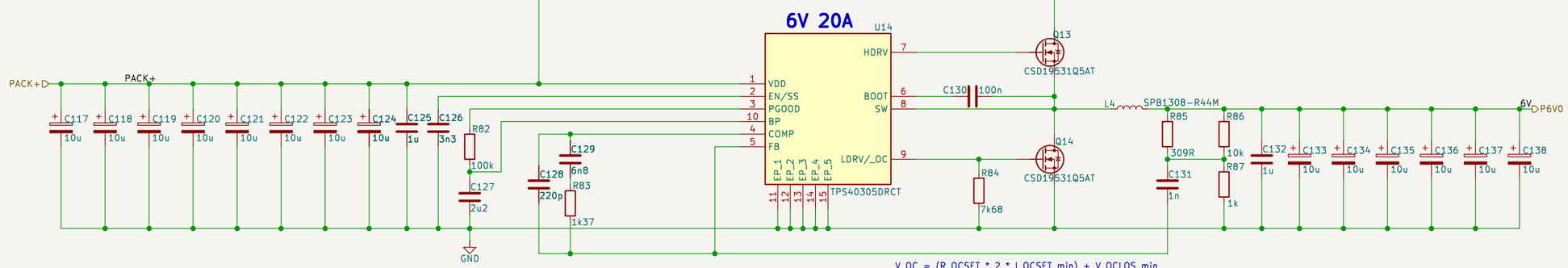

V_OC = (R_OCSET * 2 * I_OCSET_min) + V_OCLOS_min
V_OC = (7.68 kΩ * 2 * 9.5 μA) + (-8 mV)
V_OC = 137.9 mV

I_valley = V_OC / R_DS(on)
I_valley = 137.9 mV / 7.8 mΩ
I_valley = 17.68 A

I_SCP = I_valley + (I_RIPPLE / 2)
I_SCP = 17.68 A + (5.95 A / 2)
I_SCP = 20.66 A

Sheet: /Motor Control Board/Motor 6V Line/
File: Motor 6V Line.kicad_sch

Title:

Size: A3	Date:	Rev:
KiCad E.D.A. 9.0.5		Id: 5/7

(1) Red	motor power (connects to one motor terminal)
(2) Black	motor power (connects to the other motor terminal)
(3) Green	encoder GND
(4) Blue	encoder Vcc (3.5 – 20 V)
(5) Yellow	encoder A output
(6) White	encoder B output

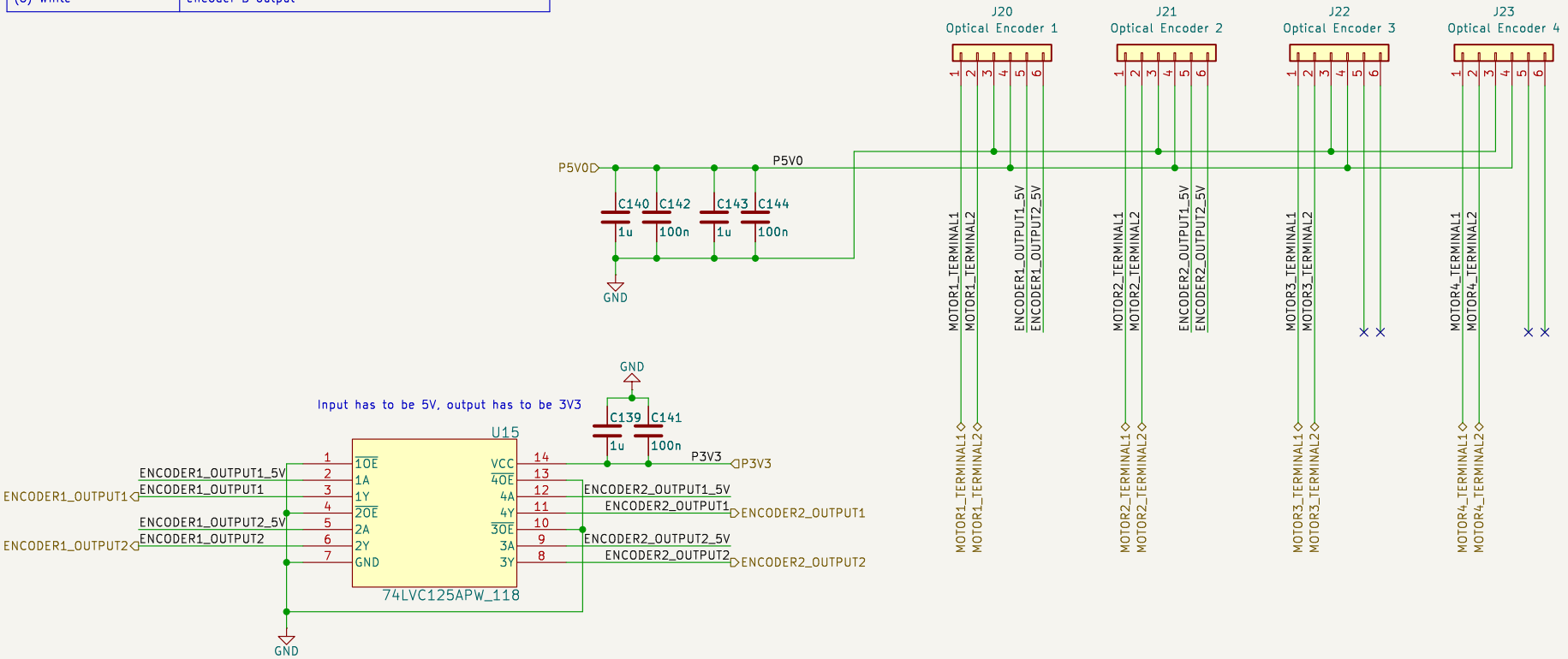

Sheet: /Motor Control Board/Optical Encoder Headers/
File: Optical Encoder Headers.kicad_sch

Title:

Size: A4	Date:	**Rev:**
KiCad E.D.A. 9.0.5		Id: 6/7

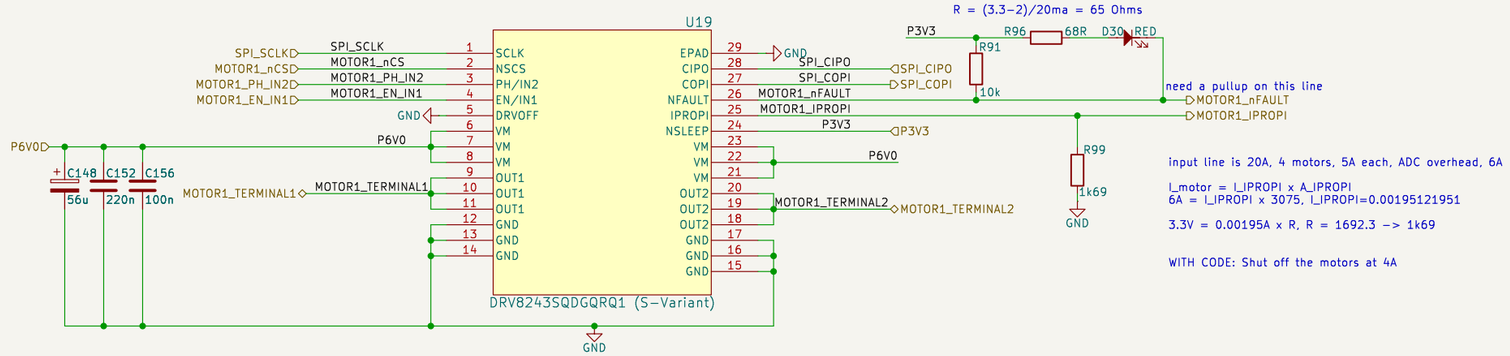

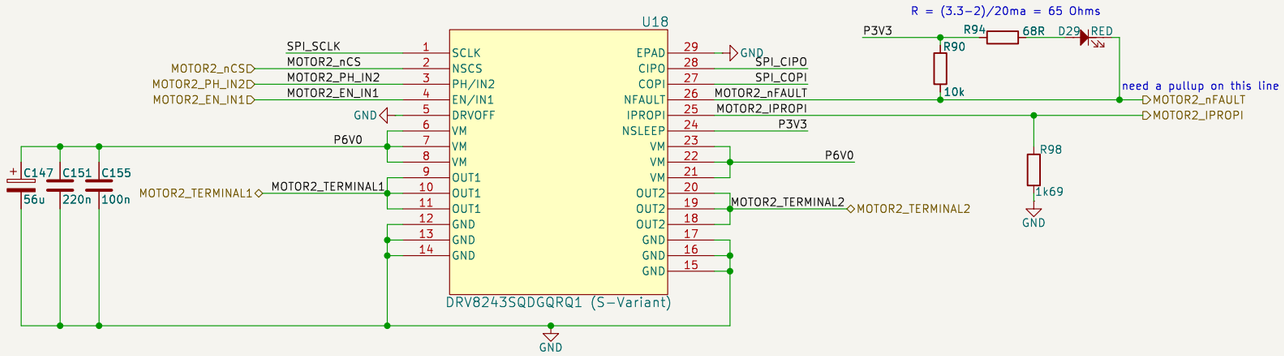

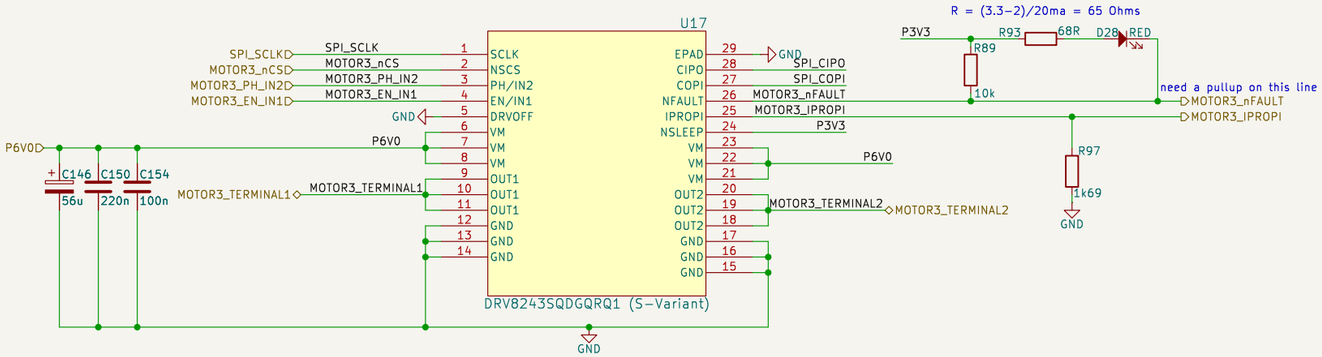

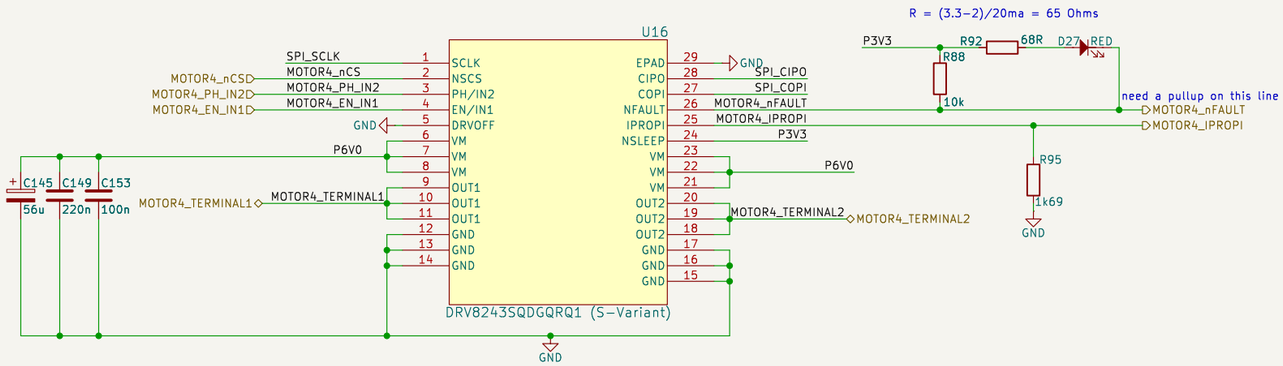

Sheet: /Motor Control Board/Motor Drivers/
File: Motor Drivers.kicad_sch

Title:

Size: A3	Date:	Rev:
KiCad E.D.A. 9.0.5		Id: 7/7