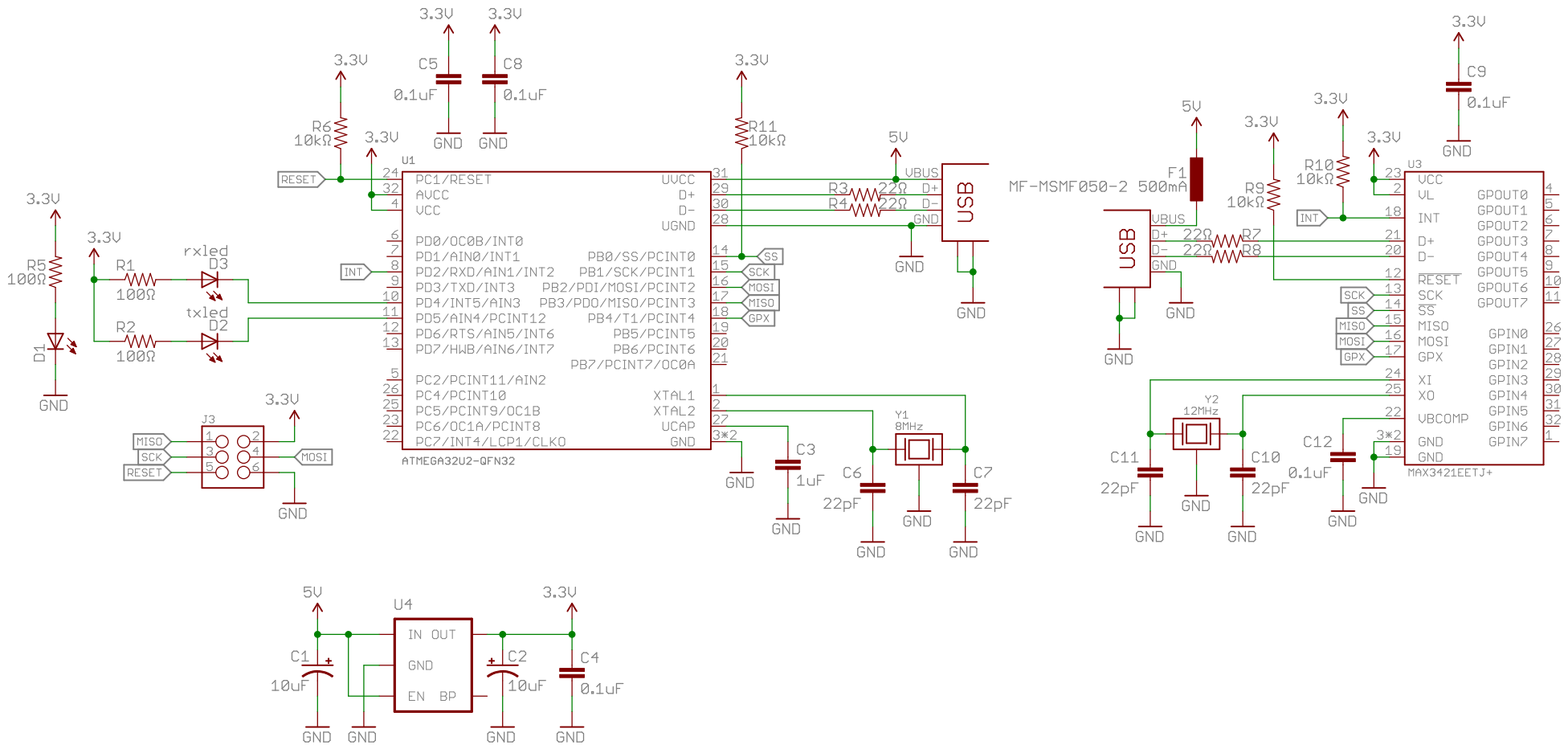
U1
ATMEGA32U2-QFN32
PC1/RESET
AVCC
VCC
PD0/OC0B/INT0
PD1/AIN0/INT1
PD2/RXD/AIN1/INT2
PD3/TXD/INT3
PD4/INT5/AIN3
PD5/AIN4/PCINT12
PD6/RTS/AIN5/INT6
PD7/HWB/AIN6/INT7
PC2/PCINT11/AIN2
PC4/PCINT10
PC5/PCINT9/OC1B
PC6/OC1A/PCINT8
PC7/INT4/LCP1/CLKO
UVCC
D+
D-
UGND
PB0/SS/PCINT0
PB1/SCK/PCINT1
PB2/PDI/MOSI/PCINT2
PB3/PDO/MISO/PCINT3
PB4/T1/PCINT4
PB5/PCINT5
PB6/PCINT6
PB7/PCINT7/OC0A
XTAL1
XTAL2
UCAP
GND
RESET
INT
SS
SCK
MOSI
MISO
GPX
3.3V
5V
GND
C5
0.1uF
C8
0.1uF
R6
10kΩ
R11
10kΩ
R3
22Ω
R4
22Ω
VBUS
USB
R5
100Ω
D1
R1
100Ω
R2
100Ω
rxled
D3
txled
D2
J3
MISO
SCK
RESET
MOSI
C3
1uF
C6
22pF
Y1
8MHz
C7
22pF
U3
MAX3421EETJ+
F1
MF-MSMF050-2 500mA
R9
10kΩ
R10
10kΩ
R7
22Ω
R8
22Ω
C9
0.1uF
VCC
VL
INT
D+
D-
RESET
SCK
SS
MISO
MOSI
GPX
XI
XO
VBCOMP
GND
GPOUT0
GPOUT1
GPOUT2
GPOUT3
GPOUT4
GPOUT5
GPOUT6
GPOUT7
GPIN0
GPIN1
GPIN2
GPIN3
GPIN4
GPIN5
GPIN6
GPIN7
Y2
12MHz
C11
22pF
C10
22pF
C12
0.1uF
U4
IN
OUT
GND
EN
BP
C1
10uF
C2
10uF
C4
0.1uF