Zephyr Sensor Fusion with MicroBlaze V on Kria KR260 and OpenAMP

Creating VIVADO Design and Generating the SDT

A. Creating VIVADO Design

The detail step of VIVADO design and Zephyr project build is briefed at here - README.md . While at this document we will quickly summarize the VIVADO project steps and generating the device tree from the VIVADO generated XSA.

1. VIVADO Block design

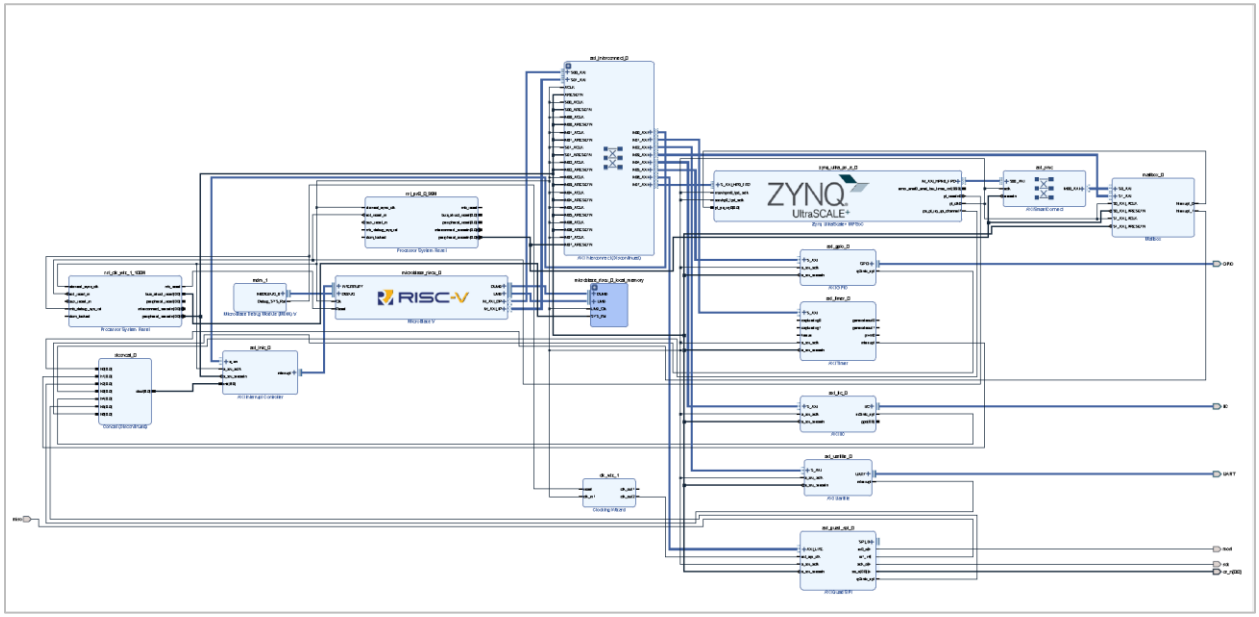

2. Microblaze IP Block Automation option

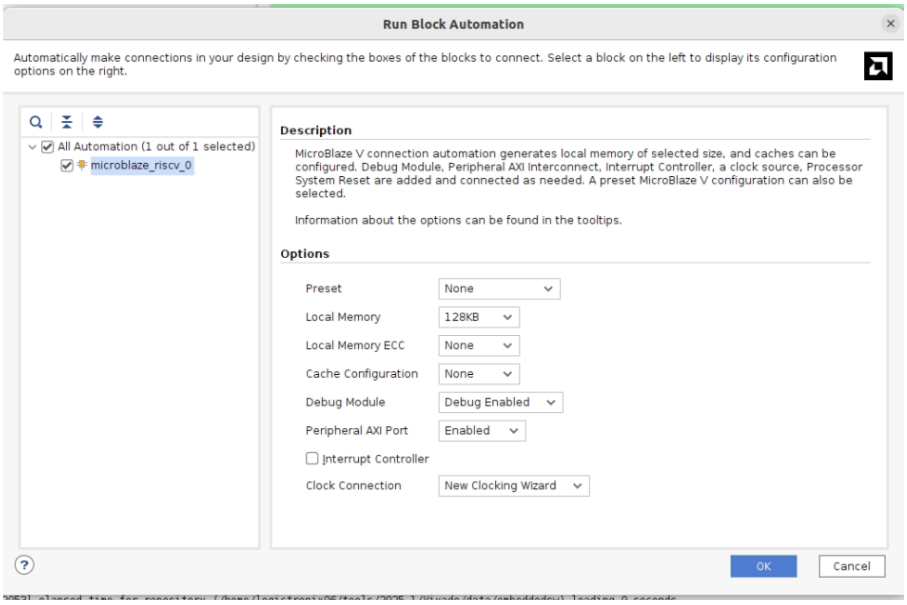

Microblaze IP Config:

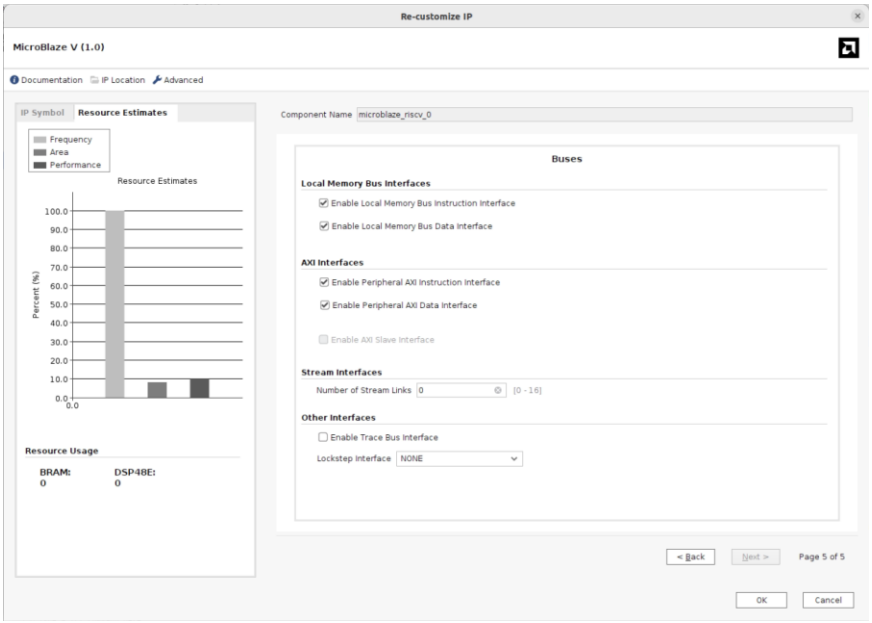

Microblaze V minimal block design with local memory and AXI interface ports enabled:

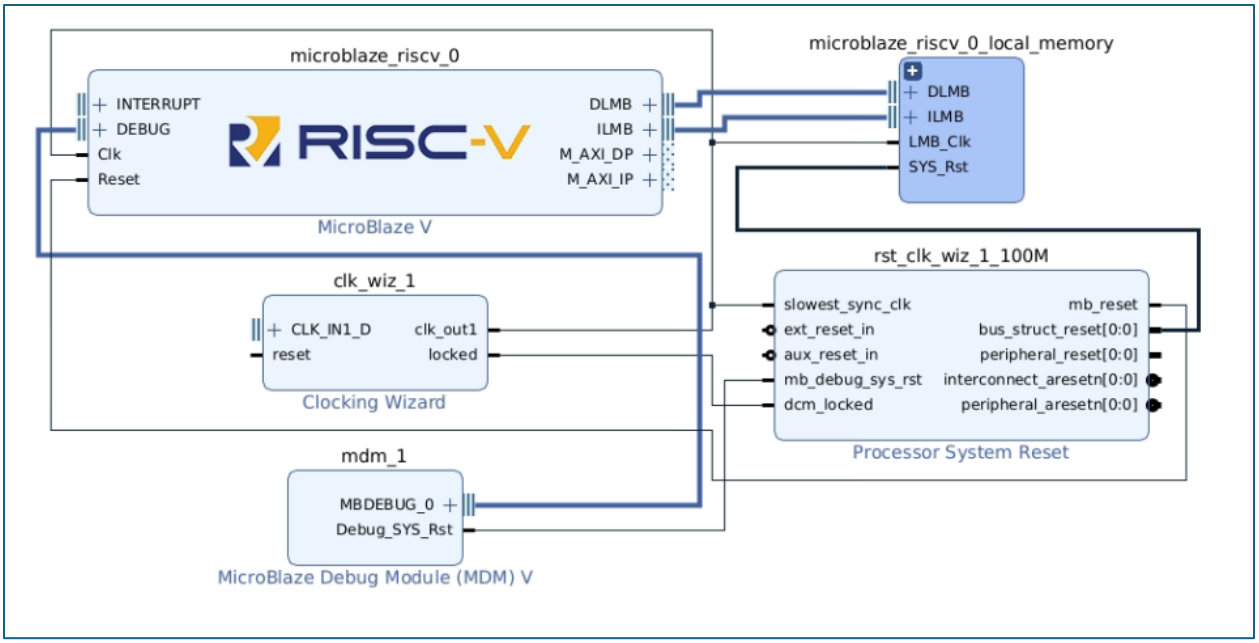

3. VIVADO Address Editor

Diagram | Address Editor | Address Map

Assigned (23) | Unassigned (0) | Excluded (2) | Hide All

Name	Interface	Slave Segment	Master Base Address	Range	Master High Address
Network 0 (/microblaze_riscv_0/Data, /microblaze_riscv_0/Instruction)					
/microblaze_riscv_0					
/microblaze_riscv_0/Data (32 address bits : 4G)					
/axi_gpio_0/S_AXI	S_AXI	Reg	0x4000_0000	64K	0x4000_FFFF
/axi_iic_0/S_AXI	S_AXI	Reg	0x4080_0000	64K	0x4080_FFFF
/axi_intc_0/S_AXI	s_axi	Reg	0x4120_0000	64K	0x4120_FFFF
/axi_quad_spi_0/AXI_LITE	AXI_LITE	Reg	0x44A0_0000	64K	0x44A0_FFFF
/axi_timer_0/S_AXI	S_AXI	Reg	0x41C0_0000	64K	0x41C0_FFFF
/axi_uartlite_0/S_AXI	S_AXI	Reg	0x4060_0000	64K	0x4060_FFFF
/mailbox_0/S1_AXI	S1_AXI	S1_AXI_Reg	0x4360_0000	64K	0x4360_FFFF
/microblaze_riscv_0_local_memory/dlmb_bram_if_cr	SLMB	Mem	0x0	128K	0x1_FFFF
/zynq_ultra_ps_e_0/SAXIGP2	S_AXI_HP0_FPD	HP0_DDR_LOW	0x2000_0000	512M	0x3FFF_FFFF
/zynq_ultra_ps_e_0/SAXIGP2	S_AXI_HP0_FPD	HP0_LPS_OCM	0xFF00_0000	16M	0xFFFF_FFFF
/zynq_ultra_ps_e_0/SAXIGP2	S_AXI_HP0_FPD	HP0_QSPI	0xC000_0000	512M	0xDFFF_FFFF
Excluded (1)					
/zynq_ultra_ps_e_0/SAXIGP2	S_AXI_HP0_FPD	HP0_DDR_HIGH			
/microblaze_riscv_0/Instruction (32 address bits : 4G)					
/axi_gpio_0/S_AXI	S_AXI	Reg	0x4000_0000	64K	0x4000_FFFF
/axi_iic_0/S_AXI	S_AXI	Reg	0x4080_0000	64K	0x4080_FFFF
/axi_intc_0/S_AXI	s_axi	Reg	0x4120_0000	64K	0x4120_FFFF
/axi_quad_spi_0/AXI_LITE	AXI_LITE	Reg	0x44A0_0000	64K	0x44A0_FFFF
/axi_timer_0/S_AXI	S_AXI	Reg	0x41C0_0000	64K	0x41C0_FFFF
/axi_uartlite_0/S_AXI	S_AXI	Reg	0x4060_0000	64K	0x4060_FFFF
/mailbox_0/S1_AXI	S1_AXI	S1_AXI_Reg	0x4360_0000	64K	0x4360_FFFF
/microblaze_riscv_0_local_memory/ilmb_bram_if_cn	SLMB	Mem	0x0	128K	0x1_FFFF
/zynq_ultra_ps_e_0/SAXIGP2	S_AXI_HP0_FPD	HP0_DDR_LOW	0x2000_0000	512M	0x3FFF_FFFF
/zynq_ultra_ps_e_0/SAXIGP2	S_AXI_HP0_FPD	HP0_LPS_OCM	0xFF00_0000	16M	0xFFFF_FFFF
/zynq_ultra_ps_e_0/SAXIGP2	S_AXI_HP0_FPD	HP0_QSPI	0xC000_0000	512M	0xDFFF_FFFF
Excluded (1)					
/zynq_ultra_ps_e_0/SAXIGP2	S_AXI_HP0_FPD	HP0_DDR_HIGH			
Network 1 (/zynq_ultra_ps_e_0/Data)					
/zynq_ultra_ps_e_0					
/zynq_ultra_ps_e_0/Data (40 address bits : 0x00A0000000 [256M] ,0x0400000000 [4G] ,0x1000000000 [224G])					
/mailbox_0/S0_AXI	S0_AXI	S0_AXI_Reg	0xA000_0000	64K	0xA000_FFFF

4. Constraint

Diagram | Address Editor | Address Map | Constraint.xdc

/home/logictronix06/Videos/25_26_prj/Zephyr-OpenAMP-MBlze-KR260/Constraint.xdc

```
# SPI
# PMOD #1 pin 1 (ss)
set_property PACKAGE_PIN H12 [get_ports {cs_n[0]}]
set_property IOSTANDARD LVCMOS33 [get_ports {cs_n[0]}]
# PMOD #1 pin 3 (mosi)
set_property PACKAGE_PIN E10 [get_ports mosi]
set_property IOSTANDARD LVCMOS33 [get_ports mosi]
# PMOD #1 pin 5 (miso)
set_property PACKAGE_PIN D10 [get_ports miso]
set_property IOSTANDARD LVCMOS33 [get_ports miso]
# PMOD #1 pin 7 (sclk)
set_property PACKAGE_PIN C11 [get_ports sck]
set_property IOSTANDARD LVCMOS33 [get_ports sck]

# UARTlite
# UART_txd PMOD #2 pin 2 (connect rx of the uart device to pin 2)
set_property PACKAGE_PIN H11 [get_ports UART_txd]
set_property IOSTANDARD LVCMOS33 [get_ports UART_txd]
# UART_rxd PMOD #2 pin 4 (connect tx of the uart device to pin 4)
set_property PACKAGE_PIN G10 [get_ports UART_rxd]
set_property IOSTANDARD LVCMOS33 [get_ports UART_rxd]

#I2C
# PMOD #3 pin 5
set_property PACKAGE_PIN AG10 [get_ports IIC_scl_io]
set_property IOSTANDARD LVCMOS33 [get_ports IIC_scl_io]
set_property PULLUP true [get_ports IIC_scl_io]
# PMOD #3 pin 7
set_property PACKAGE_PIN AH10 [get_ports IIC_sda_io]
set_property IOSTANDARD LVCMOS33 [get_ports IIC_sda_io]
set_property PULLUP true [get_ports IIC_sda_io]
```

```
# GPIO
# PMOD #4 pin 8 (LED7)
set_property PACKAGE_PIN AA10 [get_ports {GPIO_tri_io[7]}]
set_property IOSTANDARD LVCMOS33 [get_ports {GPIO_tri_io[7]}]
# PMOD #4 pin 6 (LED6)
set_property PACKAGE_PIN AA11 [get_ports {GPIO_tri_io[6]}]
set_property IOSTANDARD LVCMOS33 [get_ports {GPIO_tri_io[6]}]
# PMOD #4 pin 4 (LED5)
set_property PACKAGE_PIN AD10 [get_ports {GPIO_tri_io[5]}]
set_property IOSTANDARD LVCMOS33 [get_ports {GPIO_tri_io[5]}]
# PMOD #4 pin 2 (LED4)
set_property PACKAGE_PIN AD11 [get_ports {GPIO_tri_io[4]}]
set_property IOSTANDARD LVCMOS33 [get_ports {GPIO_tri_io[4]}]
# PMOD #4 pin 7 (LED3)
set_property PACKAGE_PIN AF10 [get_ports {GPIO_tri_io[3]}]
set_property IOSTANDARD LVCMOS33 [get_ports {GPIO_tri_io[3]}]
# PMOD #4 pin 5 (LED2)
set_property PACKAGE_PIN AE10 [get_ports {GPIO_tri_io[2]}]
set_property IOSTANDARD LVCMOS33 [get_ports {GPIO_tri_io[2]}]
# PMOD #4 pin 3 (LED1)
set_property PACKAGE_PIN AD12 [get_ports {GPIO_tri_io[1]}]
set_property IOSTANDARD LVCMOS33 [get_ports {GPIO_tri_io[1]}]
# PMOD #4 pin 1 (LED0)
set_property PACKAGE_PIN AC12 [get_ports {GPIO_tri_io[0]}]
set_property IOSTANDARD LVCMOS33 [get_ports {GPIO_tri_io[0]}]

# Reset button
# PMOD #2 pin 1
set_property PACKAGE_PIN J11 [get_ports ext_reset]
set_property IOSTANDARD LVCMOS33 [get_ports ext_reset]

# 25Mhz clock for KR260
set_property PACKAGE_PIN C3 [get_ports ext_clk]
set_property IOSTANDARD LVCMOS18 [get_ports ext_clk]
```

5. Now create HDL wrapper , let Vivado do the step.
6. Generate the bitstream.
7. Export hardware, including bitstream. Here you will get the XSA file.

B. Creating the SDT- device tree

One can run following command to generate the device tree-

```
eval sdtgen set_dt_param -dir zephyr -xsa zephyr_wrapper.xsa ;
sdtgen generate_sdt
```

Below is the command run and generated device tree files from SDT Generator.

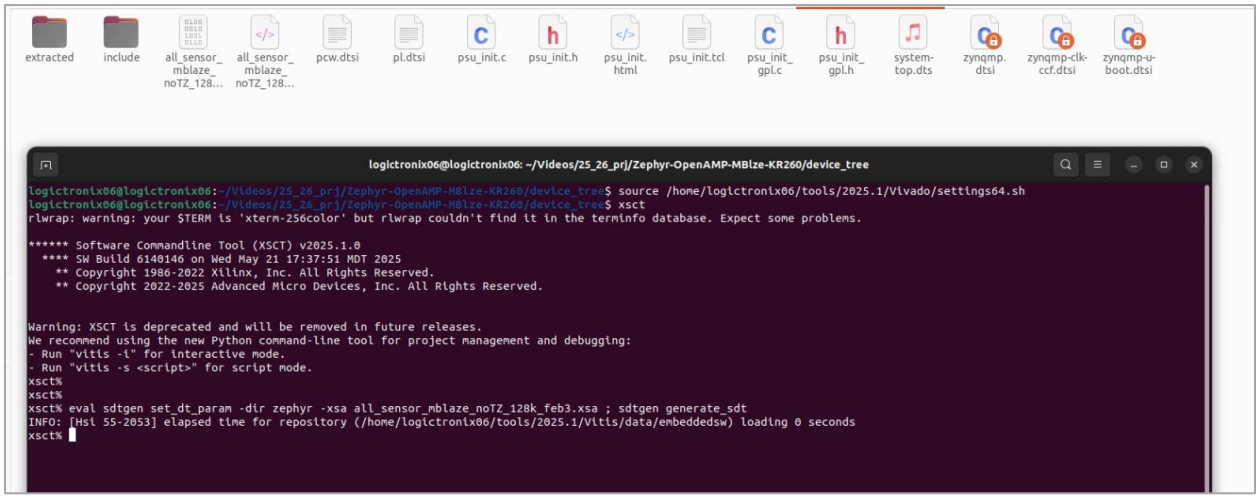

Revision History

S.N	Revision Number	Revision Details	Author
1.	v1.0	Initial Revision	Krishna Gaihre and Sanam Shakya