MicroBlaze-V-Zephyr-Kria-OpenAMP

Creating VIVADO Design and Generating the SDT

A. Creating VIVADO Design

1. VIVADO Block design

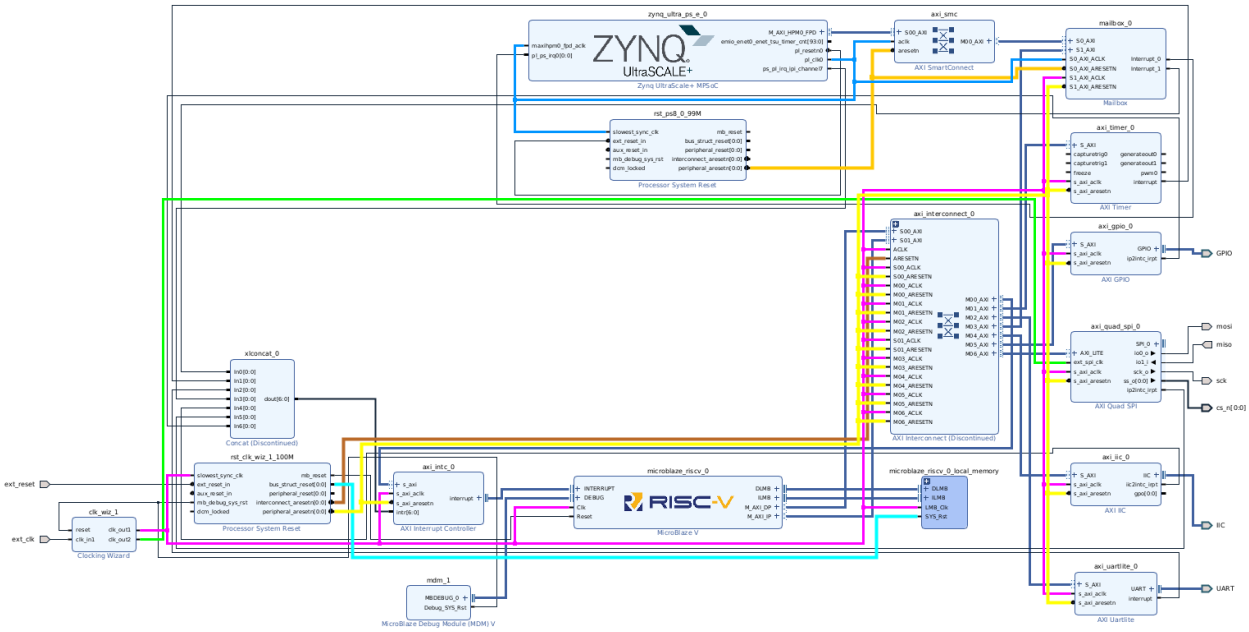

2. Microblaze IP Block Automation option

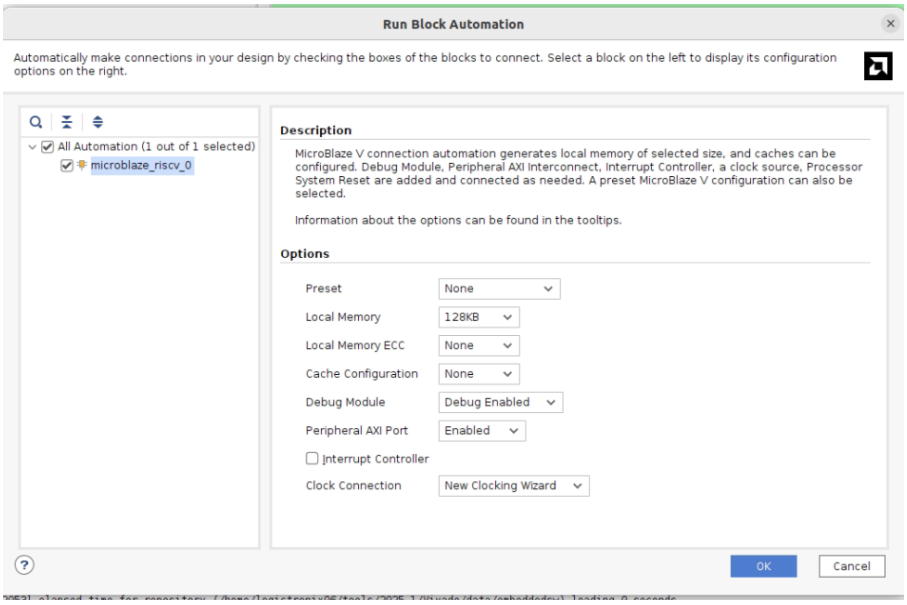

Microblaze IP Config:

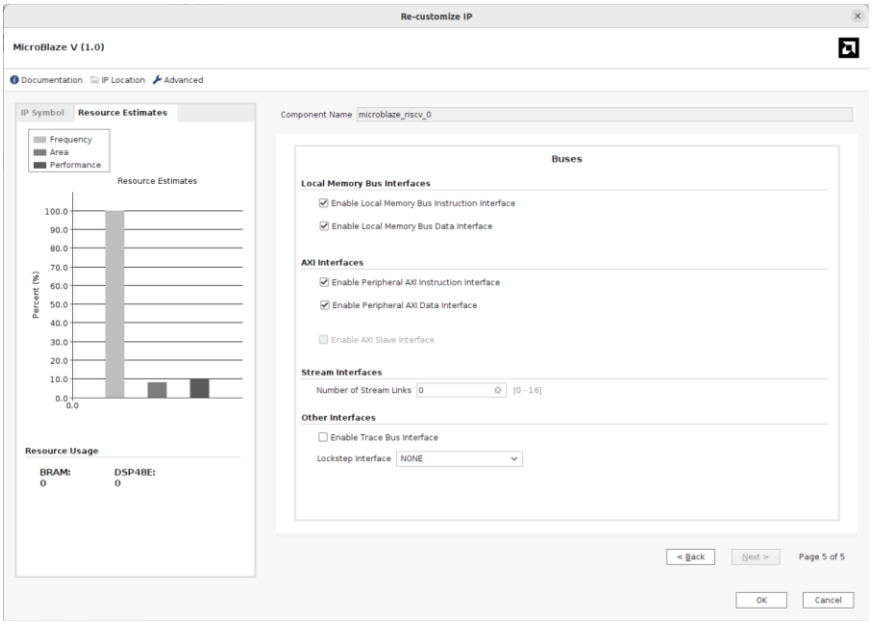

Microblaze V minimal block design with local memory and AXI interface ports enabled:

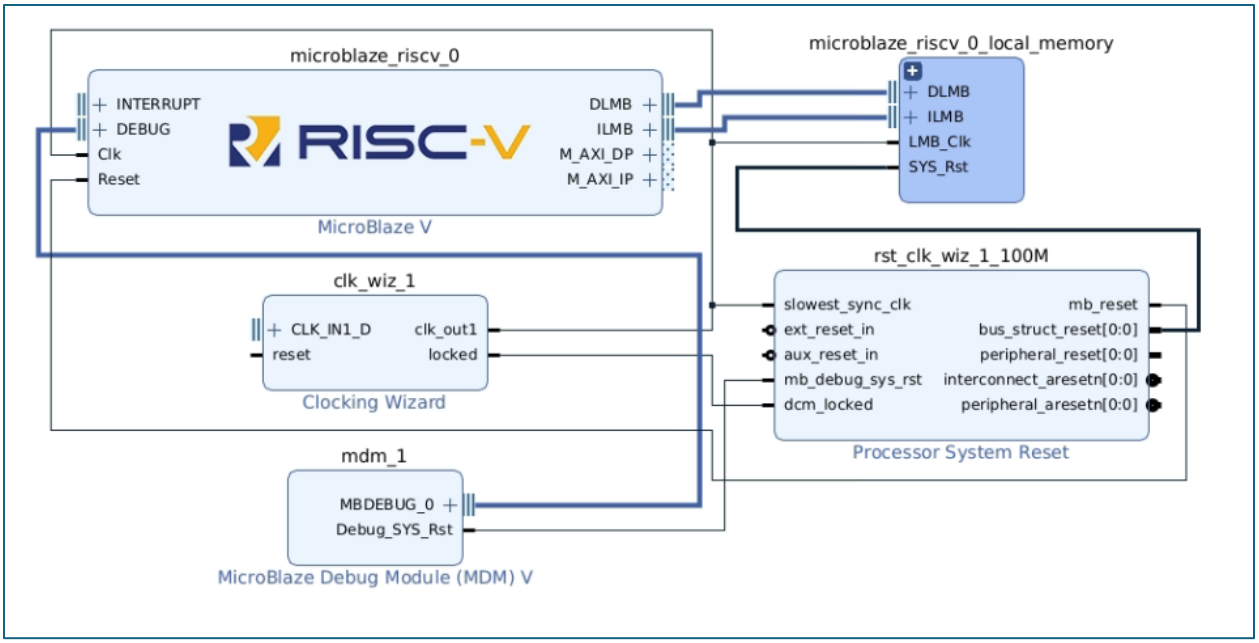

3. VIVADO Address Editor

Diagram | Address Editor | Address Map

Assigned (23) | Unassigned (0) | Excluded (2) | Hide All

Name	Interface	Slave Segment	Master Base Address	Range	Master High Address
Network 0 (/microblaze_riscv_0/Data, /microblaze_riscv_0/Instruction)					
/microblaze_riscv_0					
/microblaze_riscv_0/Data (32 address bits : 4G)					
/axi_gpio_0/S_AXI	S_AXI	Reg	0x4000_0000	64K	0x4000_FFFF
/axi_iic_0/S_AXI	S_AXI	Reg	0x4080_0000	64K	0x4080_FFFF
/axi_intc_0/S_AXI	s_axi	Reg	0x4120_0000	64K	0x4120_FFFF
/axi_quad_spi_0/AXI_LITE	AXI_LITE	Reg	0x44A0_0000	64K	0x44A0_FFFF
/axi_timer_0/S_AXI	S_AXI	Reg	0x41C0_0000	64K	0x41C0_FFFF
/axi_uartlite_0/S_AXI	S_AXI	Reg	0x4060_0000	64K	0x4060_FFFF
/mailbox_0/S1_AXI	S1_AXI	S1_AXI_Reg	0x4360_0000	64K	0x4360_FFFF
/microblaze_riscv_0_local_memory/dlmb_bram_if_cr	SLMB	Mem	0x0	128K	0x1_FFFF
/zynq_ultra_ps_e_0/SAXIGP2	S_AXI_HP0_FPD	HP0_DDR_LOW	0x2000_0000	512M	0x3FFF_FFFF
/zynq_ultra_ps_e_0/SAXIGP2	S_AXI_HP0_FPD	HP0_LPS_OCM	0xFF00_0000	16M	0xFFFF_FFFF
/zynq_ultra_ps_e_0/SAXIGP2	S_AXI_HP0_FPD	HP0_QSPI	0xC000_0000	512M	0xDFFF_FFFF
Excluded (1)					
/zynq_ultra_ps_e_0/SAXIGP2	S_AXI_HP0_FPD	HP0_DDR_HIGH			
/microblaze_riscv_0/Instruction (32 address bits : 4G)					
/axi_gpio_0/S_AXI	S_AXI	Reg	0x4000_0000	64K	0x4000_FFFF
/axi_iic_0/S_AXI	S_AXI	Reg	0x4080_0000	64K	0x4080_FFFF
/axi_intc_0/S_AXI	s_axi	Reg	0x4120_0000	64K	0x4120_FFFF
/axi_quad_spi_0/AXI_LITE	AXI_LITE	Reg	0x44A0_0000	64K	0x44A0_FFFF
/axi_timer_0/S_AXI	S_AXI	Reg	0x41C0_0000	64K	0x41C0_FFFF
/axi_uartlite_0/S_AXI	S_AXI	Reg	0x4060_0000	64K	0x4060_FFFF
/mailbox_0/S1_AXI	S1_AXI	S1_AXI_Reg	0x4360_0000	64K	0x4360_FFFF
/microblaze_riscv_0_local_memory/ilmb_bram_if_cn	SLMB	Mem	0x0	128K	0x1_FFFF
/zynq_ultra_ps_e_0/SAXIGP2	S_AXI_HP0_FPD	HP0_DDR_LOW	0x2000_0000	512M	0x3FFF_FFFF
/zynq_ultra_ps_e_0/SAXIGP2	S_AXI_HP0_FPD	HP0_LPS_OCM	0xFF00_0000	16M	0xFFFF_FFFF
/zynq_ultra_ps_e_0/SAXIGP2	S_AXI_HP0_FPD	HP0_QSPI	0xC000_0000	512M	0xDFFF_FFFF
Excluded (1)					
/zynq_ultra_ps_e_0/SAXIGP2	S_AXI_HP0_FPD	HP0_DDR_HIGH			
Network 1 (/zynq_ultra_ps_e_0/Data)					
/zynq_ultra_ps_e_0					
/zynq_ultra_ps_e_0/Data (40 address bits : 0x00A0000000 [256M] ,0x0400000000 [4G] ,0x1000000000 [224G])					
/mailbox_0/S0_AXI	S0_AXI	S0_AXI_Reg	0xA000_0000	64K	0xA000_FFFF

4. Constraint

Diagram | Address Editor | Address Map | Constraint.xdc

/home/logictronix06/Videos/25_26_prj/Zephyr-OpenAMP-MBlze-KR260/Constraint.xdc

```
# SPI
# PMOD #1 pin 1 (ss)
set_property PACKAGE_PIN H12 [get_ports {cs_n[0]}]
set_property IOSTANDARD LVCMOS33 [get_ports {cs_n[0]}]
# PMOD #1 pin 3 (mosi)
set_property PACKAGE_PIN E10 [get_ports mosi]
set_property IOSTANDARD LVCMOS33 [get_ports mosi]
# PMOD #1 pin 5 (miso)
set_property PACKAGE_PIN D10 [get_ports miso]
set_property IOSTANDARD LVCMOS33 [get_ports miso]
# PMOD #1 pin 7 (sclk)
set_property PACKAGE_PIN C11 [get_ports sck]
set_property IOSTANDARD LVCMOS33 [get_ports sck]

# UARTlite
# UART_txd PMOD #2 pin 2 (connect rx of the uart device to pin 2)
set_property PACKAGE_PIN H11 [get_ports UART_txd]
set_property IOSTANDARD LVCMOS33 [get_ports UART_txd]
# UART_rxd PMOD #2 pin 4 (connect tx of the uart device to pin 4)
set_property PACKAGE_PIN G10 [get_ports UART_rxd]
set_property IOSTANDARD LVCMOS33 [get_ports UART_rxd]

#I2C
# PMOD #3 pin 5
set_property PACKAGE_PIN AG10 [get_ports IIC_scl_io]
set_property IOSTANDARD LVCMOS33 [get_ports IIC_scl_io]
set_property PULLUP true [get_ports IIC_scl_io]
# PMOD #3 pin 7
set_property PACKAGE_PIN AH10 [get_ports IIC_sda_io]
set_property IOSTANDARD LVCMOS33 [get_ports IIC_sda_io]
set_property PULLUP true [get_ports IIC_sda_io]

# GPIO
# PMOD #4 pin 8 (LED7)
set_property PACKAGE_PIN AA10 [get_ports {GPIO_tri_io[7]}]
set_property IOSTANDARD LVCMOS33 [get_ports {GPIO_tri_io[7]}]
# PMOD #4 pin 6 (LED6)
set_property PACKAGE_PIN AA11 [get_ports {GPIO_tri_io[6]}]
set_property IOSTANDARD LVCMOS33 [get_ports {GPIO_tri_io[6]}]
# PMOD #4 pin 4 (LED5)
set_property PACKAGE_PIN AD10 [get_ports {GPIO_tri_io[5]}]
set_property IOSTANDARD LVCMOS33 [get_ports {GPIO_tri_io[5]}]
# PMOD #4 pin 2 (LED4)
set_property PACKAGE_PIN AD11 [get_ports {GPIO_tri_io[4]}]
set_property IOSTANDARD LVCMOS33 [get_ports {GPIO_tri_io[4]}]
# PMOD #4 pin 7 (LED3)
set_property PACKAGE_PIN AF10 [get_ports {GPIO_tri_io[3]}]
set_property IOSTANDARD LVCMOS33 [get_ports {GPIO_tri_io[3]}]
# PMOD #4 pin 5 (LED2)
set_property PACKAGE_PIN AE10 [get_ports {GPIO_tri_io[2]}]
set_property IOSTANDARD LVCMOS33 [get_ports {GPIO_tri_io[2]}]
# PMOD #4 pin 3 (LED1)
set_property PACKAGE_PIN AD12 [get_ports {GPIO_tri_io[1]}]
set_property IOSTANDARD LVCMOS33 [get_ports {GPIO_tri_io[1]}]
# PMOD #4 pin 1 (LED0)
set_property PACKAGE_PIN AC12 [get_ports {GPIO_tri_io[0]}]
set_property IOSTANDARD LVCMOS33 [get_ports {GPIO_tri_io[0]}]

# Reset button
# PMOD #2 pin 1
set_property PACKAGE_PIN J11 [get_ports ext_reset]
set_property IOSTANDARD LVCMOS33 [get_ports ext_reset]

# 25Mhz clock for KR260
set_property PACKAGE_PIN C3 [get_ports ext_clk]
set_property IOSTANDARD LVCMOS18 [get_ports ext_clk]
```

B. Creating the SDT- device tree

One can run following command to generate the device tree-

```
eval sdtgen set_dt_param -dir zephyr -xsa zephyr_wrapper.xsa ;
sdtgen generate_sdt
```

Below is the command run and generated device tree files from SDT Generator.

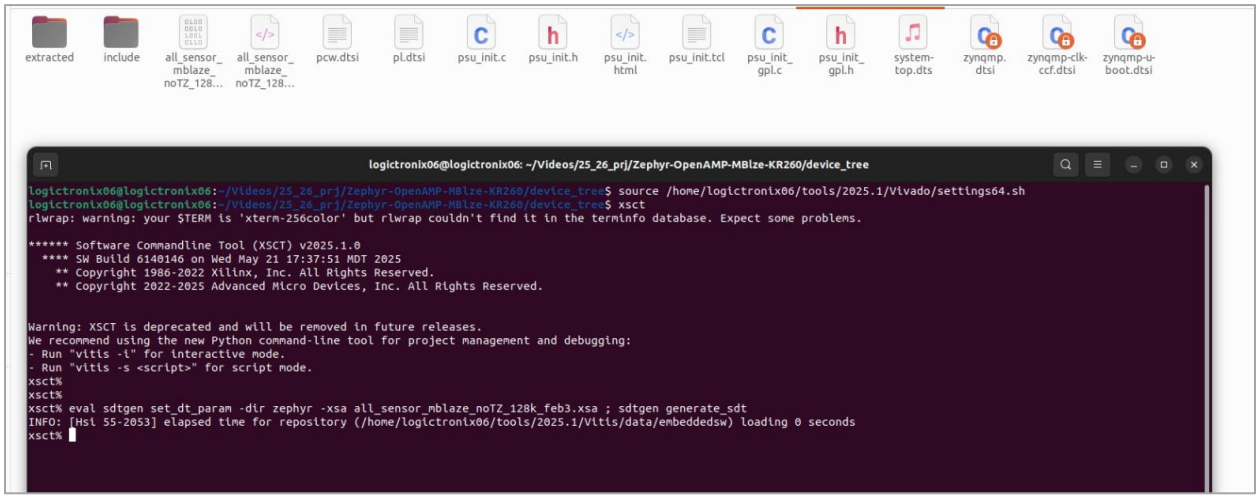

Revision History

S.N	Revision Number	Revision Details	Author
1.	v1.0	Initial Revision	Krishna Gaihre and Sanam Shakya