12V to 5V

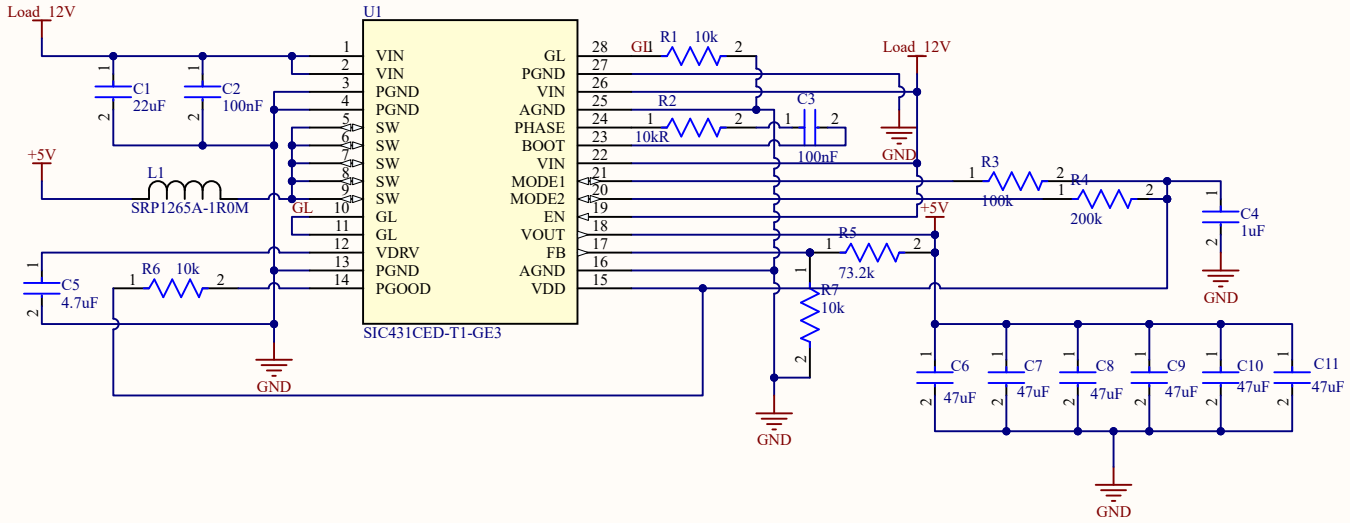

12V Buck Converter Cards

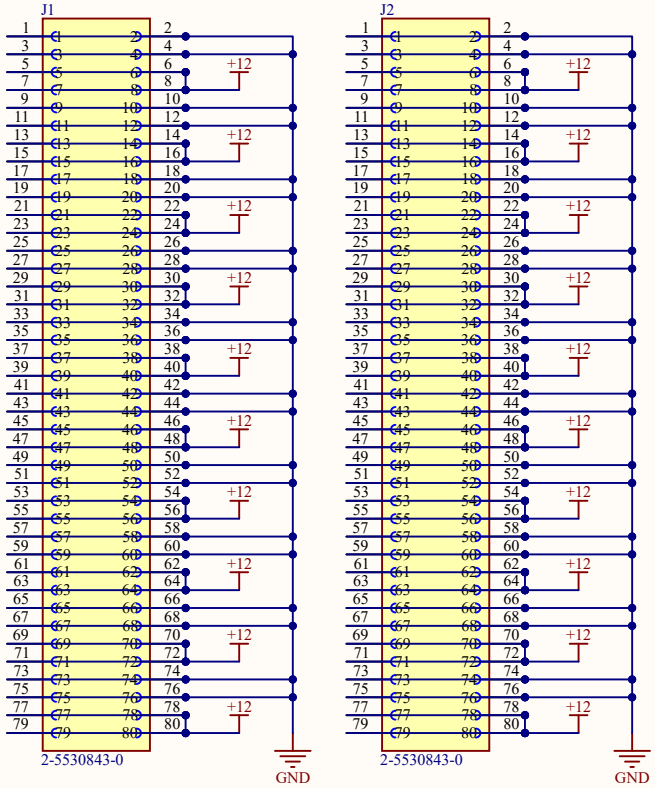

Reverse Polarity Protection

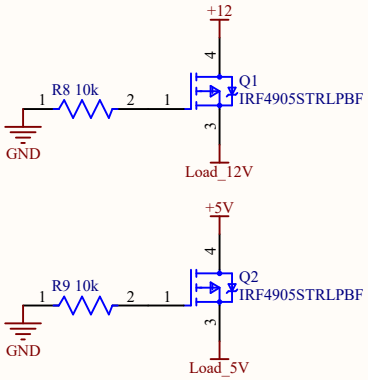

Title		
Size B	Number	Revision
Date: 4/21/2026		Sheet of
File: C:\Users\..\powah.SchDoc		Drawn By:

ESC Card Slots

Connectors for Thrusters

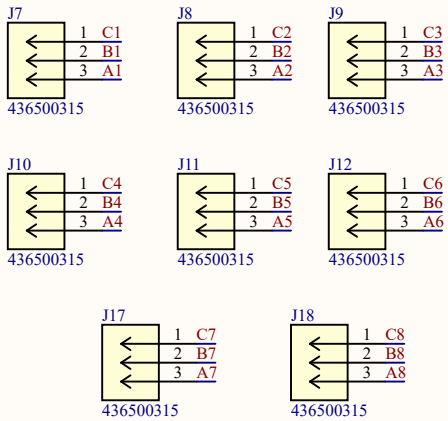

Title		
Size A	Number	Revision
Date: 4/21/2026		Sheet of
File: C:\Users\..\escs_servos.SchDoc		Drawn By:

Inertial Measurement Unit (IMU) 1

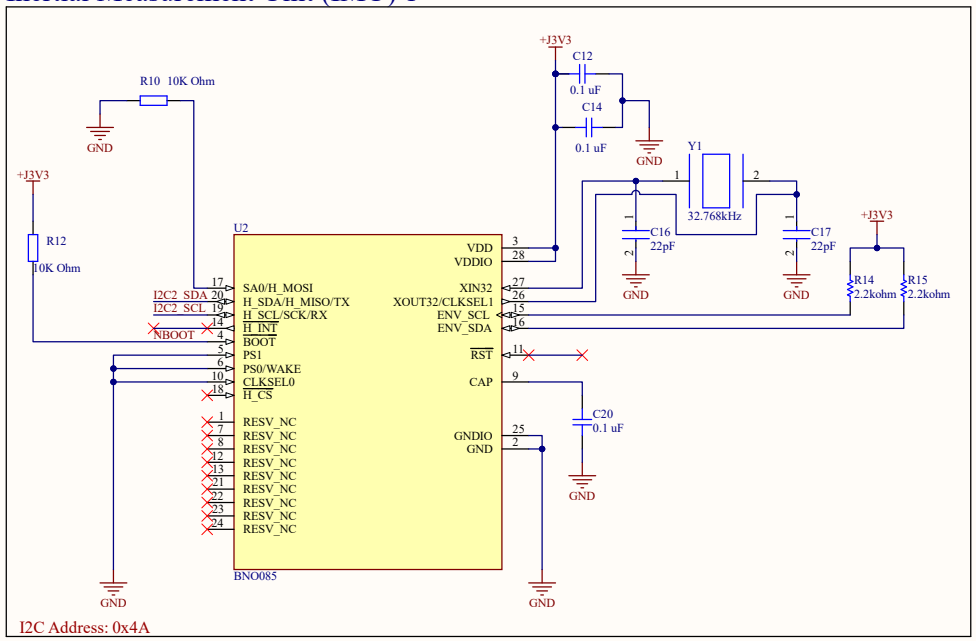

Inertial Measurement Unit (IMU) 2

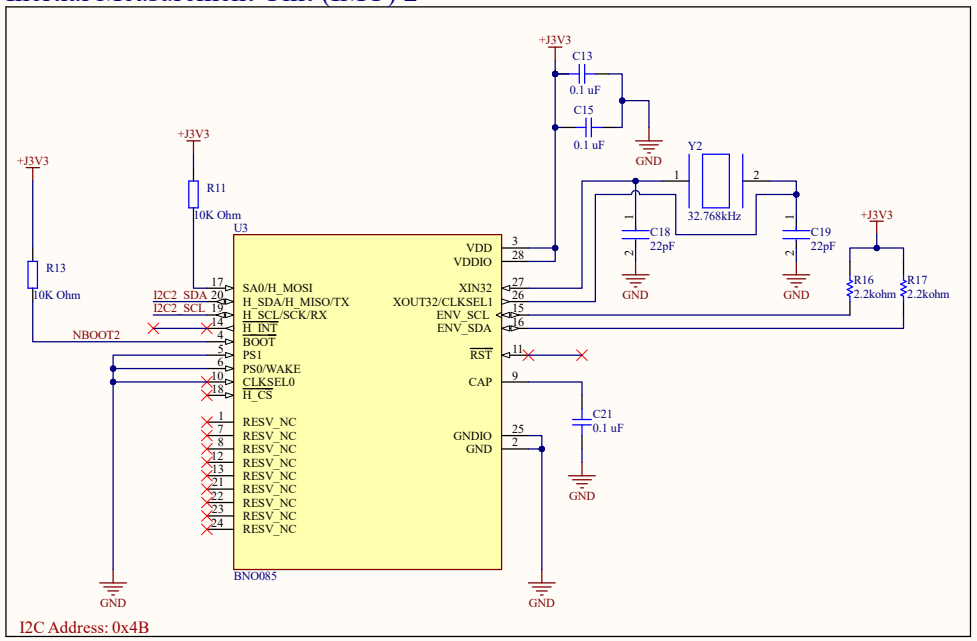

12V Rail Sensor

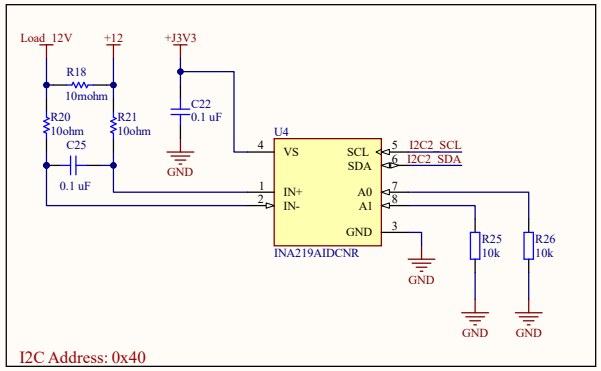

5V Rail Sensor

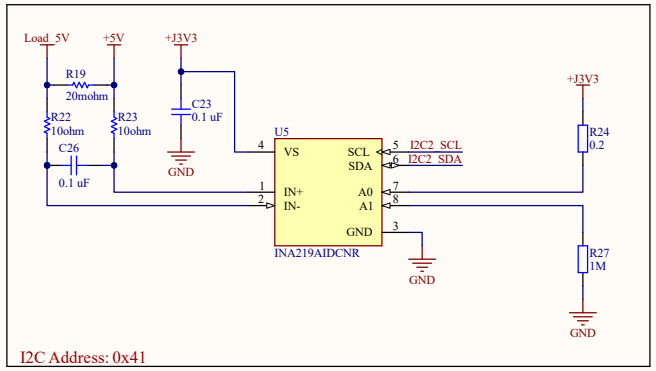

Depth Sensor

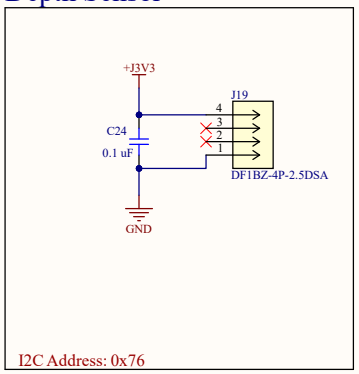

Leak Sensor

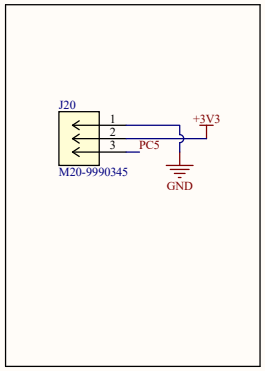

Title		
Sensor Interface Integration		
Size: A	Number: 1B2026	Revision: REV.A
Date: 4/21/2026	Sheet of	
File: C:\Users\..\Sensor_Interface_Integration.SchDoc	Drawn By:	

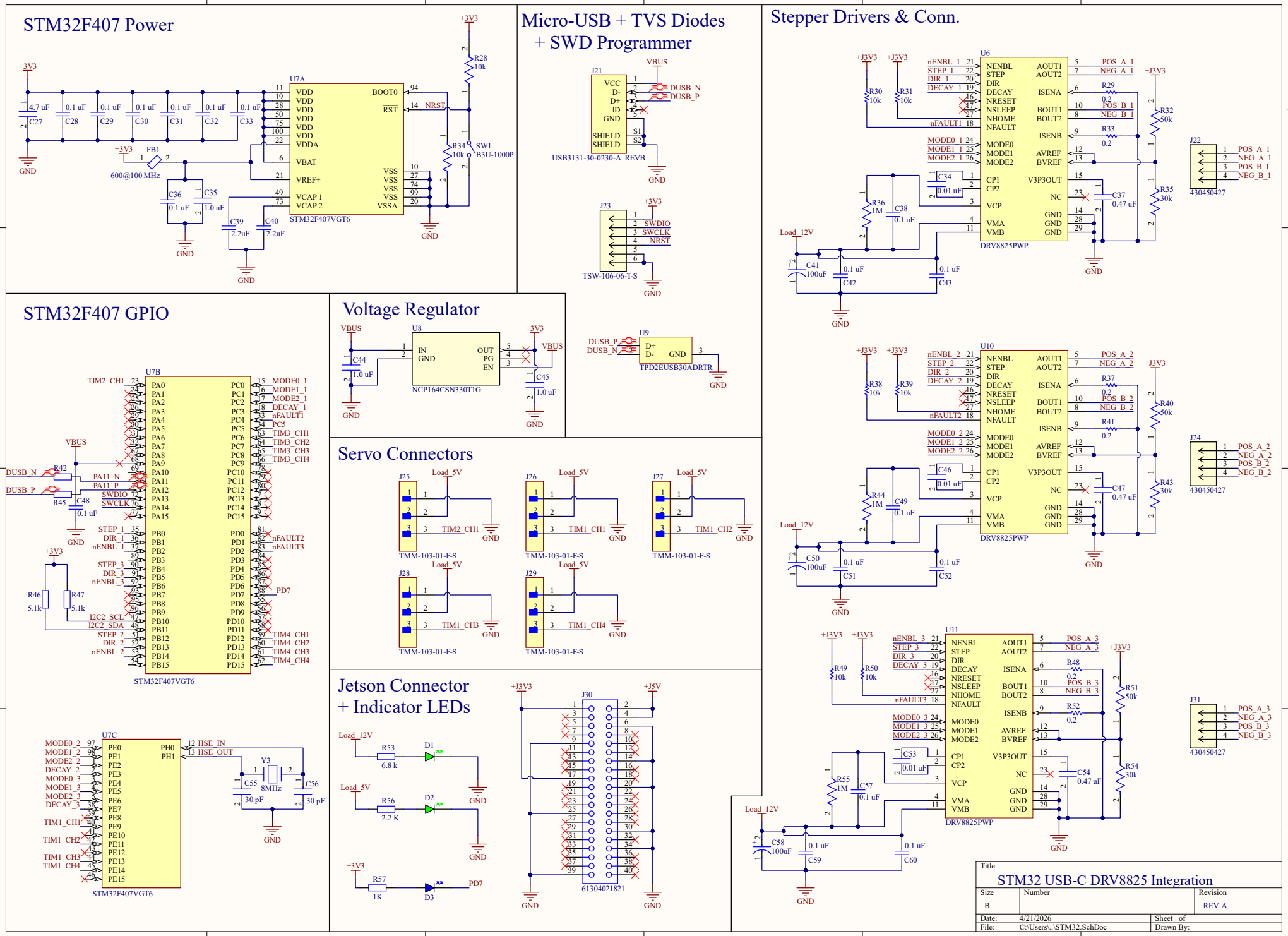
STM32F407 Power
U7A
STM32F407VGT6
+3V3
GND
VDD
VDDA
VBAT
VREF+
VCAP 1
VCAP 2
BOOT0
RST
VSS
VSSA
NRST
R28 10k
R34 10k
SW1 B3U-1000P
FB1 600@100 MHz
C27 4.7 uF
C28 0.1 uF
C29 0.1 uF
C30 0.1 uF
C31 0.1 uF
C32 0.1 uF
C33 0.1 uF
C35 1.0 uF
C36 0.1 uF
C39 2.2uF
C40 2.2uF
Micro-USB + TVS Diodes
+ SWD Programmer
J21
USB3131-30-0230-A_REVB
VBUS
VCC
D-
D+
ID
GND
SHIELD
DUSB_N
DUSB_P
J23
TSW-106-06-T-S
SWDIO
SWCLK
NRST
U9
TPD2EUSB30ADRTR
Stepper Drivers & Conn.
U6
U10
U11
DRV8825PWP
NENBL
STEP
DIR
DECAY
NRESET
NSLEEP
NHOME
NFAULT
MODE0
MODE1
MODE2
CP1
CP2
VCP
VMA
VMB
AOUT1
AOUT2
ISENA
BOUT1
BOUT2
ISENB
AVREF
BVREF
V3P3OUT
NC
POS_A_1
NEG_A_1
POS_B_1
NEG_B_1
POS_A_2
NEG_A_2
POS_B_2
NEG_B_2
POS_A_3
NEG_A_3
POS_B_3
NEG_B_3
J22
J24
J31
430450427
Load_12V
R29 0.2
R33 0.2
R37 0.2
R41 0.2
R48 0.2
R52 0.2
R32 50k
R35 30k
R40 50k
R43 30k
R51 50k
R54 30k
C37 0.47 uF
C47 0.47 uF
C54 0.47 uF
C41 100uF
C50 100uF
C58 100uF
STM32F407 GPIO
U7B
STM32F407VGT6
TIM2_CH1
MODE0_1
MODE1_1
MODE2_1
DECAY_1
nFAULT1
PC5
TIM3_CH1
TIM3_CH2
TIM3_CH3
TIM3_CH4
PA11_N
PA11_P
SWDIO
SWCLK
STEP_1
DIR_1
nENBL_1
nFAULT2
nFAULT3
STEP_3
DIR_3
nENBL_3
PD7
I2C2_SCL
I2C2_SDA
STEP_2
DIR_2
nENBL_2
TIM4_CH1
TIM4_CH2
TIM4_CH3
TIM4_CH4
DUSB_N
DUSB_P
R42
R45
C48 0.1 uF
R46 5.1k
R47 5.1k
U7C
MODE0_2
MODE1_2
MODE2_2
DECAY_2
MODE0_3
MODE1_3
MODE2_3
DECAY_3
TIM1_CH1
TIM1_CH2
TIM1_CH3
TIM1_CH4
HSE_IN
HSE_OUT
Y3 8MHz
C55 30 pF
C56 30 pF
Voltage Regulator
U8
NCP164CSN330T1G
IN
GND
OUT
PG
EN
C44 1.0 uF
C45 1.0 uF
Servo Connectors
J25
J26
J27
J28
J29
TMM-103-01-F-S
TIM2_CH1
TIM1_CH1
TIM1_CH2
TIM1_CH3
TIM1_CH4
Jetson Connector
+ Indicator LEDs
Load_12V
Load_5V
R53 6.8 k
R56 2.2 K
R57 1K
D1
D2
D3
PD7
J30
+J5V
61304021821
Title
STM32 USB-C DRV8825 Integration
Size
B
Number
Revision
REV. A
Date: 4/21/2026
Sheet of
File: C:\Users\..\STM32.SchDoc
Drawn By: