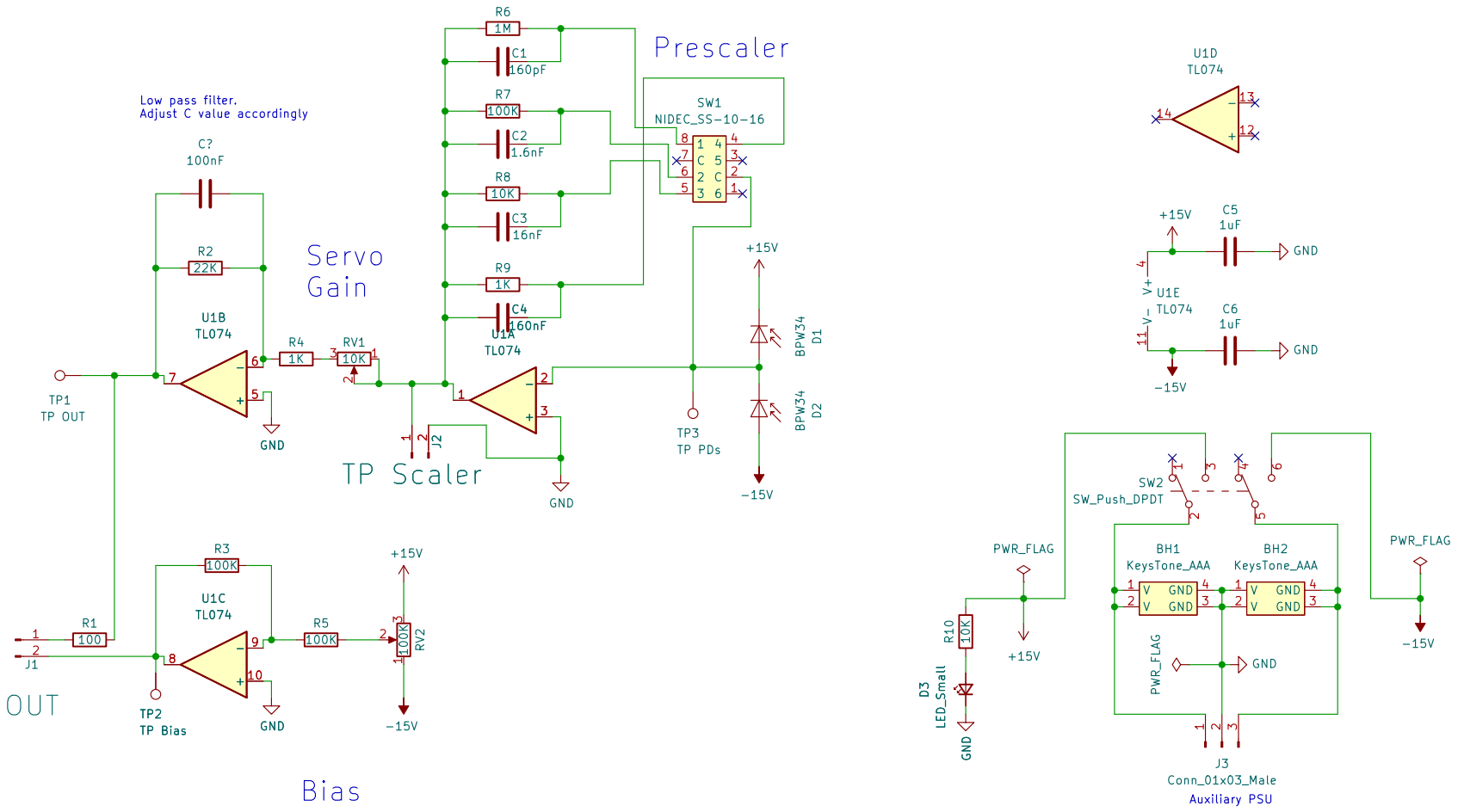

©Loic74650

Sheet: /
File: FringeLocker.kicad_sch

Title: Fringer Locker

Size: A4	Date: 2023-02-10	**Rev: V1.0**
KiCad E.D.A. kicad (6.0.11)		Id: 1/1