Arduino Relay Shield
driving 3 solenoids with reversing polarity capability

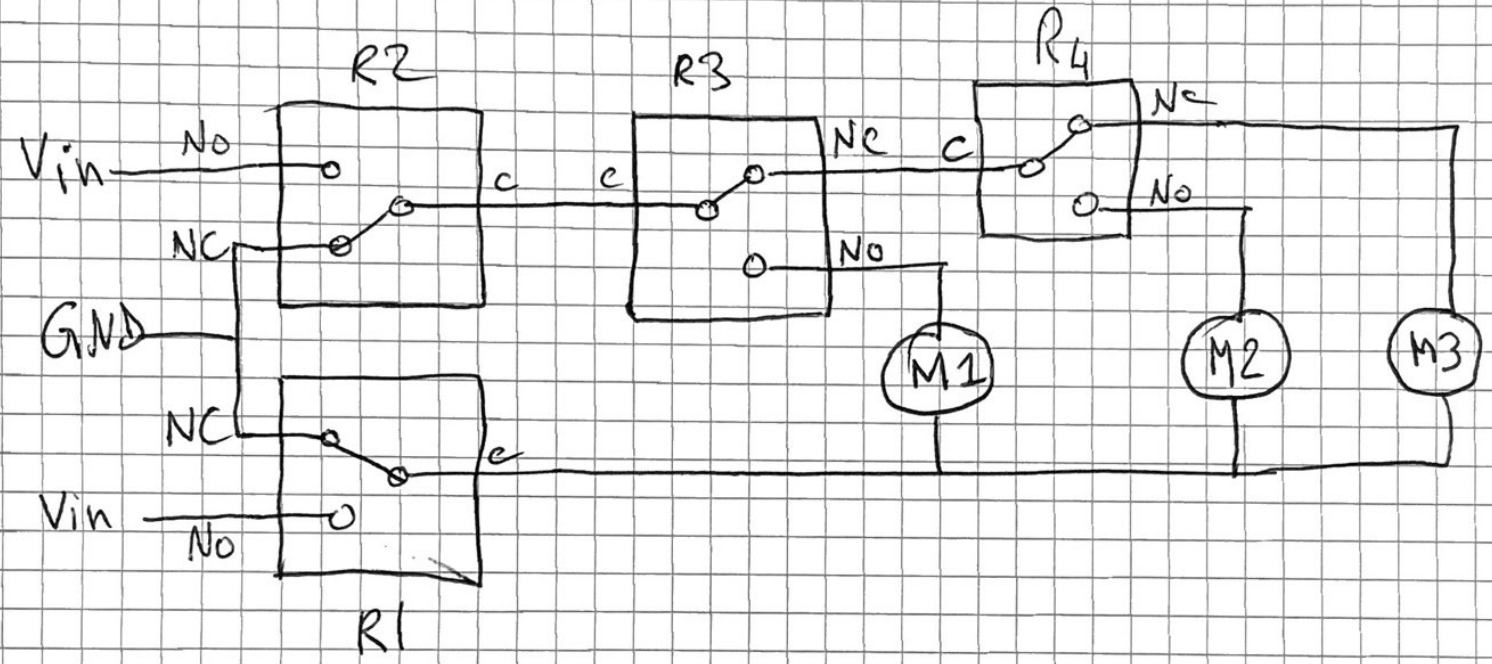

Motor Selection

	R_3	R_4
M_1	H	—
M_2	L	H
M_3	L	L

Motor Actuation

	↻	↺
R_1	H	L
R_2	L	H