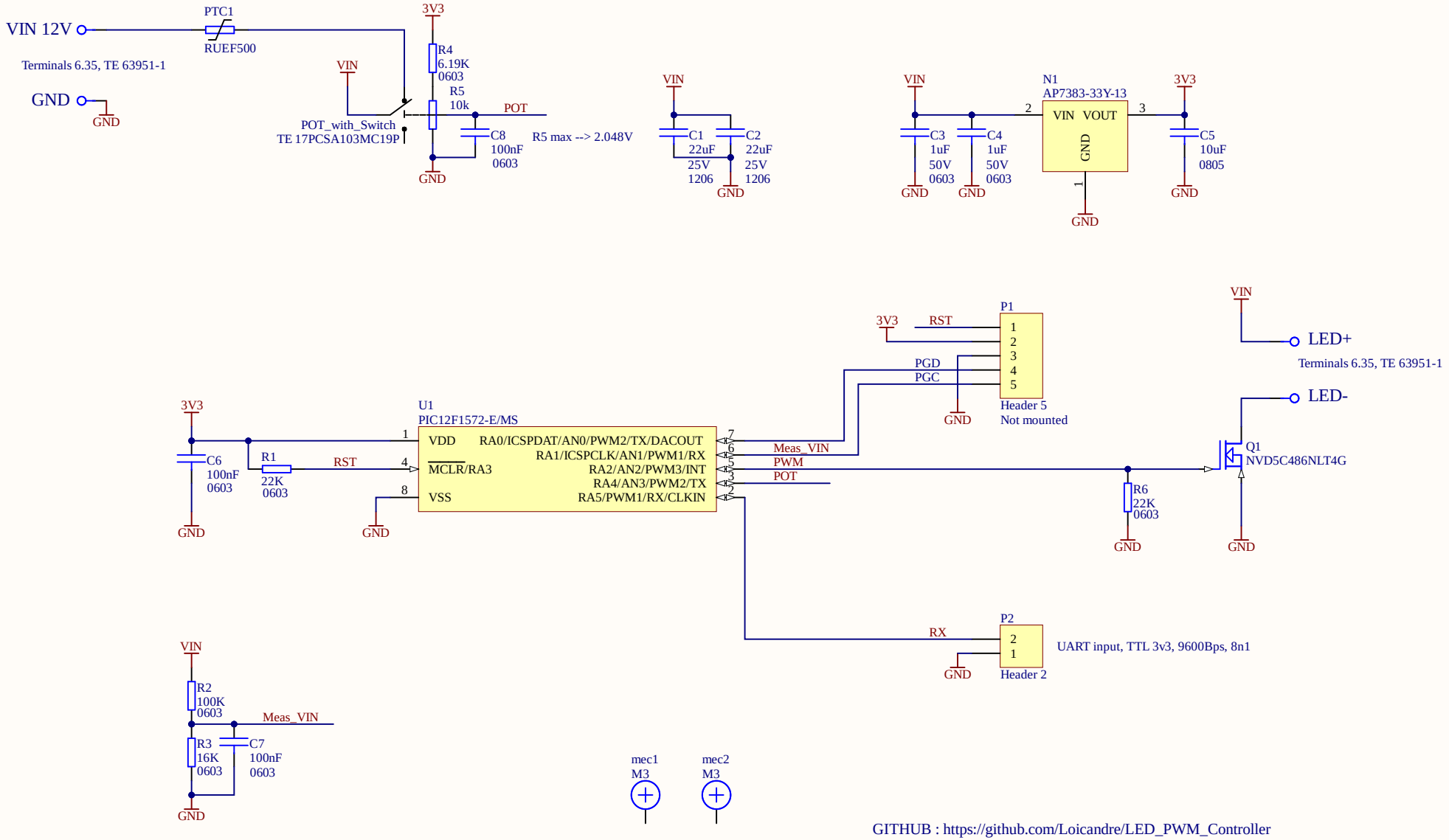

GITHUB : https://github.com/Loicandre/LED_PWM_Controller

Title	***LED_PWM_Controller***		
Size: A4	Number: 1	Revision: V1.0	
Date: 09.10.2020	Time: 18:19:33	Sheet 1 of 1	
File: Z:\Loic\Electro\Projet\Altium\BUS_PWM_controller\BUS_PWM_controller.SchDoc			