BIURKO_STANDARD

PRODUCTION DATE	PACKING CODE

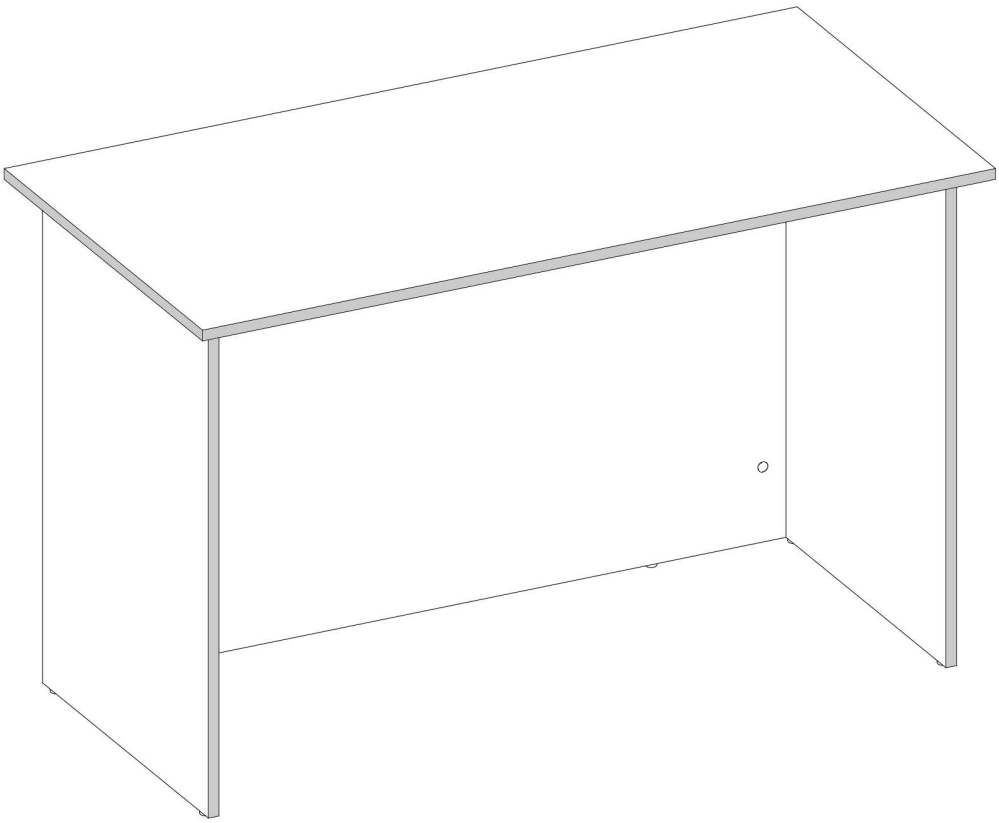

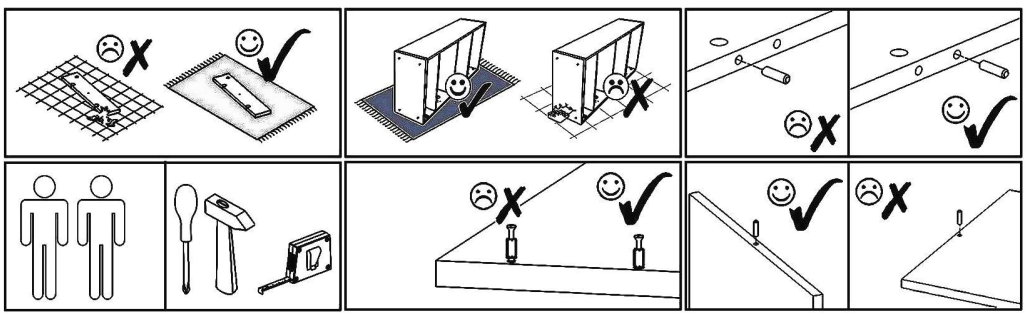

M1	N2	E2	T1	B1
12x15mm x10	L=45mm x10	8x35mm x10	x6	B ø17/4mm x10

IM241015

BIURKO_STANDARD

PRODUCTION DATE	PACKING CODE

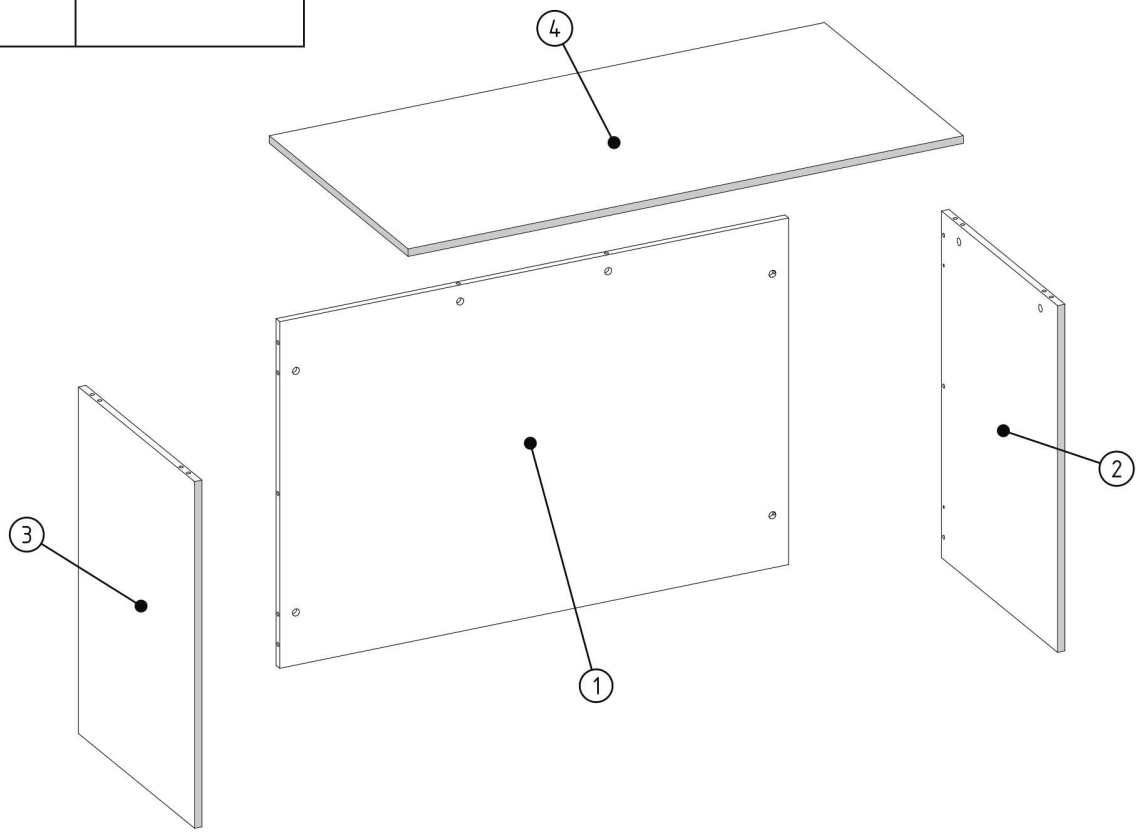

000247	4	1
000176	3	1
000177	2	1
000235	1	1
ID	NUMBER	QUANTITY

M1	E2	T1
12x15mm x6	8x35mm x6	x2

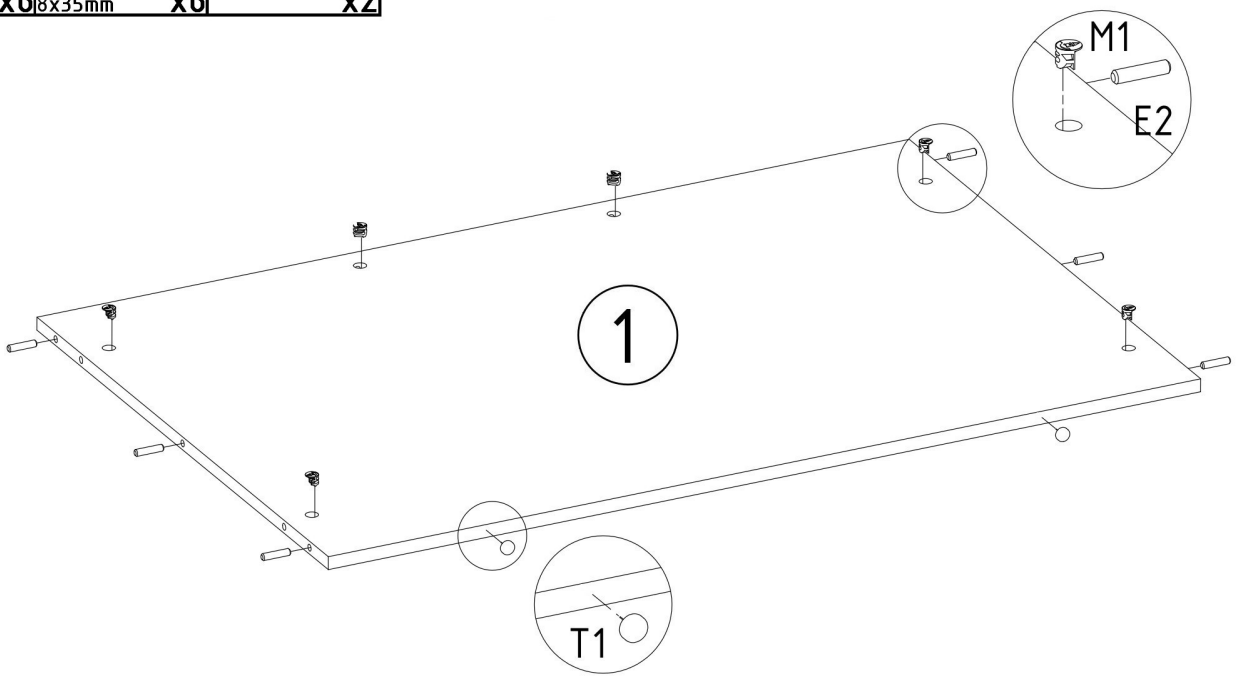

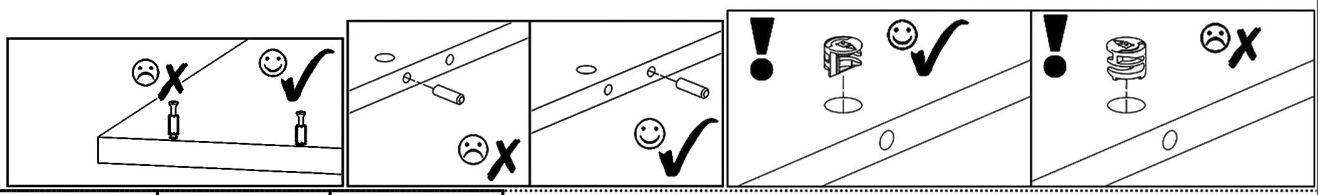

M1	N2	E2	T1
12x15mm x2	L=45mm x2	8x35mm x2	x2

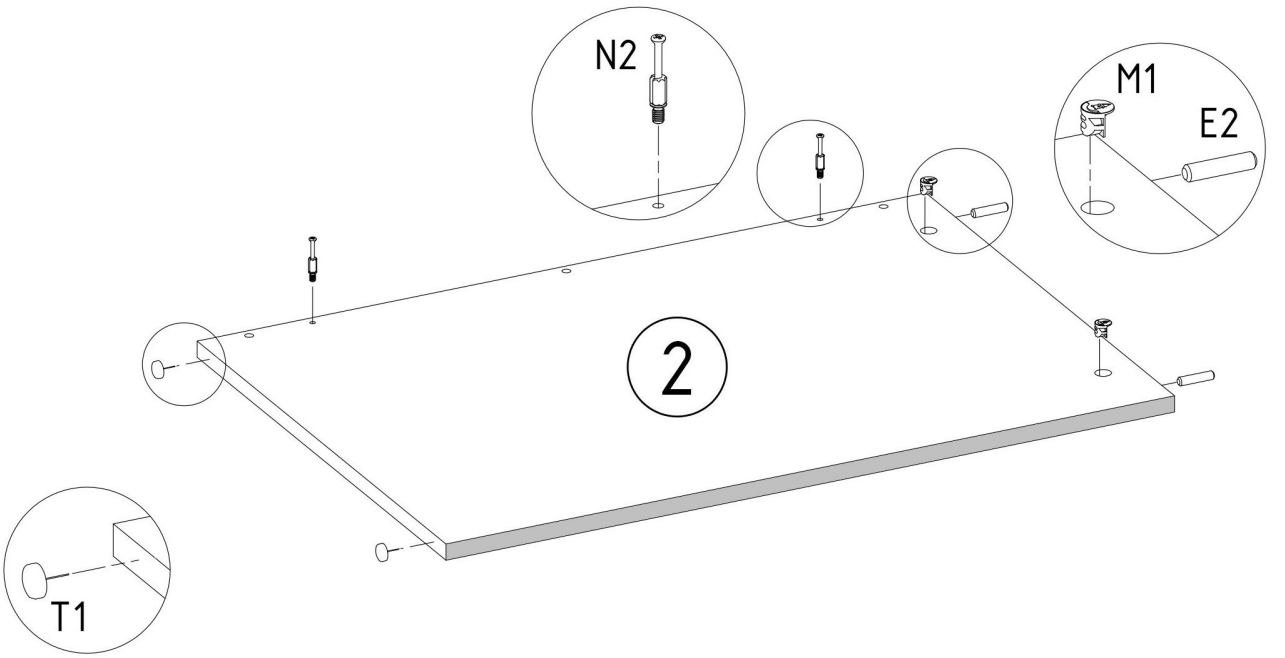

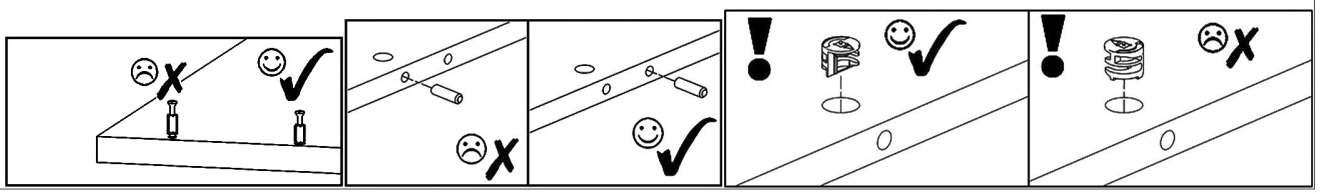

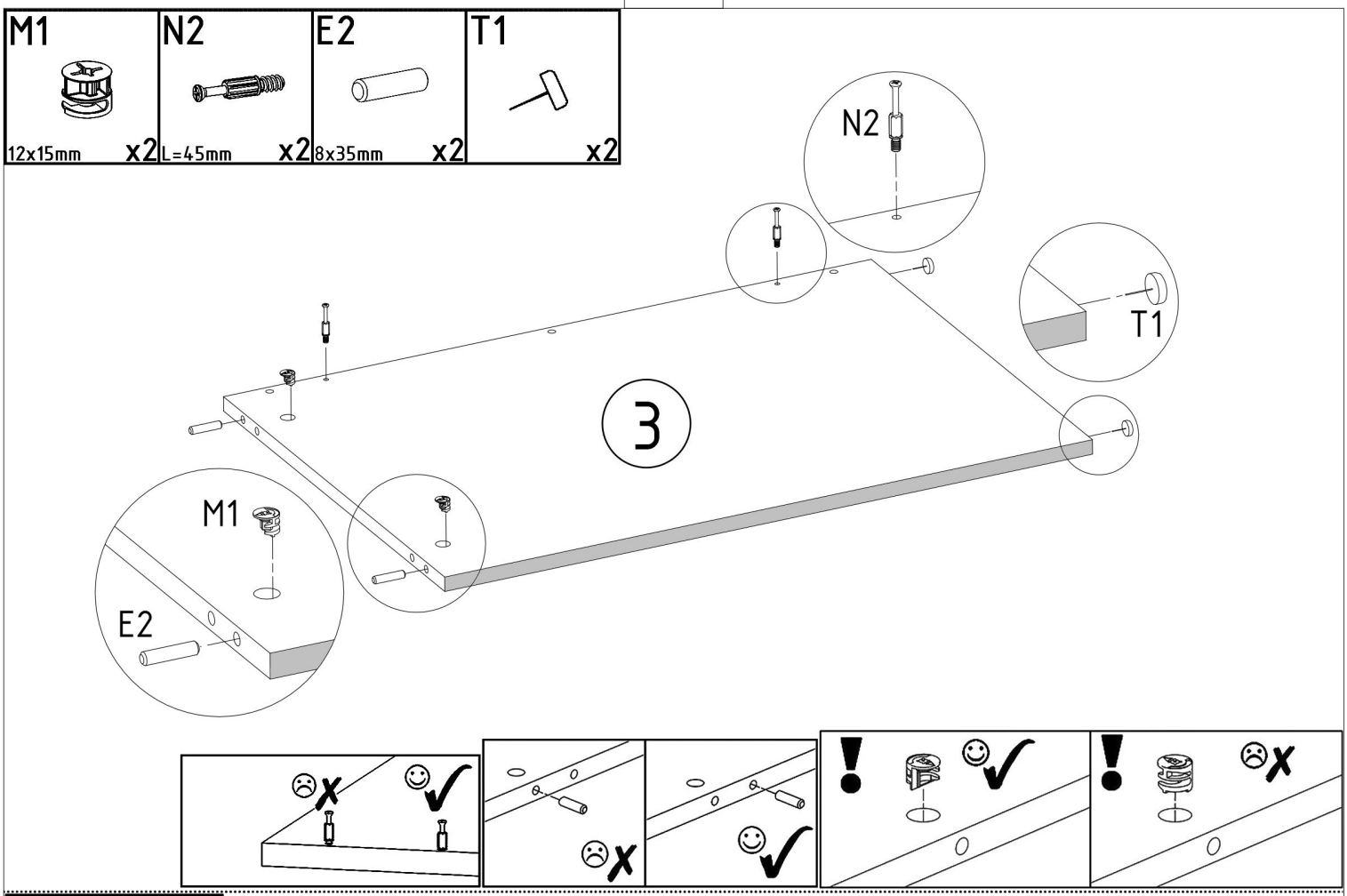
M1
12x15mm
x2
N2
L=45mm
x2
E2
8x35mm
x2
T1
x2
N2
T1
3
M1
E2

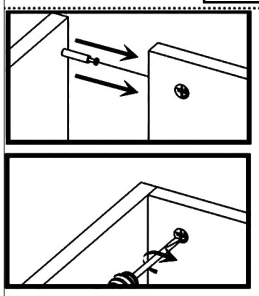

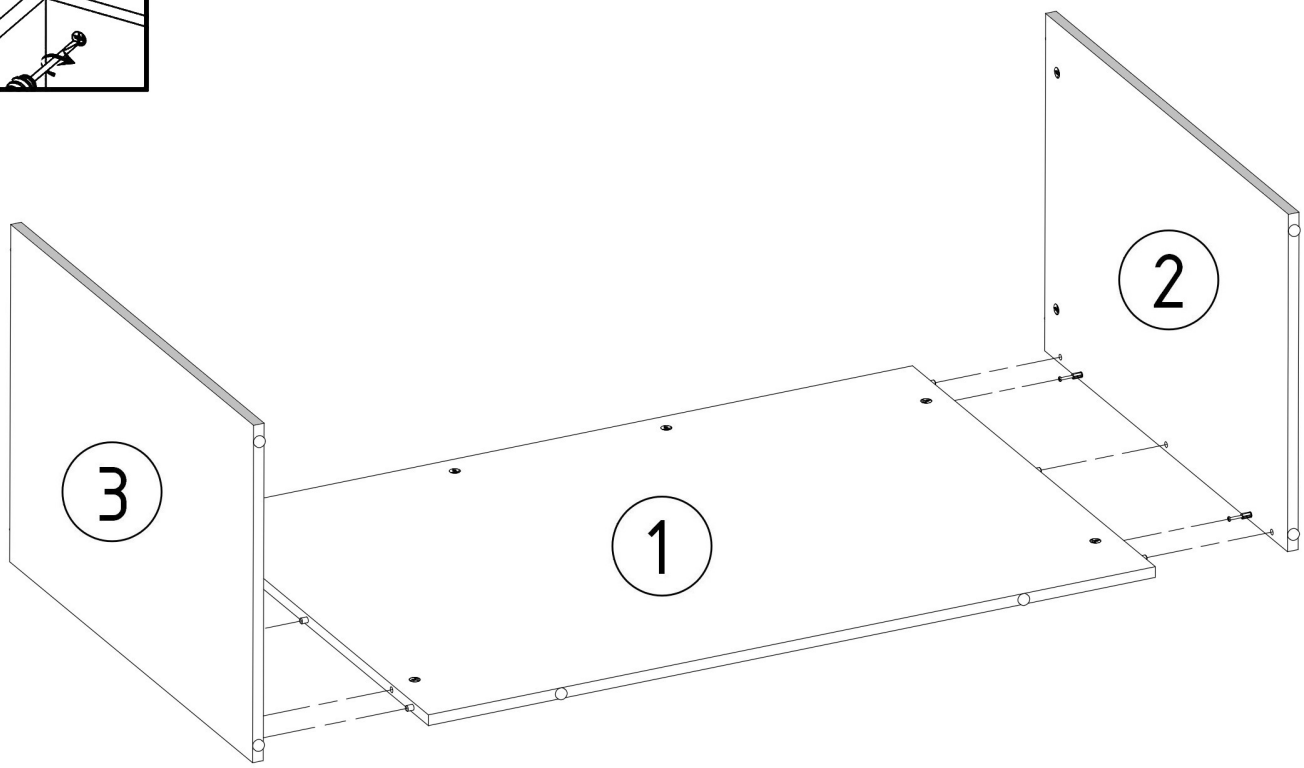
2
3
1

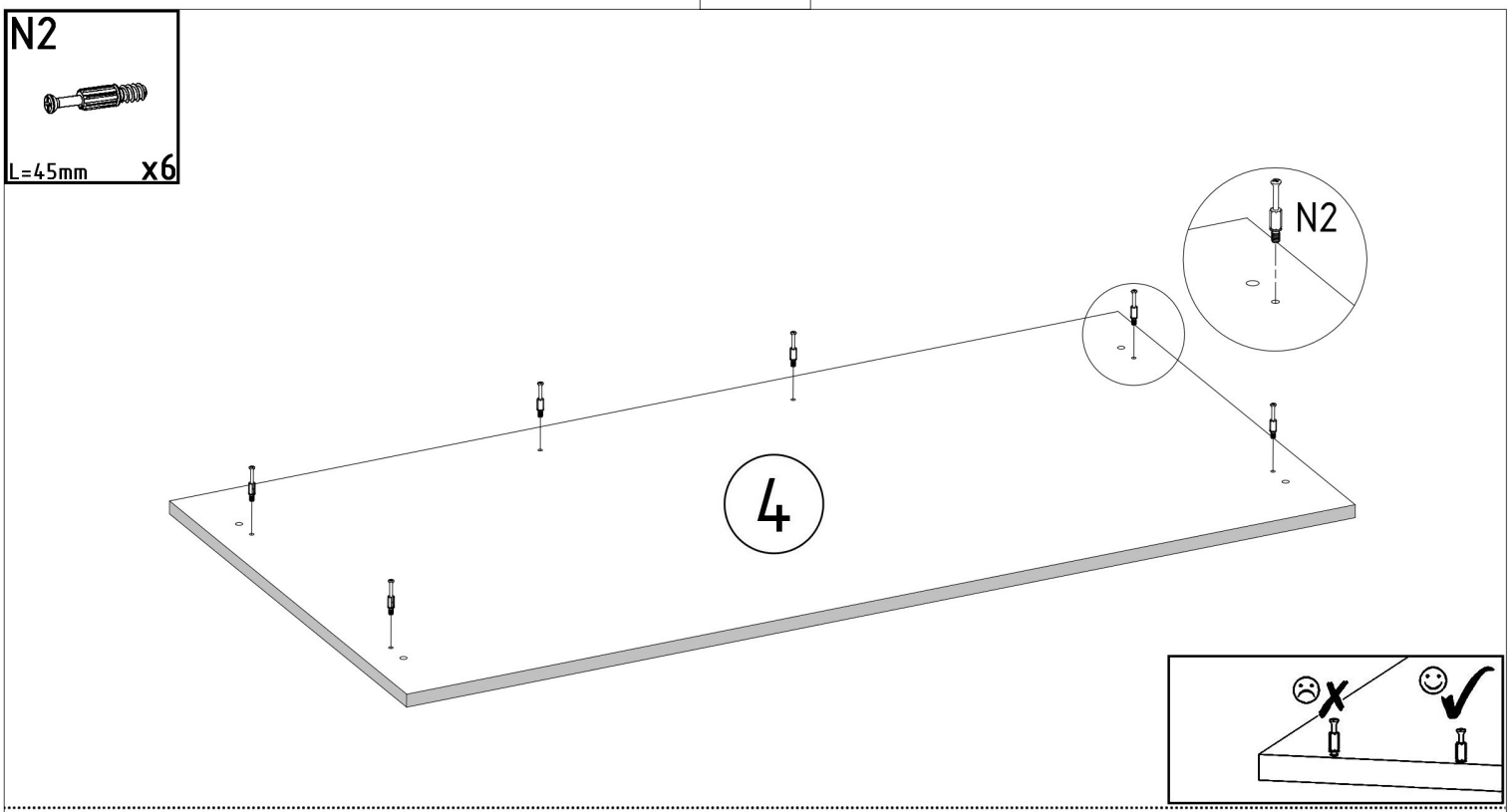
N2
L=45mm
x6
N2
4

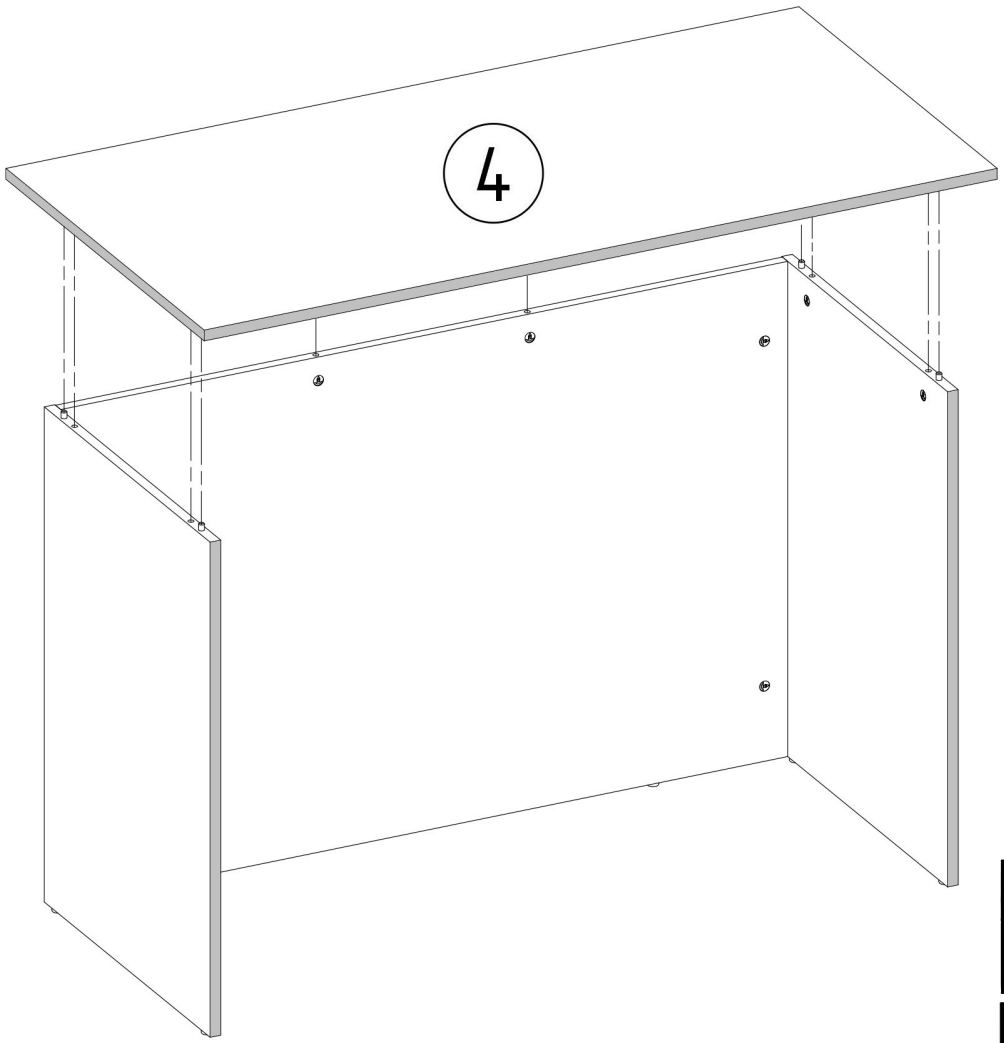
4

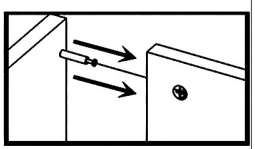

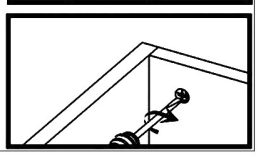

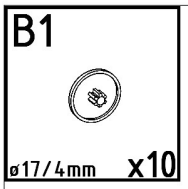
B1
ø17/4mm
x10

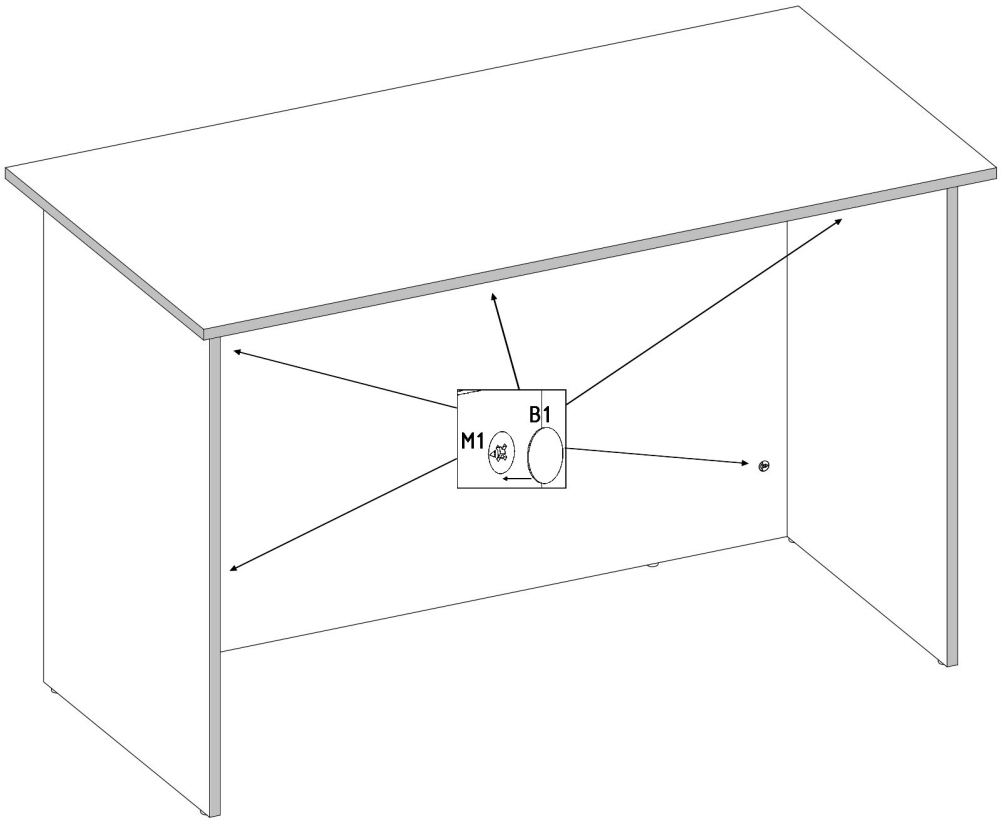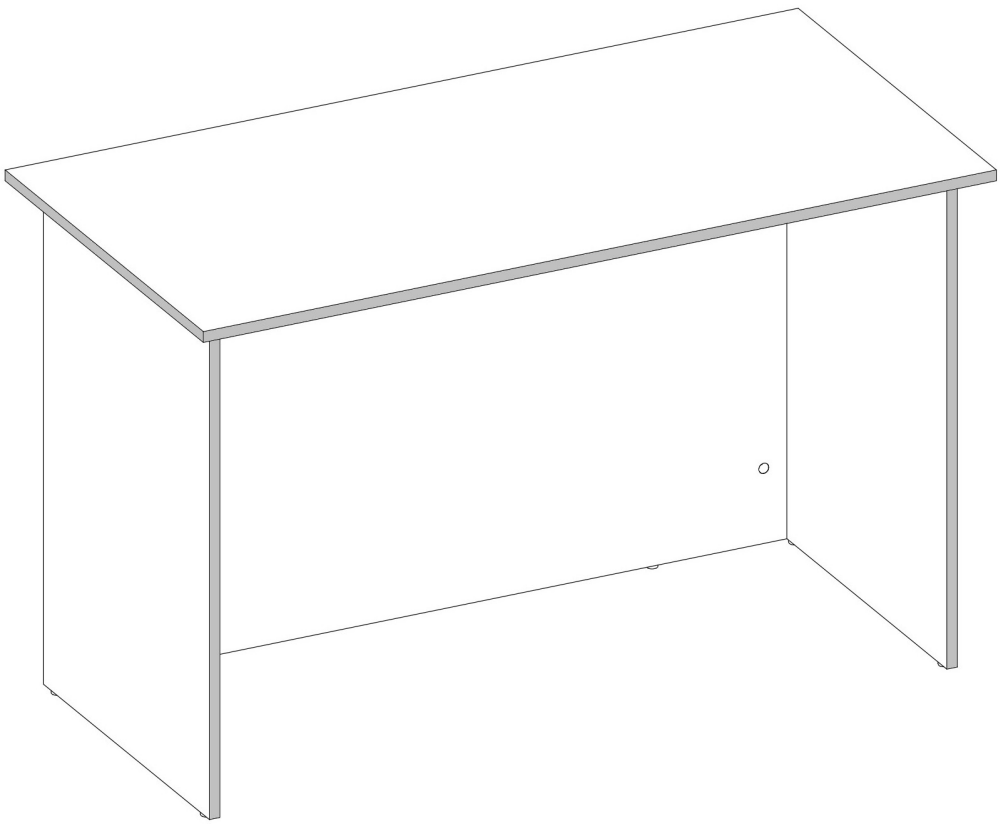
B1
M1