PREFACE TO THE FIRST EDITION

Estimate has always been regarded as a valuation based on opinion or roughly made from imperfect or incomplete data; a calculation not professedly exact; an appraisement; also a statement, as by a builder, in regard to the cost of certain work.

This book is intended for the last definition. As the science of technology advances and the demand for technologists increases educators, architects, engineers, contractors, carpenters, and other workers in allied fields are becoming more cognizant of the importance and value of near accuracy even in estimates. It is at this juncture that the author, in his desire to be of some help, prepared this edition as an introductory text to facilitate the studies of beginning students and other interested persons who wish an instant answer to their problems involving cost of construction materials. This book is, by design, an outline whose purpose is to guide those persons concerned on matters of estimation. Tables and formula have been prepared with the hope that readers or users of the book will find it easy to formulate solutions to their cost problems. Illustrative examples were included to serve as visual aids for more perplexing problems.

Since this is an initial attempt on the part of the author along this line of endeavor, he does not claim that this work is in itself perfect. In fact he would welcome suggestions, from those who are better knowledgeable that may further enrich the contents of this book.

For the present edition, the author wishes to express grateful acknowledgement for the valuable suggestions of Dean Francisa Guevara of UNEP, Iriga City and Edgar Tuy who read the preliminary of the entire manuscript. The author likewise, wishes to express his indebtedness to the countless persons here unnamed, who have contributed to the scientific and experiential background from which this book has been based.

- M.B.F

TABLE OF CONTENTS

CHAPTER 1 CONCRETE	Page
1-1 Plain Concrete	1
1-2 The Principles of Concrete Mixing	3
1-3 Unit of Measure	4
1-4 Concrete Proportion	8
1-5 Concrete Slab	10
1-6 Estimating by the Area Method	13
1-7 Concrete Column	14
1-8 Estimating by the Linear Meter Method	16
1-9 Post and Footing	19
1-10 Rectangular Column	23
1-11 Rectangular Beam and Girder	24
1-12 Circular Column	25
1-13 Concrete Pipes	28
CHAPTER 2 MASONRY	
2-1 Concrete Hollow Blocks	31
2-2 Comparative Cost Analysis Between a Reinforced Concrete Wall and a Concrete Hollow Block Wall	46
2-3 Special Type of Concrete Hollow Blocks	53
2-4 Adobe Stone	55
2-5 Decorative Concrete Blocks	60
CHAPTER 3 METAL REINFORCEMENT	
3-1 Steel Reinforcement	63
3-2 Identification of Steel Bars	65
3-3 Bar Splice, Hook and Bend	65
3-4 Concrete Hollow Blocks Reinforcement	70
3-5 Tie Wire for Steel Reinforcement	74
3-6 Independent Footing Reinforcement	75
3-7 Post and Column Reinforcement	81

3-8 Beams and Girders Reinforcement 82
3-9 Lateral Ties 83
3-10 Stirrups for Beams and Girders 94
3-11 Spiral and Column Ties 96
3-12 One Way Reinforced Concrete Slab 99
3-13 Two Way Reinforced Concrete Slab 102
3-14 Concrete Pipe Reinforcement 105

CHAPTER 4 LUMBER

4-1 Wood 107
4-2 Definition of Terms 107
4-3 Classification of Wood 108
4-4 Methods of Sawing the Log 110
4-5 Defects in Wood 112
4-6 Seasoning of Lumber 112
4-7 Unit of Measure of Lumber 114
4-8 Wood Post 117
4-9 Girder 119
4-10 Floor Joist and T & G Flooring 122
4-11 Siding Wood Board 126
4-12 Girts, Rafters, Truss, Purlins and Fascia Board 129
4-13 Studs 130
4-14 Ceiling Joist 134
4-15 Ceiling Board 136
4-16 Door Frame 140
4-17 Window Frame 143

CHAPTER 5 FORMS, SCAFFOLDING AND STAGING

5-1 Form 145
5-2 Greasing of Forms 147
5-3 Scaffolding and Staging 147
5-4 Comparative Analysis Between the T & G and Plywood as Forms 149
5-5 Forms Using Plywood 156
5-6 Forms of Circular Column 158
5-7 Estimating the Scaffolding and Staging 165

CHAPTER 6 ROOFING MATERIALS

6-1	Galvanized Iron Sheet	171
6-2	Asbestos Roofing	192
6-3	Colorbond Klip-Lok	198
6-4	Banawe Horizontal Metal Tile	199
6-5	Marcelo Roofing System	200
6-6	Colorbond Custom ORB	201
6-7	Milano Longspan Stell Bricks	202
6-8	Colorbond Trimdek Hi-Ten	202

CHAPTER 7 TILEWORK

7-1	Ceramic Tiles	205
7-2	Terrazo and Granolithic	211
7-3	Cement Tiles	214
7-4	Vinyl and Rubber Tiles	217

CHAPTER 8 HARDWARE

8-1	Bolts	219
8-2	Screw	226
8-3	Nails	229

CHAPTER 9 STAIRCASE

9-1	Definition of Terms	237
9-2	Laying Out of Stairs	242
9-3	Stringers	248

CHAPTER 10 PAINTING

10-1	Paint	253
10-2	Paint Failure	256
10-3	Surface Preparation	257
10-4	Kinds of Paints, Uses and Area Coverage	260
10-5	Estimating Your Paint	266
10-6	Paint Failure and Remedy	272
10-7	Wallpapering	274

CHAPTER 11 AUXILIARY TOPICS

11-1	Accordion Door Cover	277
11-2	Piles	279
11-3	Bituminous Surface Treatment	281
11-4	House of Water Tank	283
11-5	Filling Materials	285
11-6	Glass Jalousie	287
11-7	Nipa Shingle Roofing	288
11-8	Anahaw Roofing	290
11-9	Construction Terms	294

chapter 1

CONCRETE

1-1 PLAIN CONCRETE

By definition, concrete is an artificial stone as a result of mixing cement, fine aggregates, coarse aggregates and water. The conglomeration of these materials producing a solid mass is called plain concrete. Reinforced concrete is a concrete with reinforcement embedded in such a manner that the two materials act together in resisting forces.

The different types of cement used in the construction are:

1. Ordinary portland cement.
2. The Rapid Hardening portland cement is specified when high early strength is required.
3. Portland Blast Furnace or Sulphate is used to resist chemical attack.
4. Low Heat Portland cement is preferred for a massive section to reduce the heat of hydration.
5. Portland Pozzolan cement is a slow hardening concrete.
6. High Alumina cement.

The High Alumina Cement is sometimes called aluminous cement or "Cement Fundu". It's chemical composition is different from that of portland cement with predominant alumina oxide contents of at least 32% by weight. The Alumina lime ratio is within the limit of 0.85 to 1.3%. This type of cement has a very high rate of strength development as compared to the ordinary portland cement. Aside from it's rapid hardening properties, it can resist chemical attack by sulphate and weak acids including sea water. It could also withstand prolonged exposure to high temperature of more than, 1,000^{o} C. Alumina cement is not advisable for mixture with any other types of cement.

The main composition of cement are:

1. 60 to 65% Lime
2. 18 - 25% Silica
3. 3 - 8% Alumina
4. .5 - 5% Iron Oxide
5. 2 - 5% Magnesia
6. 1 - 5% Sulfur Trioxide

Aggregates. The aggregates used in concrete work are divided into two categories.

a. **Coarse Aggregate** such as crushed stone, crushed gravel or natural gravel with particles retained on a 5 mm sieve.

b. **Fine Aggregate** such as crushed stone sand, crushed gravel sand or natural sand with particles passing on a 5 mm sieve.

Size of Aggregates. For coarse aggregate or gravel, the maximum nominal size are usually 40 mm, 20 mm, 14 mm or 10

mm. The choice from the above sizes depends upon the dimension of the concrete member, however, a good practice demands that the maximum size of the gravel should not exceed 25% of the minimum thickness of the member nor exceed the clear distance between the reinforcing bars and the form. The aggregate shall be small enough for the concrete mix to flow around the reinforcement ready for compaction.

1-2 THE PRINCIPLES OF CONCRETE MIXING

The purpose in concrete mixing is to select an optimum proportion of cement, water and aggregates to produce a concrete that will satisfy the requirements of strength, workability, durability and economy.

The final proportion which will be adopted in concrete mixing must be established by actual trial and adjustment on site in order to attain the desired strength of concrete as required.

a) **The water cement ratio** is first chosen to meet the requirements of strength and durability.

b) **The aggregate cement ratio** is then chosen to satisfy the workability requirements.

In the final analysis, the water content is the most important factor to consider since it influences not only the strength and durability of the concrete but also the workability of the fresh concrete in actual pouring inside the forms.

The most important requirements of concrete are summarized as follows:

1. Fresh concrete must be workable which means that it could freely flow to fill all voids inside the form.

2. The hardened concrete must be strong enough to carry the designed load.

3. The hardened concrete could withstand the conditions to which it is exposed to serve.

4. Concrete should be economically produced.

Concrete mix may either be classified as **"Designed or Prescribed"**

Designed mix - where the contractor is responsible in selecting the mixture proportion to achieve the required strength and workability.

Prescribed mix - where the designing engineer specify the mixture proportion. The contractor's responsibility is only to provide a properly mixed concrete containing the right proportion.

1-3 UNIT OF MEASURES

Prior to the adoption of the metric measure which is otherwise known as the System International (SI), solid-concrete structure is estimated in terms of cubic meter, while the components of concrete which are cement aggregates and water are measured in terms of pounds, cubic foot and gallons per bag respectively. Lately, after the acceptance of the SI units of measure, the 94 pounds per bag of cement which is equivalent to 42.72 kg. was changed and fixed at 40 kilos per bag. This

simply means a reduction of about 3 kilos of cement per bag. Such changes requires adjustment of all measurements relative to the proportion of concrete.

The traditional measurement of a box being used to measure the sand and gravel is 12 inches wide , by 12 inches long and 12 inches high having a net volume of 1 cubic foot. This measurement will be changed to 30 x 30 x 30 cm. box which will be the basis of the values presented on Table 1-2 Concrete Proportion and all computations for estimating concrete.

Very recently, a 50 kg. weight per bag of cement was released in the market for commercial purposes. This new development was already incorporated in our tables and illustrations which the reader would see the comparative variations of the number of cement per cubic meter of a required class of mixture. (See Table 1-2)

TABLE 1-1 CONVERSION FROM INCHES TO METER

Number	Accurate Value	Approximate Value	Number	Accurate Value	Approximate Value
1	.0254	,025	21	.5334	.525
2	.0508	.050	22	.5588	.550
3	.0762	.075	23	.5842	.575
4	.1016	.100	24	.6096	.600
5	.1270	.125	25	.6350	.625
6	.1524	.150	26	.6604	.650
7	.1778	.175	27	.6858	.675
8	.2032	.200	28	.7112	.700
9	.2286	.225	29	.7366	.725
10	.2540	.250	30	.7620	.750
11	.2794	.275	31	.7874	.775
12	.3048	.300	32	.8128	.800
13	.3302	.325	33	.8382	.825
14	.3556	.350	34	.8636	.850
15	.3810	.375	35	.8890	.875
16	.4064	.400	36	.9144	.900
17	.4318	.425	37	.9398	.925
18	.4572	.450	38	.9652	.950
19	.4826	.475	39	.9906	.975
20	.5080	.500	40	1.0160	1.000

The values presented in Table 1-1 could serve in two purposes, one for the accurate conversion of distance from English to Metric and the other approximate value for our simplified methods of estimating.

Comments:

1) In solving problems, the probability of committing error is possible if more number is used.

Example:

It is easier to use .10 m the equivalent of 4 inches than the exact value of .1016, be it by multiplication or by division processes.

$\frac{8}{.10}$ = 80 by inspection and analysis

$\frac{8}{.1016}$ = 78.7 by long process of division or by the aid of a calculator.

2) The reader has no time to memorize the values given on Table 1-1, but by using a simple guide, anybody could easily get its equivalent from English to Metric.

Example:

a) Conversion from meter to feet, just divide the length by .30 say $\frac{6.00 \text{ m}}{.30}$ = 20 ft.

b) To convert feet to meter multiply by .30

30 ft. x .30 = 9.00 m.

c) To convert inches to meter, just remember the following values of equivalent.

1 inch	=	.025 m.
2 inches	=	.050 m.
3 inches	=	.075 m.
4 inches	=	.100 m.

Note that all length in inches are divisible by any one of these four numbers and could be easily converted into meter by summing up their divisible equivalent.

Example:

1) What is the meter length equivalent of 7 inches?
By simple analysis 7" could be the sum of 4 and 3

Therefore:

4 inches	=	.100 m.
3 inches	=	.075 m.
Answer	=	.175 m.

2) How about 21 inches to meter?

5 x 4"	=	20" = .500 m.
plus 1"	=	1" = .025 m.
Answer		21" = .525 m.

Using the simple guide, convert any number from inches to meter as an exercise problem.

1-4 CONCRETE PROPORTION

The most acceptable way of proportioning concrete is the volume method using a box for sand and gravel as explained in Section 1-3 Unit of Measure. The reasons behind it's traditional acceptance and use is the convenience in measuring and fast handling of the aggregates from the stock pile to the mixer. Not everybody could afford a weighing scale equipment for this purpose, besides this volume method of concrete proportion had long been proven to be effective and successful.

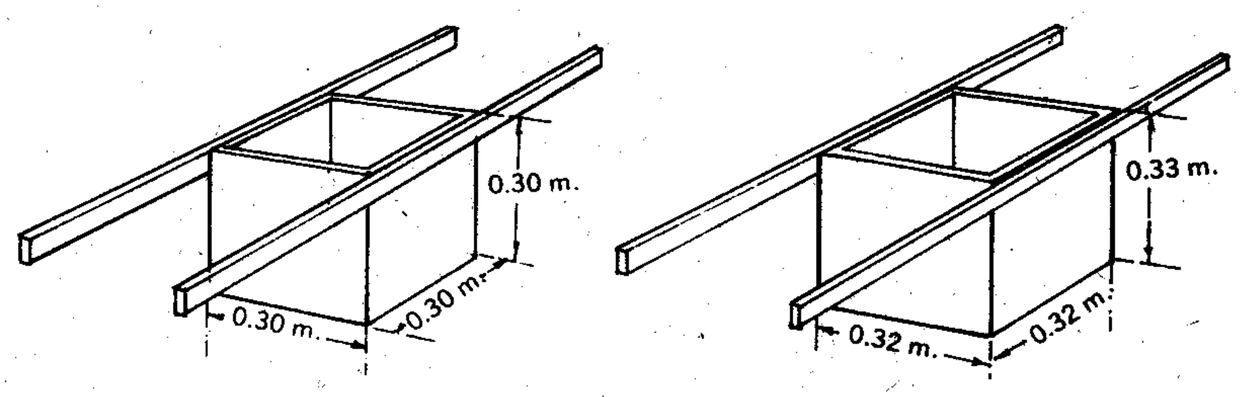

Box for 40 kg. cement Box for 50 kg. cement

MEASURING BOX

FIGURE 1-1

TABLE 1-2 CONCRETE PROPORTION

CLASS	MIXTURE	CEMENT		SAND cu. m.	GRAVEL cu. m.
		40 kg./bag	50 kg./bag		
AA	1 ; 1½ : 3	12.0	9.5	.50	1.0
A	1 : 2 : 4	9.0	7.0	.50	1.0
B	1 : 2½ : 5	7.5	6.0	.50	1.0
C	1 : 3 :6	6.0	5.0	.50	1.0

It will be noted that the volume of sand and gravel for all class of mixture is constant at .50 cu. m. and 1.0 cu. m. respectively. This is true on the assumption that the cement paste enters the void of the sand and at the same instance the combination of these two materials fills the void of the gravel and thereafter mixing, a solid mass is formed called solid concrete.

Based from actual concreting work, one cubic meter of gravel plus one half cubic meter sand mixed with cement paste will obtain a little bit more than one cubic meter solid concrete. The little excess over one cubic meter will be considered as contingencies.

Comments:

In actual construction work, there are several factors that might affect the accuracy of the estimate which needs special consideration they are:

1) Inaccurate volume of delivered aggregate by the supplier is very common.

2) Dumping of aggregates on uneven ground and grassy area reduces its usable volume.

3) Inadequate measuring of aggregates during the mixing operation affects the quantity of cement as computed, on the otherhand, over measuring of aggregates per batch of mixture might also affect the strength of the concrete. This is also a common practice when the work is on its momentum where the laborers fail to observed the importance of the measuring box.

4) The use of ordinary gravel (not the crushed stone) needs screening to conform with the specifications,

considerably the screening processes reduces the usable volume of the coarse aggregate or gravel.

5) The cement and fine aggregate used for grouting purposes to secure the bond of concrete joints are commonly overlooked in the estimates.

6) Cement waste due to bag breakage are usually caused by wreckless handling and hauling.

7) Pilferages of materials could be avoided if there is a good system of construction management.

1-5 CONCRETE SLAB

The discussion from cement to concrete proportions plus the Tables presented could be meaningful and appreciated only if accompanied by examples of actual applications.

ILLUSTRATION 1-1

A proposed concrete pavement has a general dimensions of 4 inches thick, 3.00 meters wide and 5.00 meters long. Considering the slab to be resting on the ground fill, determine the number of cement in bag, sand and gravel required using class C mixture.

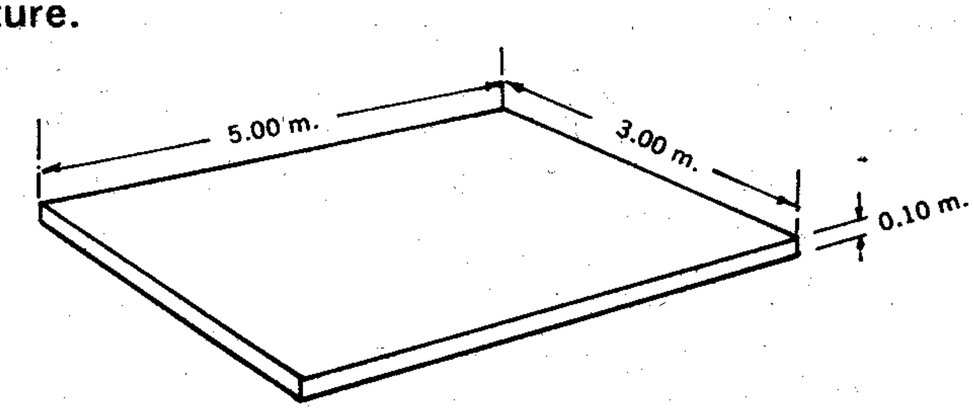

FIGURE 1-2

Solution:

1. Determine the volume of the proposed concrete pavement, convert 4 inches = .10m.

   V = .10 x 3.00 x 5.00
   V = 1.5 cu. m.

2. Referring to Table 1-2 using 40 kg. cement and class "C" mixture, multiply:

Cement:	1.5 x 6	=	9 bags
Sand :	1.5 x .50	=	.75 cu. m.
Gravel :	1.5 x 1.0	=	1.50 cu. m.

Suppose there is no available 40 kg. cement in the market and what is available is a 50 kg./bag cement. How many bags will be ordered.

Solution:

1) Knowing that the volume as computed is 1.5 cu. m.

2) Refer to Table 1-2 under 50 kg. cement using class "C" mixture multiply:

Cement:	1.5 x 5	=	7.5 bags
Sand :	1.5 x .5	=	.75 cu. m.
Gravel :	1.5 x 1.0	=	1.5 cu. m.

3) Since you cannot buy 7.5 bags, order 8 bags.

ILLUSTRATION 1-2

A barangay road 4.00 m. wide and one kilometer long after the base preparation requires concreting. Find the number of bags cement, sand and gravel in cu. m. required using class "A" concrete if the slab is 15 cm. thick.

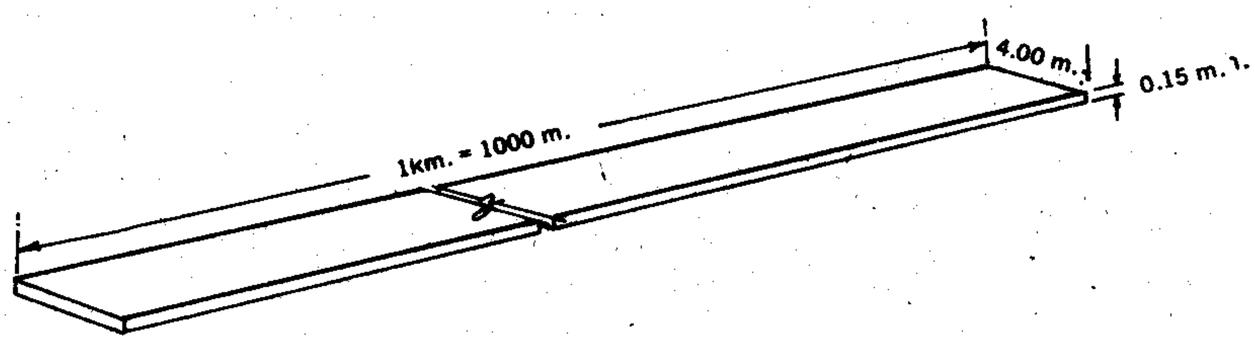

FIGURE 1-3

Solution

1. Determine the volume of the concrete road

   .15 m. x 4.00 x 1,000 m. (1 km.)
   V = 600 cu. m.

2. Referring to Table 1-2 using 40 kg. per bag, multiply:

Cement:	600 x 9	=	5,400 bags
Sand :	600 x .50	=	300 cu. m.
Gravel :	600 x 1.0	=	600 cu. m.

If no 40 kg. cement available, a 50 kg. per bag requires:

Cement: 600 x 7 = 4,200 bags
Gravel and Sand: the same as computed above.

1-6 ESTIMATING BY THE AREA METHOD

The preceding illustration is the volume method which could be simplified further by the area method with the aid of Table 1-3.

TABLE 1-3 QUANTITY OF CEMENT, SAND AND GRAVEL ON SLABS AND WALLS PER SQUARE METER

Thickness cm.	MIXTURE CLASS						SAND in cu. m.	GRAVEL
	40 kg. Cement Per Bag			50 kg. Cement Per Bag				
	A	B	C		B	C		
5.0	.450	.375	.30	.350	.300	.250	.0250	.050
7.5	.675	.563	.45	.525	.450	.375	.0375	.075
10.0	.900	.750	.60	.700	.600	.500	.0500	.100
12.5	1.125	.938	.75	.875	.750	.625	.0630	.125
15.0	1.350	1.125	.90	1.050	.900	.750	.0750	.150
17.5	1.575	1.313	1.05	1.225	1.050	.875	.0880	.175
20.0	1.800	1.500	1.20	1.400	1.200	1.000	.1000	.200
22.5	2.030	1.688	1.35	1.575	1.350	1.125	.1125	.225
25.0	2.250	1.875	1.50	1.750	1.500	1.250	.1250	.250
27.5	2.475	2.063	1.65	1.925	1.650	1.375	.1380	.275
30.0	2.700	2.250	1.80	2.100	1.800	1.500	.1500	.300

ILLUSTRATION 1-3

Adopting the problem of illustration 1-1 and 1-2 using Table 1-3 the solution will be:

For illustration 1-1

1) Solve for the pavement area

A = 3.00 x 5.00 m.
A = 15 sq. m.

2) Referring to Table 1-3 if thickness is 10 cm. under class "C" 40 kg. cement multiply:

Cement : 15 sq. m. x .60 = 9 bags
Sand : 15 sq. m. x .05 = .75 cu. m.
Gravel : 15 sq. m. x .100= 1.5 cu. m.

For illustration - 1-2

1) Find the area of the concrete barangay road
4.00 x 1,000 = 4,000 sq. m.

2) If the thickness is 15 cm. class "A" concrete from Table 1-3, multiply:

Cement : 4,000 x 1.35 = 5,400 bags
Sand : 4,000 x .075 = 300 cu. m.
Gravel : 4,000 x .150 = 600 cu. m.

1-7 CONCRETE COLUMN

ILLUSTRATION 1-4

A concrete column is 5.00 m high with a cross sectional dimensions of 25 cm. x 30 cm. If there are 8 columns of the same size. Find the required cement, sand and gravel if the plan specifies class "A" concrete.

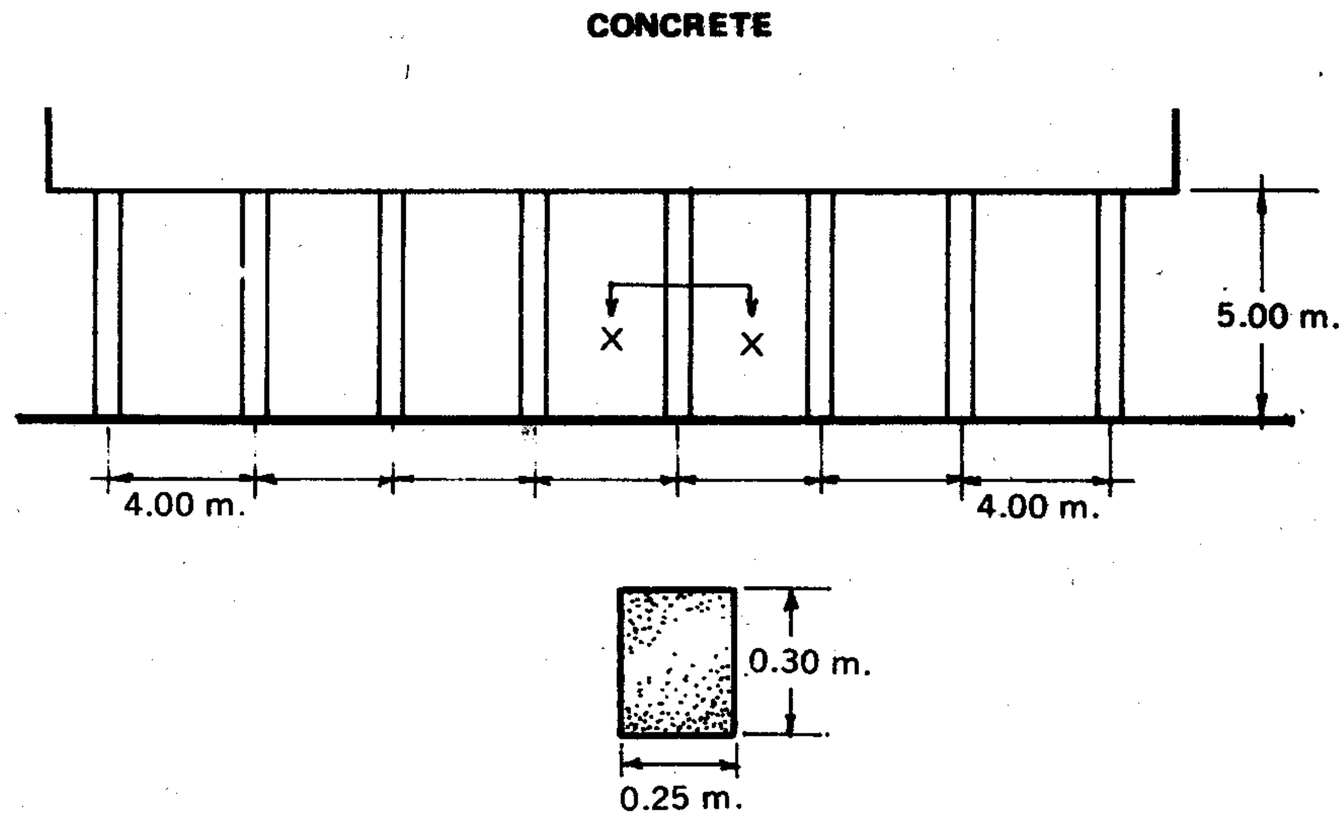

Cross Section X-X

FIGURE 1-4

Solution

1. Find the volume of one column

   V = .25 x .30 m. x 5.00 m (ht.)
   V = .375 cu. m.

2. Find the total volume of the 8 columns

   V = .375 x 8
   V = 3.0 cu. m.

3. Refer to Table 1-2 using class "A" concrete. Multiply:

   Cement : 3.0 x 9 = 27 bags @ 40 kg.
   Sand : 3.0 x .50 = 1.5 cu. m.
   Gravel : 3.0 x 1.0 = 3.0 cu. m.

1-8 ESTIMATING BY THE LINEAR METER METHOD

Again the method of computing the materials required for columns beams and girders could be simplified further with the aid of Table 1-4.

TABLE 1-4 QUANTITY OF CEMENT, SAND AND GRAVEL FOR POSTS, BEAMS AND GIRDERS PER METER LENGTH

SIZES in cm.	MIXTURE Cement in Bags 40 kg.		CLASS Cement in Bags 50 kg.		SAND in cu. m.	GRAVEL in cu. m.
	A	B	A	B		
15 x 15	.203	.169	.158	.135	.011	.023
15 x 20	.270	.225	.210	.180	.015	.030
15 x 25	.338	.281	.263	.225	.019	.038
15 x 30	.405	.338	.315	.270	.023	.045
15 x 35	.473	.394	.368	.315	.026	.053
15 x 40	.540	.450	.420	.360	.030	.060
20 x 20	.360	.300	.280	.240	.020	.040
20 x 25	.450	.375	.350	.300	.025	.050
20 x 30	.540	.450	.420	.360	.030	.060
20 x 35	.630	.525	.490	.420	.035	.070
20 x 40	.720	.600	.560	.480	.040	.080
25 x 25	.563	.469	.438	.375	.031	.063
25 x 30	.675	.563	.525	.450	.038	.075
25 x 35	.788	.656	.613	.525	.044	.088
25 x 40	.900	.750	.700	.600	.050	.100
25 x 45	1.013	.844	.788	.675	.056	.113
25 x 50	1.125	.938	.875	.750	.063	.125
30 x 30	.810	.675	.630	.540	.045	.090
30 x 35	.945	.788	.735	.630	.053	.105
30 x 40	1.080	.900	.840	.720	.060	.120
30 x 45	1.215	1.013	.945	.810	.068	.135
30 x 50	1.350	1.125	1.050	.900	.075	.150

35	x	35	1.103	.919	.858	.735	.061	.123
35	x	40	1.260	1.050	.980	.840	.070	.140
35	x	45	1.418	1.181	1.103	.945	.079	.158
35	x	50	1.575	1.313	1.225	1.050	.088	.175
35	x	55	1.733	1.444	1.348	1.155	.096	.193
35	x	60	1.890	1.575	1.470	1.260	.105	.210
40	x	40	1.440	1.200	1.120	.960	.080	.160
40	x	45	1.620	1.350	1.260	1.080	.090	.180
40	x	50	1.800	1.500	1.400	1.200	.100	.200
40	x	55	1.980	1.650	1.540	1.320	.110	.220
40	x	60	2.160	1.800	1.680	1.440	.120	.240
45	x	45	1.823	1.519	1.418	1.215	.101	.203
45	x	50	2.025	1.688	1.575	1.350	.113	.225
45	x	55	2.228	1.856	1.733	1.485	.124	.248
45	x	60	2.430	2.025	1.890	1.620	.135	.270
50	x	50	2.250	1.875	1.750	1.500	.125	.250
50	x	55	2.475	2.063	1.925	1.650	.138	.275
50	x	60	2.700	2.250	2.100	1.800	.150	.300
55	x	60	2.970	2.475	2.310	1.980	.165	.330
55	x	70	3.465	2.888	2.695	2.310	.193	.385
55	x	80	3.960	3.300	3.080	2.640	.220	.440
55	x	90	4.455	3.713	3.465	2.970	.248	.495
55	x	100	4.950	4.125	3.850	3.300	.275	.550
60	x	60	3.240	2.700	2.520	2.160	.180	.360
60	x	70	3.780	3.150	2.940	2.520	.210	.420
60	x	80	4.320	3.600	3.360	2.880	.240	.480
60	x	90	4.860	4.050	3.780	3.240	.270	.540
60	x	100	5.400	4.500	4.200	3.600	.300	.600
65	x	60	3.510	2.925	2.730	2.340	.195	.390
65	x	70	4.095	3.413	3.185	2.730	.228	.455
65	x	80	4.680	3.900	3.640	3.120	.260	.520
65	x	90	5.265	4.388	4.095	3.510	.293	.585
65	x	100	5.850	4.875	4.550	3.900	.325	.650

70	x 70	4.410	3.675	3.430	2.940	.245	.490
70	x 80	5.040	4.200	3.920	3.360	.280	.560
70	x 90	5.670	4.725	4.410	3.780	.315	.630
70	x 100	6.300	5.250	4.900	4.200	.350	.700
75	x 70	4.725	3.938	3.675	3.150	.263	.525
75	x 80	5.400	4.500	4.200	3.600	.300	.600
75	x 90	6.075	5.063	4.725	4.050	.338	.675
75	x 100	6.750	5.625	5.250	4.500	.375	.750
80	x 80	5.760	4.800	4.480	3.840	.320	.640
80	x 90	6.480	5.400	5.040	4.320	.360	.720
80	x 100	7.200	6.000	5.600	4.800	.400	.800
85	x 80	6.120	5.100	4.760	4.080	.340	.680
85	x 90	6.885	5.738	5.355	4.590	.383	.765
85	x 100	7.650	6.375	5.950	5.100	.425	.850
90	x 90	7.290	6.075	5.670	4.860	.405	.810
90	x 100	8.100	6.750	6.300	5.400	.450	.900
95	x 90	7.695	6.413	5.985	5.130	.428	.855
95	x 100	8.550	7.125	6.650	5.700	.475	.950
100	x 100	9.000	7.500	7.000	6.000	.500	1.000

Adopting the problem of illustration 1-4 using Table 1-4 the solution follows:

1. Find the total length of the 8 columns

   8 x 5 m. ht. = 40 mts.

2. Refer to Table 1-4, class "A" concrete for a

   25 x 30 cm. column size

3. Multiply:

   Cement: 40 x .675 = 27.0 bags
   Sand : 40 x .038 = 1.52 cu. m.
   Gravel : 40 x .075 = 3.0 cu. m.

1-9 POST AND FOOTING

ILLUSTRATION 1-5

A concrete column 4.00 m high with a cross sectional dimension of 20 cm. x 25 cm. is resting on a concrete footing 20 cm. thick by 80 cm. square. If class "B" concrete is specified, find the quantity of cement, sand and gravel if there are 12 columns of the same size.

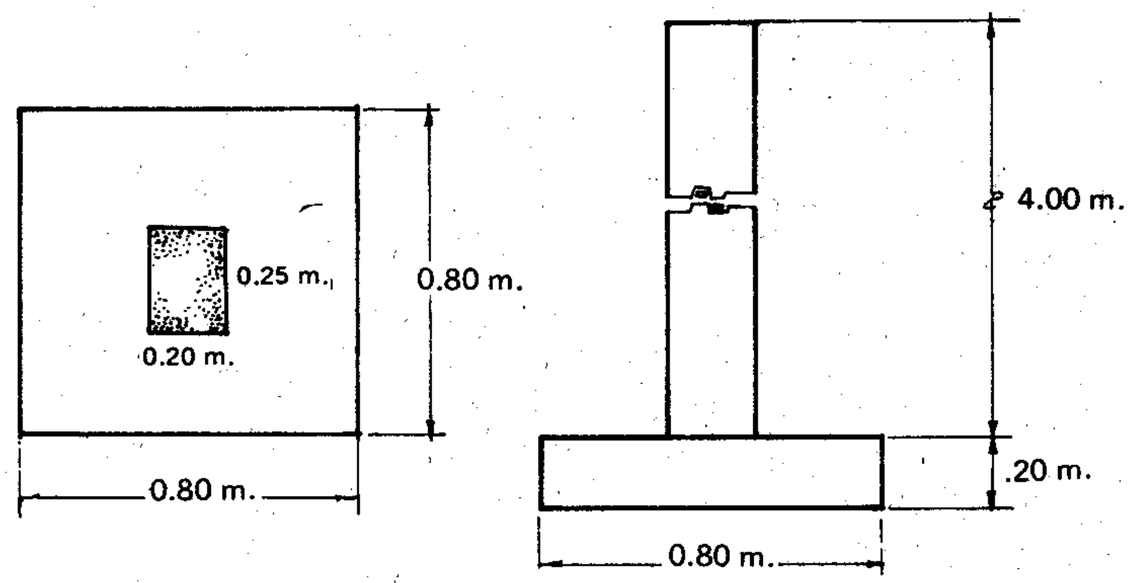

FIGURE 1-5

Solution

A) Column

1. Find the total length of the 12 columns

   12 x 4 = 48 m.

2. Refer to Table 1-4 along the 20 x 25 column size under class "B" mixture, multiply:

   Cement : 48 m. x .375 = 18 bags at 40 kg.
   Sand : 48 m x .025 = 1.2 cu. m.
   Gravel : 48 m. x .050 = 2.4 cu. m.

B) Footing Slab

1. Find the area of the footing

A = 12 pcs. x .80 x .80 = 7.68 sq. m.

2. Refer to Table 1-3 along the 20 cm. thick slab class "B" mixture multiply:

Cement	:	7.68	x	1.50	=	11.52 bags
Sand	:	7.68	x	.100	=	.76 cu. m.
Gravel	:	7.68	x	.200	=	1.53 cu. m.

C) Summary of A & B:

Cement	:	18	+	11.52	=	29.52	say 30 bags
Sand	:	1.2	+	.76	=	1.96	say 2 cu. m.
Gravel	:	2.4	+	1.53	=	3.93	say 4 cu. m.

ILLUSTRATION 1-6

From Figure 1-5 determine the number of 40 kg. cement including the sand and gravel required, using class "A" concrete for the footing and class "C" for the flooring.

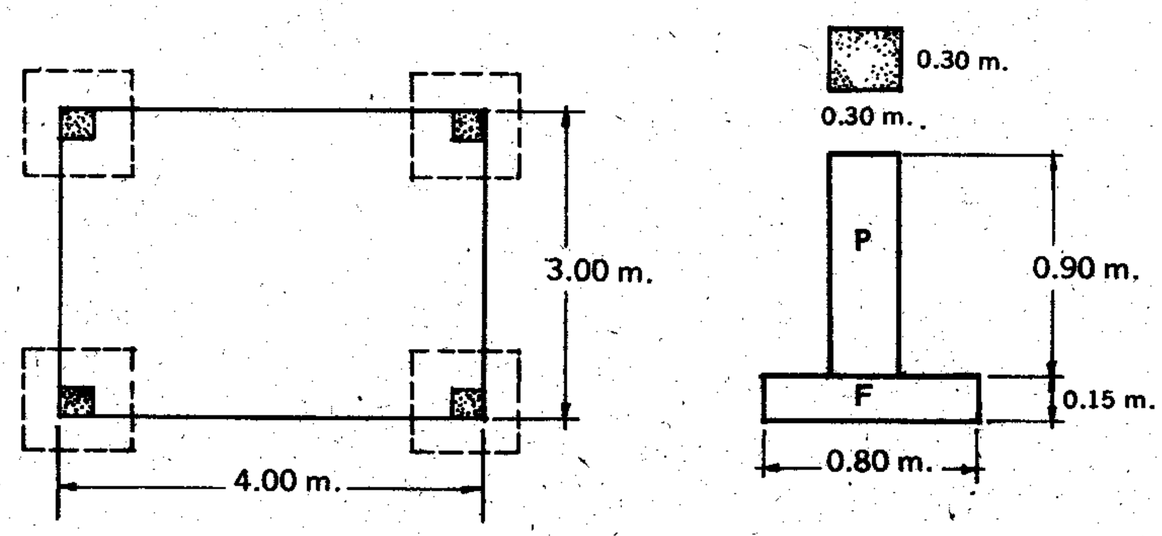

FIGURE 1-6

Solution

A. Footing Slab

1. Solve for the volume of "F"

V = .15 x .80 x .80
= .096 cu. m.

2. Multiply by 4 pcs.

.096 x 4 ——— = 0.384

B. Pedestal

1. Solve for the volume of "P"

V = .30 x .30 x .90
= .081

2. Multiply by 4 pcs.

.081 x 4 ——— = 0.324

Total volume ——— = 0.708 cu. m.

3. Using class "A" concrete from Table 1-2 Multiply:

Cement	:	.708 x 9	=	6.37 bags @ 40 kgs.
Sand	:	.708 x .50	=	.354 cu. m.
Gravel	:	.708 x 1.0	=	.708 cu. m.

C. Concrete Slab

1. Determine the volume of the slab

V = .10 x 3.00 x 4.00
= 1.2 cu. m.

2) Using class "C" mixture from Table 1-2
Multiply:

Cement	:	1.2	x 6	=	7.2 bags @ 40 kgs.
Sand	:	1.2	x .50	=	0.6 cu. m.
Gravel	:	1.2	x 1.0	=	1.2 cu. m.

SUMMARY

Total Cement	:	6.37 +	7.2	=	13.57 say 14 bags
Sand	:	.354 +	0.6	=	.95 say 1 cu. m.
Gravel	:	.708 +	1.2	=	1.9 say 2 cu. m.

Comment:

To a meticulous estimator, the floor area occupied by the footing will be subtracted from the floor area or volume.

Problem exercise:

Using the same problem of illustration 1-6, solve for the quantity of cement at 50 kg. per bag, the sand and gravel in cubic meter using the linear meter method and the area method of estimating.

Note:

The answer for cement quantity will not tally with the 14 bags as computed in the preceding solution because we are using 50 kg. per bag cement. However, the answer could be checked and compared by converting the number of bags into kilograms. For sand and gravel the answer will be the same.

1-10 RECTANGULAR COLUMN

ILLUSTRATION 1-7

A series of 8 concrete columns with cross-sectional dimension of 40 x 60 cm. is supporting a girder each having a clear height of 5.00 meters. Find the quantity of cement at 50 kg. per bag, sand and gravel using class "A" mixture.

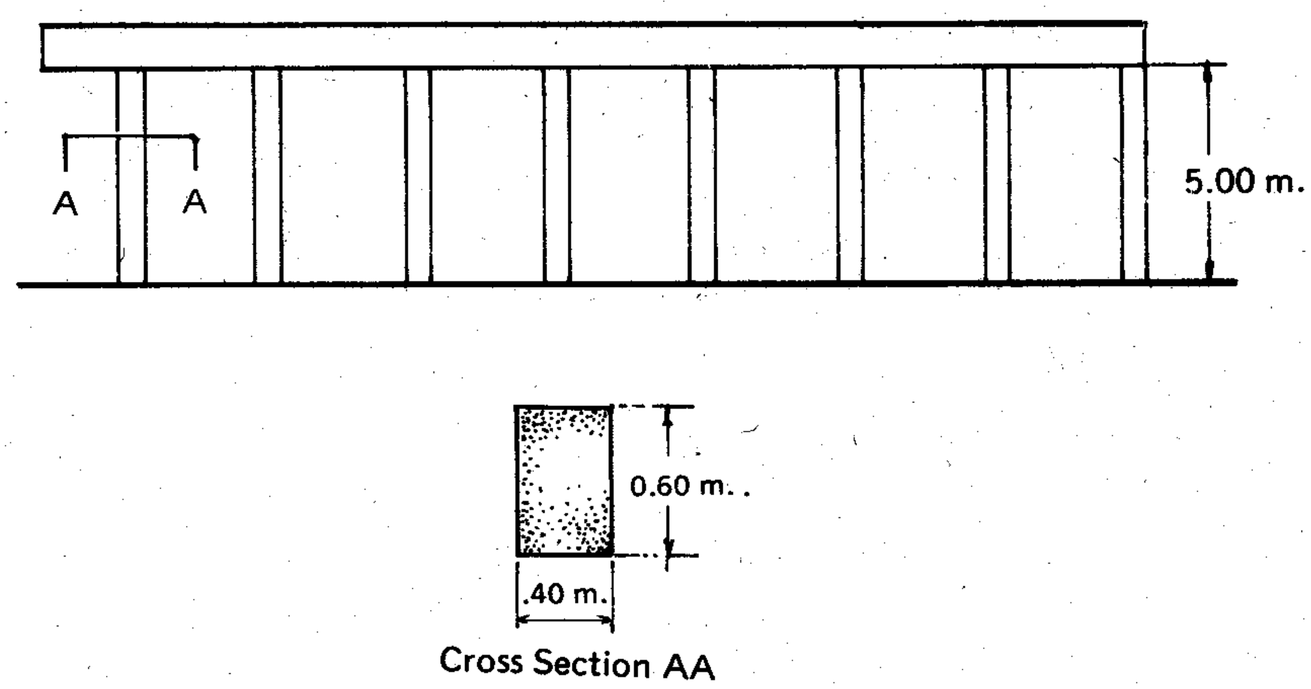

FIGURE 1-7

Solution

1. By linear meter method:
   Find the total length of the 8 columns

   8 x 5 = 40 meters

2. Refer to Table 1-4 along the 40 x 60 cm. column size under class "A" measure of 50 kg./bag cement

Multiply:

Cement	40 x 1.680	=	67.2 bags
Sand	40 x .120	=	4.8 cu. m.
Gravel	40 x .240	=	9.6 cu. m.

Problem exercise:

Adopting the same problem of illustration 1-7, solve for cement at 40 kg. and 50 kg. per bag including the sand and gravel required by volume method. Check your answer by comparison for cement weight in kg.

1-11 RECTANGULAR BEAM AND GIRDER

ILLUSTRATION 1-8

From Figure 1-8, prepare the bill of materials for the rectangular beam and girder using class "A" concrete.

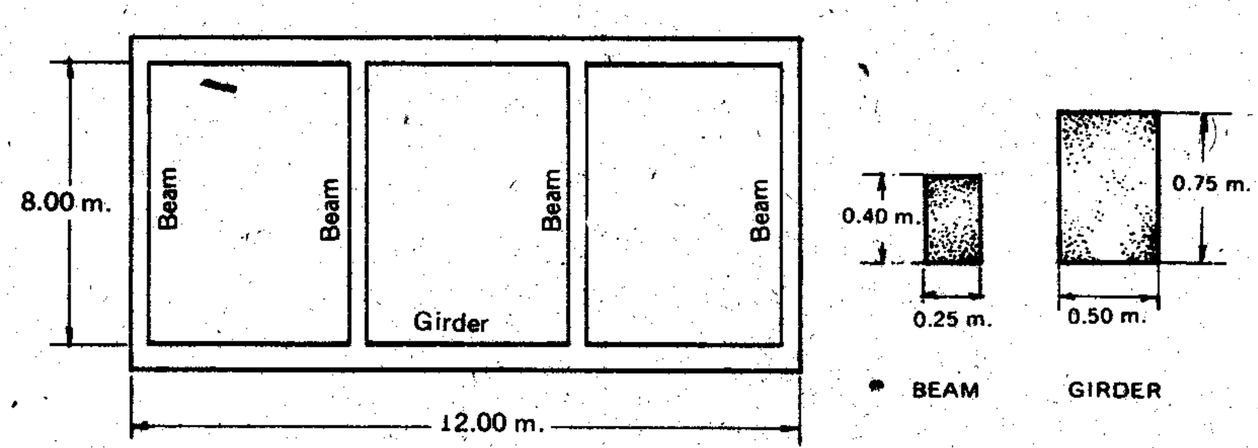

FIGURE 1-8

Solution

1. Solve for the volume of the beam

   4 pcs. x .25 x .40 x 8.00 m. long
   V = 3.2 cu. m.

2. Find the volume of the girder

   V = 2 pcs. x .50 x .75 x 12.00 m.
   V = 9 cu. m.

3. Total volume

   3.2 + 9 = 12.2 cu. m.

4. Refer to Table 1-2 using 40 kg. cement using class "A" mixture multiply:

Cement	: 12.2 x 9 =	109.8 say 110 bags
Sand	: 12.2 x .50 =	6.1 cu. m.
Gravel	: 12.2 x 1.00 =	12.2 cu. m.

1-12 CIRCULAR COLUMN

ILLUSTRATION 1-9

A circular column with a cross-sectional diameter of 60 cm. has a clear height of 6.00 meters. Find the quantity of cement, sand and gravel required using class "A" concrete if there are 5 columns in a row of the same size.

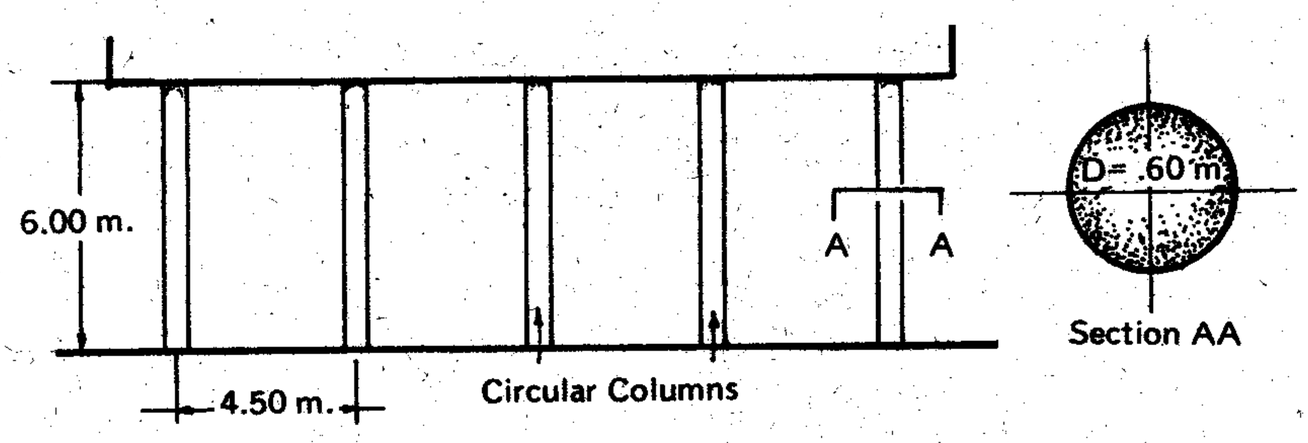

FIGURE 1-9

Solution

1. Solve for the cross sectional area

$$A = \pi r^2$$
$$A = 3.1416 \times .30^2$$
$$A = .283 \text{ sq. m.}$$

2. Find the volume of the 5 columns

$$V = 5 \text{ pcs.} \times .283 \times 6 \text{ m.}$$
$$V = 8.49 \text{ cu. m.}$$

3. Refer to Table 1-2 using class "A" concrete
   Multiply:

Cement:	8.49 x 9	=	76.4	bags
Sand :	8.49 x .50	=	4.2	cu. m.
Gravel :	8.49 x 1.0	=	8.49	cu. m.

Another method in solving for a circular column is with the aid of Table 1- 5 where the quantity of cement, sand and gravel per linear meter are given at specified diameter.

TABLE 1-5 QUANTITY OF CEMENT AND AGGREGATE PER LINEAR METER OF A CIRCULAR COLUMN

Diameter in cm.	CEMENT in BAGS 40 kg. Mixture A	40 kg. Mixture B	50 kg. Mixture A	50 kg. Mixture B	SAND cu. m.	GRAVEL cu. m.
25	.442	.368	.344	.295	.025	.059
30	.636	.530	.495	.424	.035	.071
35	.866	.722	.673	.577	.048	.096
40	1.131	.942	.880	.754	.063	.126
45	1.431	1.193	1.113	.954	.080	.159
50	1.767	1.473	1.374	1.178	.098	.196
55	2.138	1.782	1.663	1.425	.119	.238
60	2.545	2.121	1.979	1.696	.141	.283
65	2.986	2.488	2.323	1.991	.166	.332
70	3.464	2.866	2.694	2.309	.192	.385
75	3.976	3.313	3.093	2.651	.221	.442
80	4.524	3.770	3.519	3.016	.251	.503
85	5.107	4.256	3.972	3.405	.284	.567
90	5.726	4.771	4.453	3.817	.318	.636
100	7.069	5.890	5.498	4.712	.393	.785

Solving the above problem using Table 1-5 the procedure follows

1. Find the total length of the columns
   6.00 m. ht. x 5 pcs. = 30 m.

2. Refer to Table 1-5 along the .60 m. diameter column.

Multiply:

Cement	30	x	2.545	=	76.3 bags
Sand	30	x	.141	=	4.2 cu. m.
Gravel	30	x	.283	=	8.49 cu. m.

1-13 CONCRETE PIPES

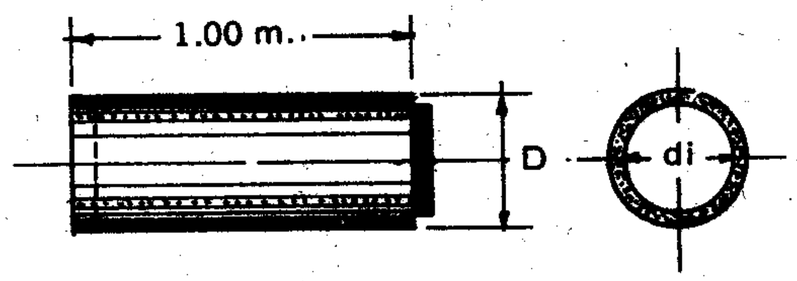

FIGURE 1-10

TABLE 1-6 QUANTITY OF CEMENT, SAND AND GRAVEL PER CONCRETE PIPE

Diameter in cm		CEMENT IN KILOS Class of Mixture		SAND in cu. m.	GRAVEL in cu. m.
Do	di	A	B		
25	15	11.31	9.42	.016	.0314
30	20	14.14	11.78	.020	.0400
40	25	27.57	22.97	.038	.0770
45	30	31.81	26.51	.044	.0884
55	40	40.29	33.58	.056	.1120
60	45	44.53	37.11	.062	.1240
65	50	48.77	40.64	.068	.1360
80	60	79.17	65.97	.110	.2200
85	65	84.82	70.69	.118	.2360
90	70	90.48	75.40	.126	.2510
95	75	96.13	80.11	.134	.2670
100	80	101.79	84.82	.141	.2830
110	90	113.10	94.25	.157	.3140
120	100	124.41	103.67	.173	.3460
145	120	187.32	156.10	.260	.5200
175	150	229.73	191.44	.319	.6380

ILLUSTRATION 1-10

A road construction requires 12 pcs. concrete pipes at 90 cm. diameter for drainage purposes. Determine the quantity of cement, sand and gravel required for the manufacture of said pipes using class "A" concrete (except for the reinforcement which will be discussed in Chapter 3).

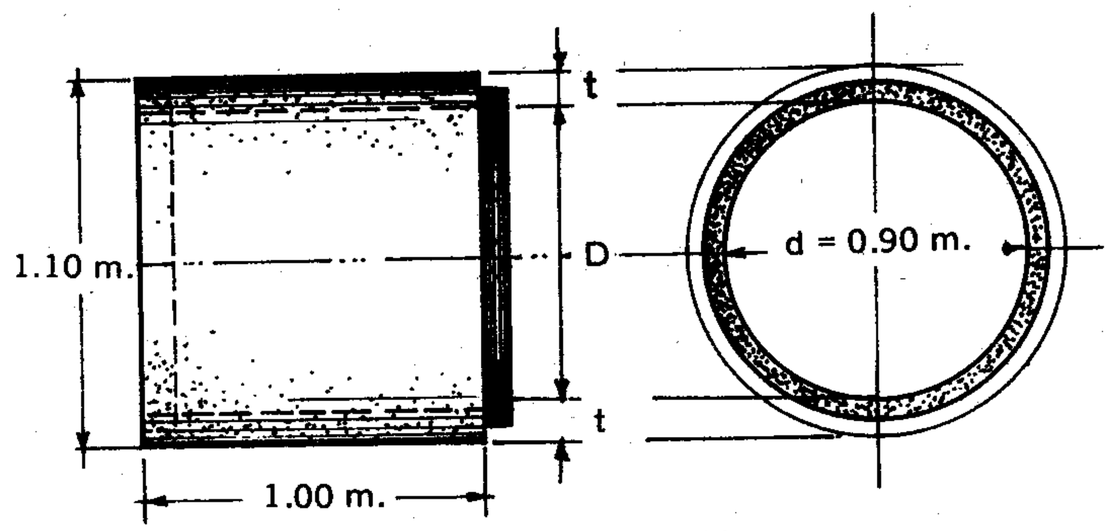

Concrete Pipe

FIGURE 1-11

1st Solution

1. Find the gross volume of the pipe

$$V = .7854\ D^2\ h$$
$$V = .7854 \times 1.10^2 \times 1.00 \text{ m. ht.}$$
$$V = .95 \text{ cu. m.}$$

2. Find the volume of the hole

$$V = .7854 \times d^2 h$$
$$V = .7854 \times .90^2 \times 1.00 \text{ m. ht.}$$
$$V = .636$$

3. Subtract the result of 2 from 1

.95 – .636 = .314

4. Volume of 12 pipes

12 x .314 = 3.77

5. Refer to Table 1-2 using class "A" mixture

Multiply:

Cement	: 3.77 x 9	=	33.93 bags
Sand	: 3.77 x .5	=	1.88 cu. m.
Gravel	: 3.77 x 1.0	=	3.77 cu. m.

2nd Solution

1. Refer to Table 1-6 for a di = 90 cm. ø pipe

Multiply:

Cement: 113.10 x 12 pcs. = 1,357.20 kg.

Convert Cement to number of bags:

$$\frac{1{,}357.20 \text{ kg.}}{40 \text{ kg.}} = 33.93 \text{ bags}$$

For 50 kg. cement:

$$\frac{1{,}357.20 \text{ kg.}}{50 \text{ kg.}} = 27.14 \text{ bags}$$

Sand : 12 pcs. x .157 cu. m. = 1.88 cu. m.
Gravel: 12 pcs. x .314 cu. m. = 3.77 cu. m.

chapter 2

MASONRY

2-1 CONCRETE HOLLOW BLOCKS

Concrete Hollow Blocks are classified as bearing and non-bearing blocks. Load bearing blocks are those whose thickness ranges from 15 cm. to 20 cm. and are used to carry load aside from its own weight. Non-bearing blocks on the otherhand, are blocks which are intended for walls, partitions, fences or dividers carrying its own weight whose thickness ranges from 7.5 cm. to 10 cm.

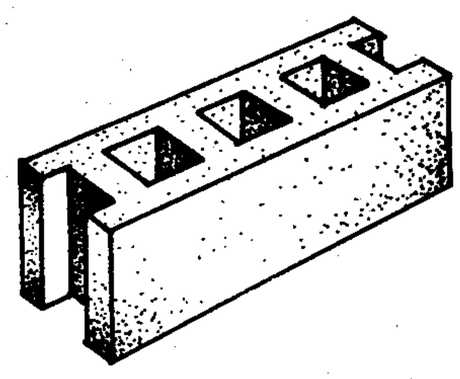

FIGURE 2-1

Concrete Hollow Blocks has three whole cells and two one half cells at both ends having a total of four. These cells vary in sizes as there are different manufacturers using diffe-

rent moulds. The varying sizes of the cells will affect the estimated quantity of materials. For this reason, it is recommended that the bigger cell be adopted in our computation.

In computing the required materials for concrete hollow block works, the estimator has to consider the following items:

1. Quantity of the concrete hollow blocks.
2. Quantity of the cement and sand for block laying mortar.
3. Quantity of the cement and sand for mortar to fill the hollow cell of every block.
4. The cement and sand required for plastering one or two sides of the blocks.
5. The materials for CHB footing and concrete post as required.
6. The steel reinforcements and tie wires to be treated separately in Chapter 3.

Other factors that might affect the estimated quantity of materials

1. Improper measure of aggregates during the block laying work. The most common attitude of the worker is to mix sand and gravel with cement disregarding the measuring box.

2. Sometimes the mason prepares a box for measuring sand or gravel not in accordance with the specified measurement.

3. Addition of cement to over exposed mixed mortar not used or applied on time.

4. The excess mortar for installation of hollow blocks are usually dumped in a certain corner of the construction site. This is a common practice especially after working hours where no overtime pay is authorized.

These are considered as minor thing in the construction work which are simply overlooked, but summing them up for a months work will surprisingly result to a figure beyond expectation affecting the estimate.

LAYING BLOCK

TABLE 2-1 QUANTITY OF CEMENT AND SAND FOR MORTAR AND PLASTER MIXTURE PER CUBIC METER

CLASS	MIXTURE	CEMENT in BAGS 40 kg.	CEMENT in BAGS 50 kg.	SAND cu. m.
A	1:2	18.0	14.5	1.0
B	1:3	12.0	9.5	1.0
C	1:4	9.0	7.0	1.0
D	1:5	7.5	6.0	1.0

Illustration 2-1

From Figure 2-2, determine the number of 10 x 20 x 40 cm. concrete hollow blocks and the required materials for:

a) mortar for block laying
b) mortar for plastering and
c) footing, using class "B" mixture

SIMPLIFIED CONSTRUCTION ESTIMATE

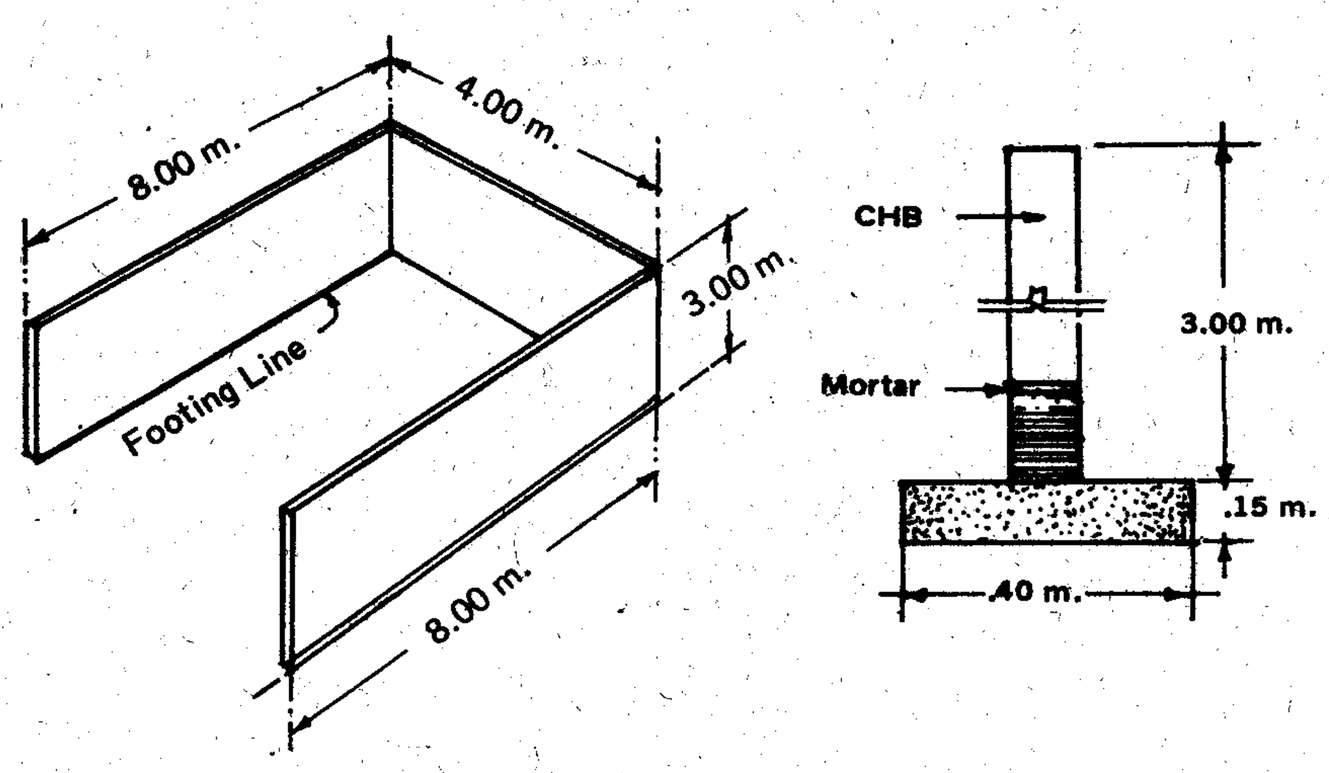

FIGURE 2-2

Solution - 1

A. Concrete Hollow Blocks

1. Divide the height of the fence by the height of one block.

$$\frac{3.00 \text{ m.}}{.20 \text{ m}} = 15 \text{ pcs.}$$

2. Divide the total length of the fence by the length of one block.

$$\frac{20.00 \text{ m.}}{.40 \text{ m.}} = 50 \text{ pcs.}$$

3. Multiply the result of 1 and 2.

$$15 \times 50 = 750 \text{ pcs.}$$

B. Mortar for Block Laying: Average thickness @ .0125

1. Find the volume of the mortar (one layer)

$$V = t \times w \times L$$
$$V = .0125 \times .10 \times 20 \text{ m.}$$
$$= .025 \text{ cu. m.}$$

2. Multiply by the number of layers to get the total volume.

$$\text{Total } V = .025 \times 15$$
$$= .375 \text{ cu. m.}$$

3. Refer to Table 2-1 using class "B" mixture 40 kg. cement

Multiply:

Cement	.375 x 12	=	4.5 bags
Sand	.375 x 1.0	=	.375 cu. m.

C. Mortar filler for hollow cell

1. Find the volume of one cell

$$V = .05 \times .075 \times .20$$
$$V = .00075 \text{ cu. m.}$$

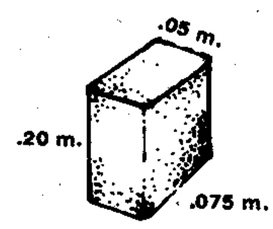

CHB Cell

2. Volume of 4 cells per block

$$V = .00075 \times 4$$
$$V = .003$$

3. Total volume of cells for 750 CHB

V = .003 x 750
V = 2.25 cu. m.

4. Refer to Table 2-1 using class "B" mixture 40 kg. cement.

Multiply:

Cement : 2.25 x 12 = 27 bags
Sand : 2.25 x 1.0 = 2.25 cu. m.

D. Plastering at an average of 16 mm (.016 m.) thick

1. Find the area of the fence (one side)

3.00 x 20 = 60 sq. m.

2. Find the area of the two sides

60 x 2 = 120 sq. m.

3. Solve for the volume

V = 120 x .016
V = 1.92 cu. m.

4. Refer to Table 2-1 using class "B" mixture 40 kg.

Multiply:

Cement : 1.92 x 12 = 23.04 bags
Sand : 1.92 x 1.0 = 1.92 cu. m.

E. Footing

1. Find the volume of the footing

V = t x w x L

V = .15 x .40 x 20.00
V = 1.20 cu. m.

2. Refer to Table 1-2 using class "B" concrete 40 kg. cement

Multiply:

Cement :	1.20 x 7.5 =	9 bags
Sand :	1.20 x .50 =	.60 cu. m.
Gravel :	1.20 x 1.0 =	1.20 cu. m.

Summary of the Materials

1. Concrete Hollow Blocks	- - - - - -	750 pcs.
2. 40 kg. Cement	- - - - - -	63.54 say 64 bags
3. Sand	- - - - - -	5.145 cu. m.
4. Gravel	- - - - - -	1.20 cu. m.

Comments:

1. What is lacking in this computation is the reinforcement to complete the CHB work, this item will be treated separately under the reinforcement topic in Chapter 3.

2. The computation procedure as presented is classified under the fundamental method which is complicated but could be simplified with the aid of Table 2-2 and 2-3.

OK

TABLE 2-2 QUANTITY OF CEMENT AND SAND FOR CHB MORTAR PER SQ. M. (FILLER & LAYING)

SIZE OF CHB in cm.	NUMBER PER sq. m.	CEMENT IN BAGS 40 kg. MIXTURE B	C	D	50 kg. MIXTURE B	C	D	SAND in cu. m.
10 x 20 x 40	12.5	.525	.394	.328	.416	.306	.263	.04375
15 x 20 x 40	12.5	1.013	.759	.633	.802	.591	.506	.08438
20 x 20 x 40	12.5	1.500	1.125	.938	1.188	.875	.750	.12500

TABLE 2-3 QUANTITY OF CEMENT, SAND AND GRAVEL FOR CHB FOOTING PER LINEAR METER

DIMENSION in t	DIMENSION cm. w	CEMENT IN BAGS CLASS OF MIXTURE 40 kg. A	40 kg. B	50 kg. A	50 kg. B	SAND cu. m.	GRAVEL cu. m.
10	30	.270	.225	.210	.180	.015	.030
10	35	.315	.263	.245	.210	.018	.035
10	40	.360	.300	.280	.240	.020	.040
10	50	.450	.380	.350	.300	.025	.050
15	40	.540	.450	.420	.360	.030	.060
15	45	.608	.506	.473	.405	.034	.068
15	50	.675	.563	.525	.450	.038	.075
15	60	.810	.675	.630	.540	.045	.090
20	40	.720	.600	.560	.480	.040	.080
20	50	.900	.750	.700	.600	.050	.100
20	60	1.080	.900	.840	.720	.060	.120

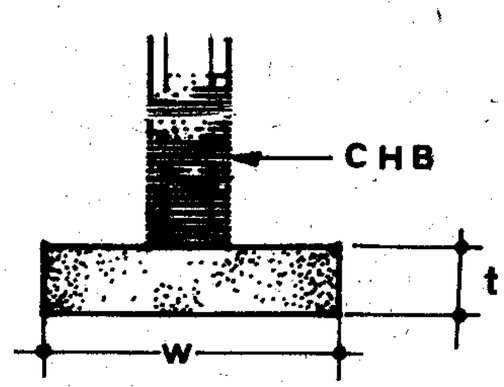

TABLE 2-4 QUANTITY OF CEMENT AND SAND FOR PLASTERING PER SQ. M. *

CLASS MIXTURE	CEMENT IN BAGS 40 kg.	50 kg.	SAND Cu. M.
A	.288	.232	.016
B	.192	.152	.016
C	.144	.112	.016
D	.120	.096	.016

** Thickness computed at 16 mm.*

Solution - 2

A. Concrete Hollow Blocks

1. Find the area of the fence

   3.00 x 20.00 m. = 60 sq. m.

2. Refer to Table 2-2, multiply:

   60 x 12.5 = 750 pcs. CHB

B. Mortar for Block laying and filler of the cell

1. Referring to Table 2-2 using class "B" mixture 40 kg. cement

   Multiply:

   Cement : 60 x .525 = 31.5 bags
   Sand : 60 x .04375 = 2.625 cu. m.

C. Plaster Mortar

1. Find the area to be plastered

   60 x 2 = 120 sq. m. two faces

2. Referring to table 2-4 using class "B" mixture 40 kg. cement

   Multiply:

   Cement : 120 x .192 = 23.04 bags
   Sand : 120 x .016 = 1.92 cu. m.

D. Footing

1. Determine the total length of the footing: = 20 m.

2. Referring to Table 2-3 using class "B" concrete:
   For a 15 x 40 cm. Footing, Multiply:

Cement	:	20 m.	x .450	=	9.0 . bags
Sand	:	20 m.	x .030	=	.60 cu. m.
Gravel	:	20 m.	x .060	=	1.20 cu. m.

Summary of the Materials

1. Concrete Hollow Blocks	------	750	pcs.
2. 40 kg. Cement	-------	63.54	say 64 bags
3. Sand	-------	5.145	cu. m.
4. Gravel	-------	1.20	cu. m.

Problem Exercise:

From Figure 2-3, find the quantity of 15 cm. x 20 x 40 cm. CHB, 50 kg. cement per bag, sand and gravel required using class "B" mixture by fundamental methods and by the aid of Tables.

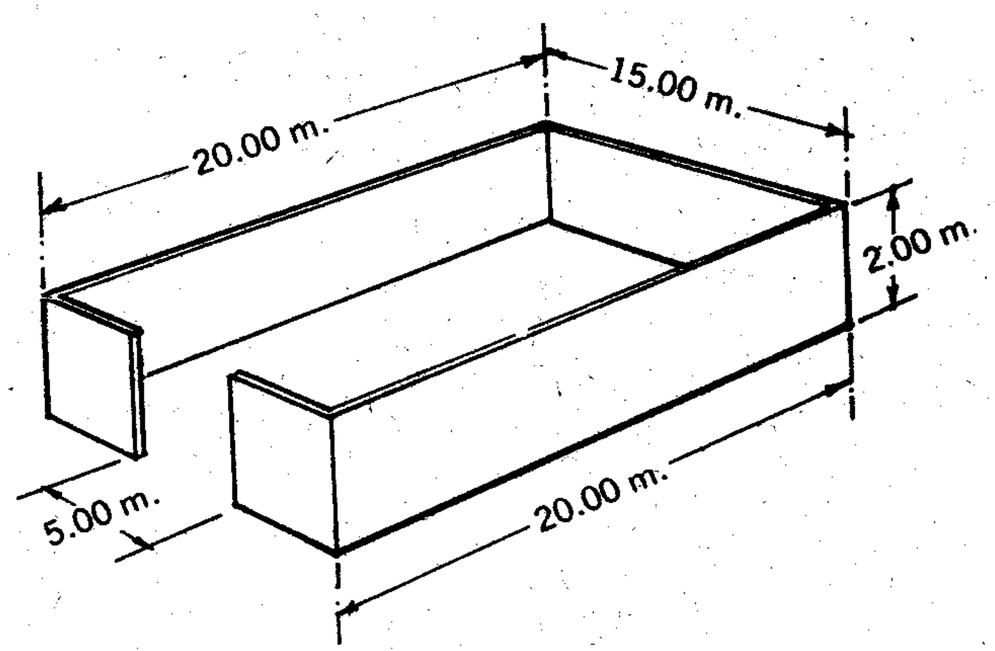

FIGURE 2-3

ILLUSTRATION 2-2

From Figure 2-4 prepare the Bill of Materials using class "B" mixture.

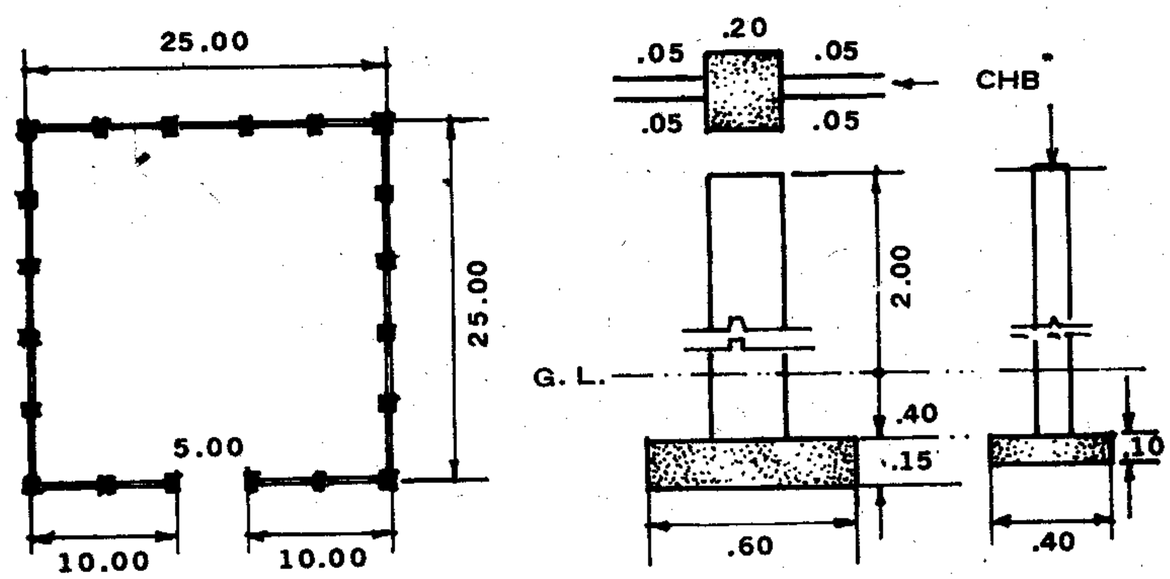

FIGURE 2-4

Solution

A. **Concrete Hollow Blocks**

1. Find the total length or perimeter of the fence

   P = 95 m.

2. Subtract the space occupied by the posts

   95 – (20 posts × .20)
   = 95 – 4
   = 91 m. net length

3. Solve for the area of the fence

   A = 2.40 × 91 m.
   A = 218.4 sq. m.

4. Referring to Table 2-2

Multiply:

CHB: 218.4 x 12.5 = 2,730 pcs.

B. Cement Mortar for Block Laying and Cell Filler

1. Referring to Table 2-2 using class "B" mixture 40 kg. cement

   Multiply:

   Cement : 218.4 x .525 = 114.66 bags

   Sand : 218.4 x .04375 = 9.55 cu. m.

C. Plasteringof the fence to ground line only (2.00 m.)

1. Solve for the area

   A = Ht. x Perimeter
   A = 2.00 x 91 m.
   A = 182 sq. m. one face
   Two faces: 182 x 2 = 364 sq. m.

2. Referring to Table 2-4 using class B mixture

   Multiply:
   Cement : 364 x .192 = 69.88 say 70 bags
   Sand : 364 x .016 = 5.82 say 6 cu. m.

D. Footing of Posts = .60 x .60 square

1. Solve for the volume of the footing

   V = t x w x L
   V = .15 x .60 x .60 x 20 posts
   V = 1.08 cu. m.

2. Referring to Table 1-2 class "B" mixture
   Multiply:

Cement : 1.08 x 7.5 = 8.1 bags
Sand : 1.08 x .50 = .54 cu. m.
Gravel : 1.08 x 1.0 = 1.08 cu. m.

E. CHB Footing

1. Total length of the fence less the space occupied by the post footings (.60 x .60 m.)

   95 m. – (.60 x 19 posts)
   = 95 – 11.40
   = 83.6 m.

Note:

The number of post is 19 pcs. only instead of 20 pieces because there are two posts at the gate entrance wherein only one half of it's footing occupies the CHB footing.

2. Referring to Table 2-3 using 40 kg. cement class "B" mixture. 10 x 40 cm. Footing

   Multiply:
   Cement : 83.6 x .30 = 25 bags
   Sand : 83.6 x .02 = 1.67 cu. m.
   Gravel : 83.6 x .04 = 3.34 cu. m.

F. Concrete Post

1. Solve for the volume

   .20 x .20 x 2.40 x 20 posts
   = 1.92 cu. m.

2. From Table 1-2 using class "B" mixture 40 kg. cement

Multiply:

Cement	: 1.92 x 7.5	=	14.4 bags
Sand	: 1.92 x .50	=	.96 cu. m.
Gravel	: 1.92 x 1.0	=	1.92 cu. m.

G. Plastering of the Post (if necessary)

1. Solve for the surface area of the post less the area occupied by the CHB (.20 x 2.00)

   .60 x 2.00 m. ht. x 20 posts
   = 24 sq. m.

2. Referring to Table 2-4 using class "B" mixture 40 kg. cement

Multiply:

Cement	24 x .192	=	4.6 bags
Sand	24 x .016	=	.384 cu. m.

Summary

Concrete Hollow Blocks	------ 2,730 pieces
Cement	------ 237 bags
Sand	------ 19.10 cu. m.
Gravel	------ 6.34 cu. m.

ILLUSTRATION 2-3

From Figure 2-5 prepare the Bill of Materials using class "B" concrete and class "C" mortar.

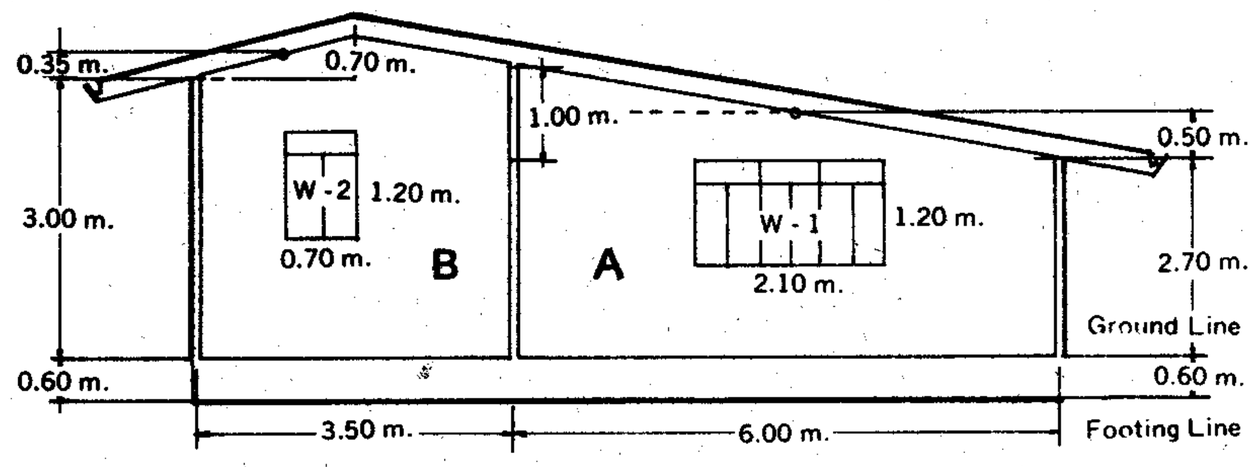

FIGURE 2-5

Solution

A. Concrete Hollow Blocks

1. Find the area of "A"

   A = 6.00 x (2.70 + .50 + .60) = 22.8 sq. m.

2. Find the area of "B"

   B = 3.50 x (3.00 + .35 + .60) = 13.825 sq. m.

   Total Area - 36.625 sq. m.

3. Less Area of the windows

   W - 1 = 2.10 x 1.20 = 2.52 sq. m.

   W - 2 = .70 x 1.20 = .84 sq. m.

   Total Area of W-1 and W-2 = 3.360 sq. m.

   Net Wall Area - - - - 33.265 sq. m.

4. Referring to Table 2-2, multiply:

   CHB: 33.265 x 12.5 = 415.8 say 416 pcs.

B. Cement Mortar

1. Referring to Table 2-2 using class "C" mixture 40 kg. cement.

   Multiply

   Cement : 33.265 x .759 = 25.24 bags
   Sand : 33.265 x .08438 = 2.81 cu. m.

C. Cement Plaster

1. Referring to Table 2-4 using class C Mixture:

   Multiply:

   Cement : 33.265 x .144 = 4.79 bags
   Sand : 33.265 x .016 = .53 cu. m.

D. Footings

1. Total length of the wall = 9.50 m.
2. Referring to Table 2-3 for a (15 x 40) footing using class "B" concrete

   Multiply:

   Cement : 9.50 x .450 = 4.28 bags
   Sand : 9.50 x .030 = .28 cu. m.
   Gravel : 9.50 x .060 = .57 cu. m.

2-2 COMPARATIVE COST ANALYSIS BETWEEN A REINFORCED CONCRETE WALL AND A CONCRETE HOLLOW BLOCK WALL

This is an ordinary question wherein some of the consultants are confident enough when asked by a client "which is cheaper to construct, a reinforced concrete wall or a concrete hollow block wall? The usual common answer is "the concrete hollow block wall sir." The next question is "How sure are you

that a CHB wall is cheaper than a reinforced concrete wall? The consultant without hesitation replied, I'm certain and sure for it is already a proven fact sir." The poor client with a laymans view has to believe whatever his consultant says, the recommendation is approved, construct the fire wall with a 15 cm. concrete hollow blocks.

Upon reaching home, the consultant felt so disturbed having assured his client of something that he has not proven for himself yet. He then sat down on his working table and made the computation of the following problem.

ILLUSTRATION 2-4

A fire wall has a general dimension of 40 meters long and 8 meters high specify the use of 15 cm. concrete hollow blocks with class "B" concrete mortar mixture. Prepare a comparative bill of materials for both CHB and a reinforced for the same wall.

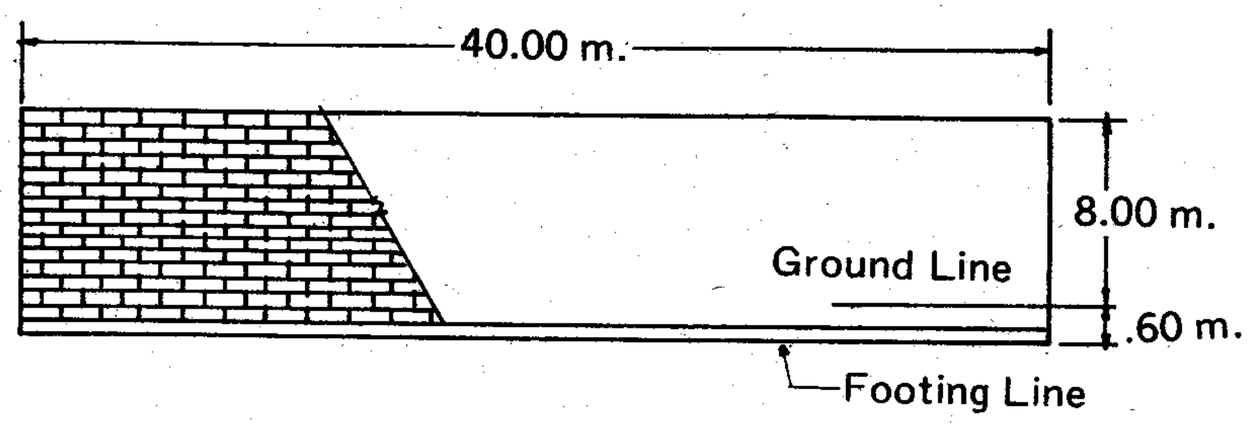

FIGURE 2-5a

Solution

A. For a 15 x 20 x 40 cm. CHB wall

1. Find the area of the wall

   A = 40 x 8
   A = 320 sq. m.

2. Referring to Table 2-2, multiply:

   320 x 12.5 = 4,000 pcs.

Cement Mortar

1. Referring to Table 2-2 using class "B" mixture 40 kg. cement
   Multiply:

   Cement : 320 x 1.013 = 324.2 say 325 bags
   Sand : 320 x .08438 = 27 cu. m.

Cement Plaster

1. Total area to be plastered

   320 x 2 faces = 640 sq. m.

2. Referring to Table 2-4 using class "B" mixture 40 kg. cement
   Multiply:

   Cement : 640 x .192 = 123 bags
   Sand : 640 x .016 = 10.2 cu. m.

Summary

Concrete Hollow Block 15 cm.	4,000	pcs.
Cement	448	bags
Sand	37.2	cu. m.

B. Reinforced Concrete Wall

1. Solve for the volume of the wall

   V = .15 x 8.00 x 40.00 m.
   V = 48 cu. m.

2. From Table 1-2 using class "B" concrete

   Multiply:

   Cement : 48 x 7.5 = 360 bags
   Sand : 48 x .5 = 24 cu. m.
   Gravel : 48 x 1.0 = 48 cu. m.

At this point of computation, the consultant stood up and prepared for a cup of coffee then return to his table and made the following Tabulation:

For CHB Wall				For Reinforced Concrete Wall			
15 cm. CHB	=	4,000 pcs.	P_____	Cement	=	360 bags	P_____
Cement	=	448 bags	P_____	Sand	=	24 cu. m.	P_____
Sand	=	38 cu .m.	P_____	Gravel	=	48 cu. m.	P_____
Total	=		P_____	Total	=		P_____

Analysis

1. For reinforcement size and spacing, what is acceptable to CHB wall is more acceptable to a solid concrete. The cost is even or the same.

2. For CHB wall, what is needed is lumber guide and scaffolding for the masons support in block laying. On the otherhand, the reinforced concrete wall requires forms, frames and braces.

3. If forms are used on reinforced concrete works, what is needed is ¼ or ½ of the entire area of the walls. Pouring of concrete could be done by sections.

4. If plywood form will be used, ½ of the wall area will require about 112 pieces plus the frame and braces of about 2,500 bd. ft. and about 20 kg. assorted nails.

5. The dismantled plywood forms and lumber frames could still be used on other structures, therefore, its entire value could not be considered as part of the cost of the concrete wall because it also served on other parts of the building. For depreciation of the forms, 25% of its value could be considered in the cost of the reinforced concrete wall.

6. Plastering of the reinforced concrete wall is minimal considering the fine finished surface of the concrete wall when plywood form is used.

7, In terms of strength and durability, reinforced concrete is preferred than the CHB.

8. Make canvass of the prices of the materials listed plus your good analysis, your choice and conclusion might as well agree or disagree with that of the consultant.

TABLE 2-5 QUANTITY OF CEMENT AND SAND PER 100 CHB MORTAR

CHB SIZE in cm.	CEMENT IN BAGS MXITURE						SAND in cu. m.
	40 kg. cement			50 kg. cement			
	B	C	D	B	C	D	
10 x 20 x 40	4.200	3.152	2.624	3.328	2.448	2.104	0.350
15 x 20 x 40	8.104	6.072	5.064	6.416	4.728	4.048	0.675
20 x 20 x 40	12.000	9.000	7.504	9.504	7.000	6.000	1.000

TABLE 2-6 QUANTITY OF CEMENT AND SAND PER 100 CHB PLASTER *

NO. OF FACE to be Plastered	CEMENT IN BAGS MIXTURE						SAND in cu. m.
	40 kg. cement			50 kg. cement			
	A	B	C	A	B	C	
One Face	2.304	1.536	1.152	1.856	1.216	0.896	0.128
Two Face	4.608	3.072	2.304	3.712	2.432	1.792	0.256

* *Plaster thickness: 16 mm average.*

Table 2-5 and 2-6 was presented to simplify further the estimating procedure in determining the quantity of the cement and sand required for CHB laying and plastering work. In this table, the cement and sand for mortar and plastering is determined per hundred pieces of CHB not by the square area method as previously presented.

ILLUSTRATION 2-5

From Figure 2-6 prepare the bill of materials using class "C" mixture.

SIMPLIFIED CONSTRUCTION ESTIMATE

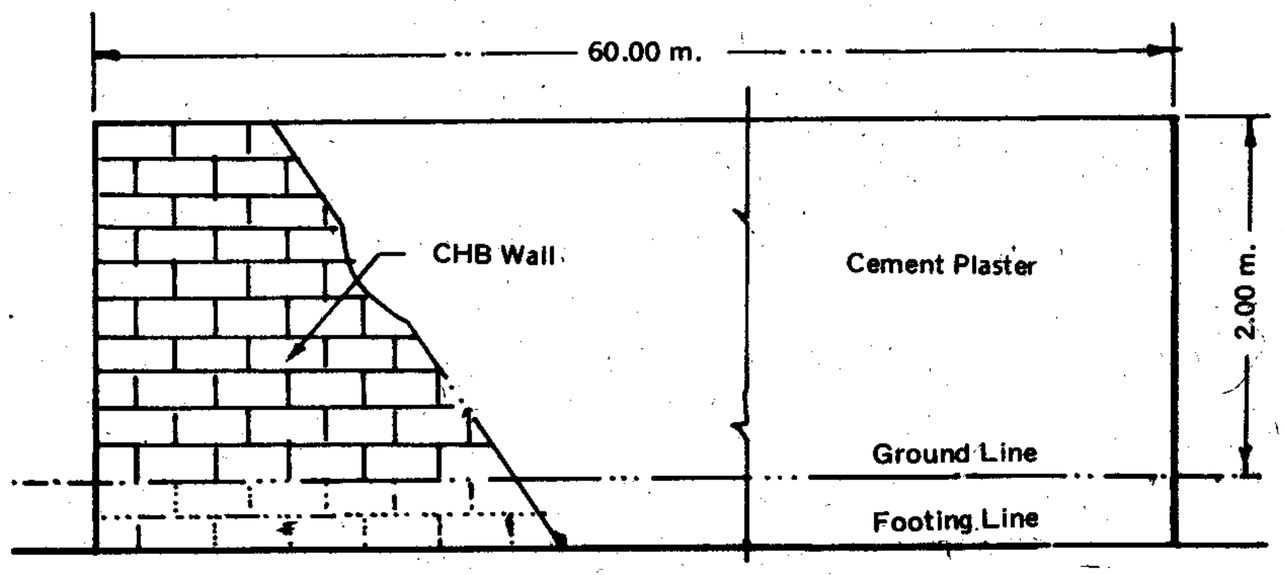

Solution

A. Concrete Hollow Blocks

1. Determine the area of the fence

   2.00 x 60 m. = 120 sq. m.

2. Referring to Table 2-2.

   Multiply:

   CHB: 120 x 12.5 = 1,500 pcs.

B. Cement Mortar

1. Divide 1,500 by 100 = 15

2. From Table 2-5

   Multiply:

   40 kg. Cement : 15 x 6.072 = 91 bags
   Sand : 15 x 0.675 = 10.125 cu. m.

C. Cement Plaster (One Face)

1. From Table 2-6

   Multiply:

   40 kg. Cement : 15 x 1.152 = 17.3 say 18 bags
   Sand : 15 x 0.128 = 1.92 say 2 cu. m.

2-3 SPECIAL TYPE OF CONCRETE HOLLOW BLOCKS

The common and ordinary type of concrete hollow blocks are those with three hollow cells as explained in Section 2-1. However, there are concrete hollow blocks which are specially designed for architectural and structural purposes manufactured by Jackbilt Concrete Products as presented in Figure 2-7. For our estimating aid Table 2-7 was prepared to simplify the preparation of the materials required for block laying such as the quantity of cement, sand and gravel.

The idea in manufacturing the concrete hollow blocks with two cells is to fill the hollow core with concrete not just by a mortar for reasons of strength and economy. This is how the special type of CHB differs from that of the ordinary CHB. The required quantity of gravel to fill the core was already incorporated in Table 2-7.

TABLE 2-7 QUANTITY OF CEMENT, SAND AND GRAVEL PER ONE HUNDRED BLOCKS

	MORTAR BLOCK LAYING: AND CONCRETE FILLER OF CORE:							
JACKBILT size in cm.	CEMENT IN BAGS Mixture 40 kg.			Mixture 50 kg.			SAND in cu. m.	GRAVEL in cu. m.
	B	C	D	A	B	C		
Two Core Stretcher Block	2.890	2.167	1.806	5.334	4.445	3.556	.537	.593
Single End Block	2.000	1.500	1.250	5.334	4.445	3.556	.463	.593
Beam Block	1.111	.833	.695	6.669	5.558	4.446	.463	.741
Half Block	.542	.406	.338	2.890	2.408	1.927	.206	.321
Beam Block	.820	.615	.512	4.104	3.420	2.736	.296	.456
L-Corner Block	.925	.694	.578	4.104	3.420	2.736	.305	.456
Half Block	.399	..299	.249	1.782	1.485	1.188	.132	.198
Half Block	1.146	.860	.716	-	-	-	.096	-

SIMPLIFIED CONSTRUCTION ESTIMATE

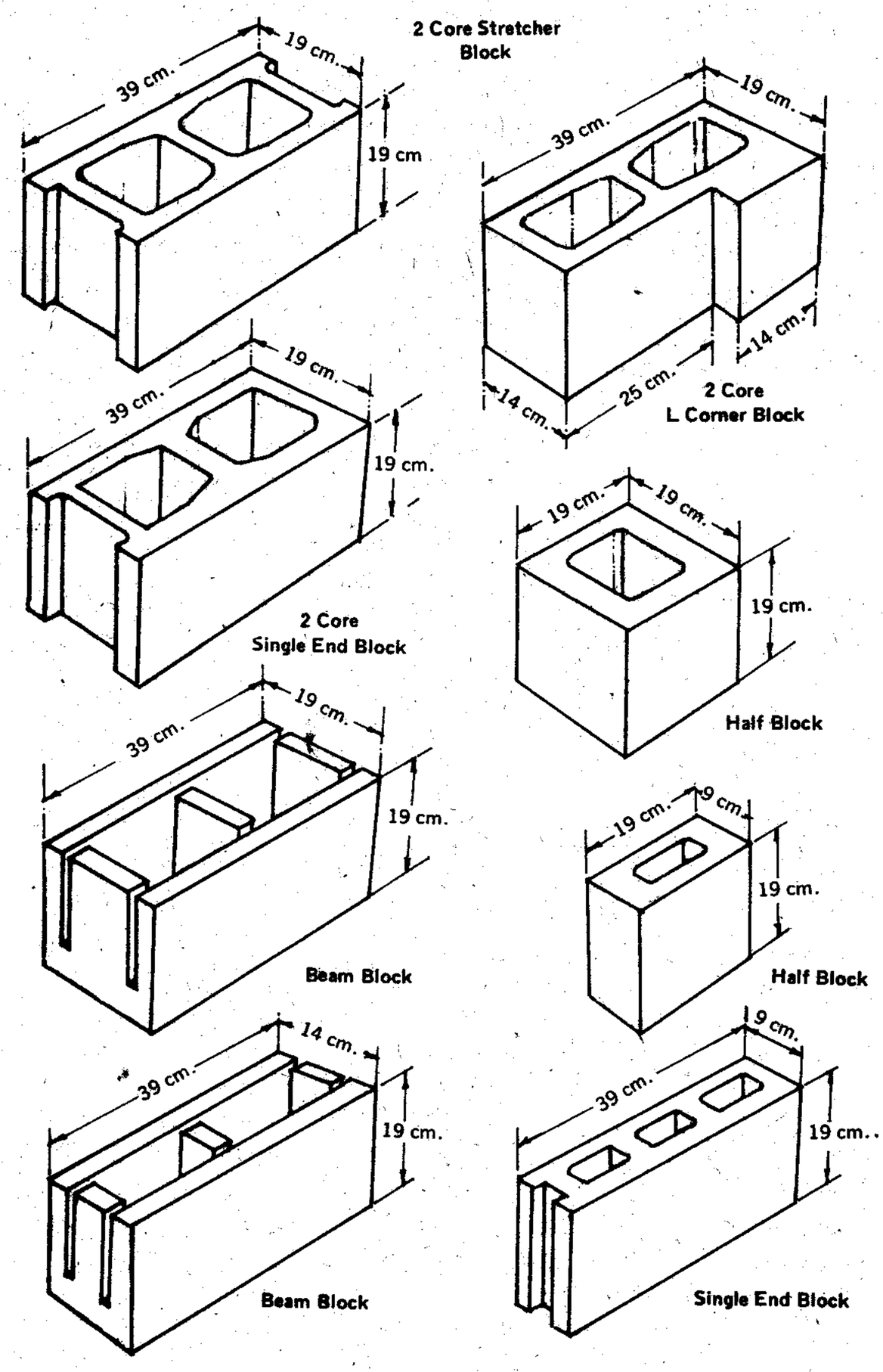

FIGURE 2-7

2-4 ADOBE STONE

Adobe Stone is ordinarily used as fencing materials as substitute to the concrete hollow blocks for economic reasons. Lately, the used of adobe stone was no longer limited to the ordinary zocalo and fencing work but also extensively used as finishing and decorative purposes for the exterior and interior of building structures.

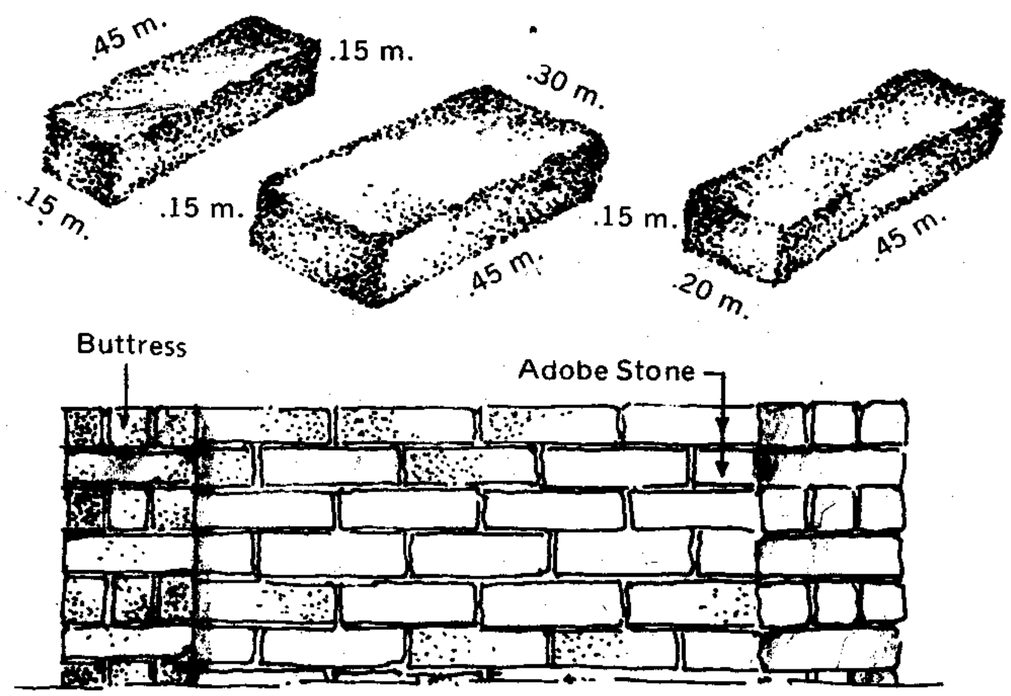

FIGURE 2-8

The use of adobe stone for buttresses, cross footings, fences and stairs minimizes the use of mortar filler as that of the concrete hollow block cells. Plastering is sometimes disregarded to avail of the natural texture of the stone.

TABLE 2-8 QUANTITY OF CEMENT AND SAND FOR ADOBE MORTAR PER SQ. M. (Average Thickness: 20 mm)

NUMBER per sq. m.	SIZE in cm.	CEMENT IN BAGS MIXTURE CLASS 40 kg. B	40 kg. C	40 kg. D	50 kg. B	50 kg. C	50 kg. D	SAND in cu. m.
12	15 x 15 x 45	.2808	.2106	.1756	.2220	.1638	.1404	.0234
10	15 x 20 x 45	.2520	.1890	.1575	.1995	.1470	.1260	.0210
11	15 x 30 x 30	.2280	.1708	.1423	.1803	.1328	.1139	.0190
8	15 x 30 x 40	.2079	.1559	.1299	.1646	.1213	.1040	.0173
6.5	15 x 30 x 45	.1901	.1426	.1188	.1505	.1109	.0951	.0158

TABLE 2-9 QUANTITY OF STONE, CEMENT AND SAND FOR BUTTRESSES AND FOOTINGS

BUTTRESS AND FOOTING			CEMENT MORTAR PER STONE CEMENT IN BAGS						
Cross Sect. of Buttress in cm.	Course	Number of Stone Per m. Ht.	40 kg. B	40 kg. C	40 kg. D	50 kg. B	50 kg. C	50 kg. D	SAND in cu. m.
30 x 45	2	12	.027	.0203	.017	.0214	.016	.014	.00225
45 x 45	3	18	.029	.0220	.018	.0230	.017	.015	.00244
45 x 60	4	24	.027	.0203	.017	.0214	.016	.014	.00225
45 x 75	5	30	.032	.0240	.020	.0250	.018	.016	.00263
45 x 95	6	36	.034	.0253	.021	.0270	.020	.017	.00281

TABLE 2-10 QUANTITY OF CEMENT AND SAND FOR PLASTERING PER SQUARE METER

SIDE	CEMENT 40 kg. B	40 kg. C	40 kg. D	50 kg. B	50 kg. C	50 kg. D	SAND in cu. m.
One Face	.300	.225	.188	.238	.175	.150	.025
Two Faces	.600	.450	.375	.476	.350	.300	.025

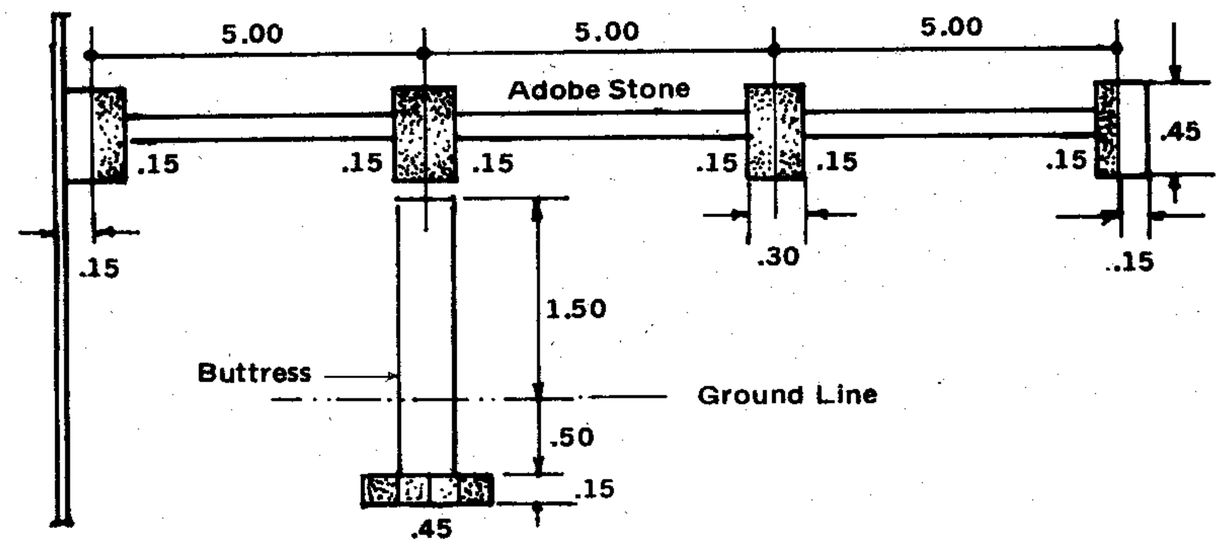

FIGURE 2-8a

ILLUSTRATION 2-6

From Figure 2-8a compute the quantity of adobe stone, cement and sand using class "C" mixture.

Solution

A. Adobe Stone Fence

1. Determine the net length of the fence minus the space occupied by the buttresses

   15.00 m. – (.30 x 3 post) = 14.1 m.

2. Solve for the net area

   14.10 m. x 2.00 m. ht. = 28.20 sq. m.

3. Referring to Table 2-8 using 15 x 15 x 45 cm. stone

   Multiply:
   28.20 x 12 = 338.4 say 339 pcs.

4. Total height of the four posts

   2.00 m. x 4 post = 8.00 m.

5. From Table 2-9 using 30 x 45 Buttress

   Multiply:

   8.00 m. x 12 pcs. per m. height = 96 pcs.

   Plus the adobe stone footing per buttress or post

   96 + (4 pcs. x 4 posts) = 112 pcs.

6. Determine the length of the fence less the area occupied by the buttress footing

   15.00 m.– (.45 x 3) = 13.65 m.

   Multiply by 6 stone per meter length

   13.65 m. x 6 = 81.9 say 82 pcs.

B. Cement Mortar

1. Wall fence area = 28.20 sq. m.
   Referring to Table 2-8 using class "C" mixture 40 kg. cement

   Multiply:

   Cement: 28.20 x .2106 = 5.939 bags
   Sand : 28.20 x .0234 = .6599 cu. m.

2. Buttress (post) and Footing - 112 pcs.
   Referring to Table 2-9 class "C" mixture 40 kg. cement

   Multiply:

   Cement: 112 x .02030 = 2.274 bags
   Sand : 112 x .00225 = .252 cu. m.

3. Fence Footing = 82 pcs.
   Referring to Table 2-9
   Multiply:
   Cement: 82 x .02030 = 1.665 bags
   Sand : 82 x .00225 = .1845 cu. m.

C. Cement Plaster: One Face

1. Determine the total surface area of the wall plus the surface area of the buttress to be plastered.

   (15.00 m. + .45 + (.15 x 8)
   = 16.65 m.

2. Solve for the area

   length x height
   = 16.65 m. x 1.50 m.
   = 24.975 sq. m.

   From Table 2-10, multiply
   Cement: 24.975 x .225 = 5.619 bags
   Sand : 24,975 x .025 = .624 cu. m.

3. Multiply the result by two if two sides are to be plastered.

   Cement: 5.619 x 2 = 11.238 bags
   Sand : .624 x 2 = 1.248 cu. m.

SUMMARY

Adobe Stone ----------	533 pcs.
Cement ----------	21.12 say 22 bags
Sand ----------	2.35 cu. m.

2-5 DECORATIVE CONCRETE BLOCKS

Decorative blocks are made out from either cement mortar or clay. These construction materials had been widely used for ventilation and decorative purposes. Although there are unlimited number of types and design available in the market, only few were presented to serve as a visual aid in this study of estimates.

Table 2-11 shows the number of blocks per square meter including the cement and sand for mortar per 100 blocks.

TABLE 2-11 QUANTITY OF DECORATIVE BLOCKS, CEMENT AND SAND FOR BLOCK LAYING MORTAR

SIZE in cm. t x h x l	NUMBER per sq. m.	40 kg. CEMENT per 100 BLOCKS MIXTURE CLASS		SAND per 100 blk.
		A	B	
6 x 12 x 19	38.5	.346	.230	.0192
10 x 14 x 19	33.3	.612	.408	.0340
10 x 14 x 23	27.8	.684	.456	.0380
10 x 24 x 24	16.0	.882	.588	.0490
10 x 14 x 39	16.7	.972	.648	.0540
10 x 19 x 39	12.5	1.062	.708	.0590

TABLE 2-12 QUANTITY OF CEMENT AND SAND FOR VARIOUS TYPES OF BRICKS AND STONE PER ONE HUNDRED BLOCKS

SIZE in cm.	PIECES per sq. m.	40 kg. CEMENT MORTAR (20 mm thick) MIXTURE		SAND in cu. m.
		A	B	
5 x 10	200	.180	.120	.010
5 x 15	133	.270	.180	.015
5 x 20	100	.360	.240	.020
5 x 25	80	.450	.300	.025
10 x 20	50	.720	.480	.040
10 x 25	40	.900	.600	.050
10 x 30	33	1.080	.720	.060

ITALIAN

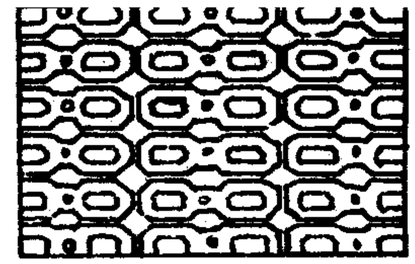

55 mm x 215 x 125 mm

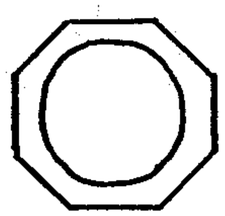

BOLIVIAN

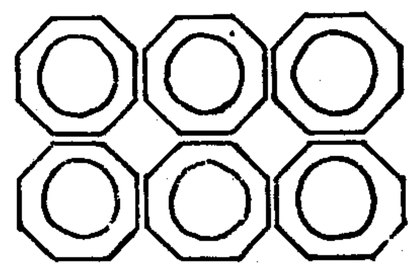

100 x 180 x 180 mm.

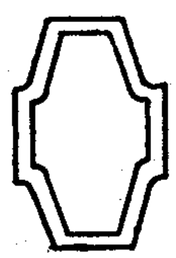

LUZ

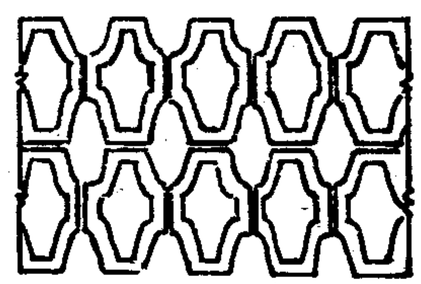

100 x 140 x 240 mm.

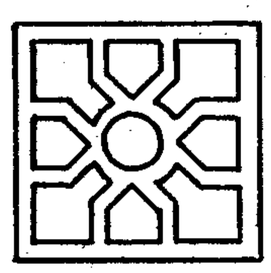

CORINTHIAN

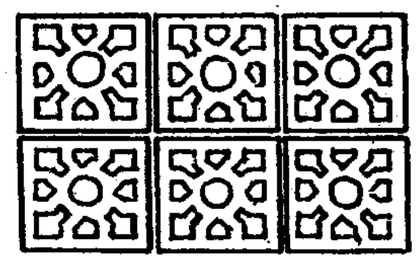

100 x 250 x 250 mm.

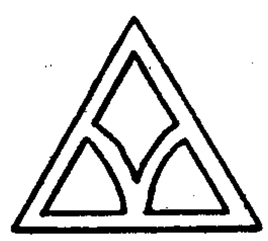

ROMAN

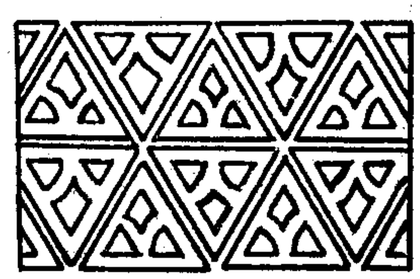

100 x 230 x 250 mm.

SIMPLIFIED CONSTRUCTION ESTIMATE

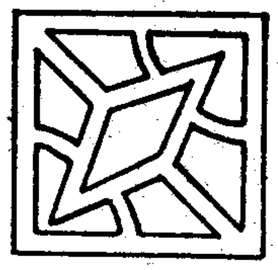

JOSEPHINE

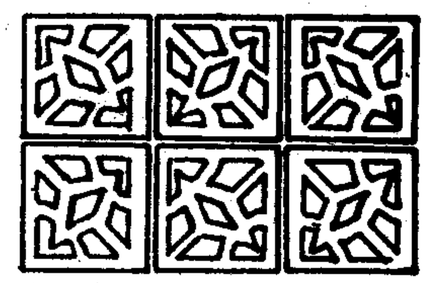

100 x 250 x 250 mm.

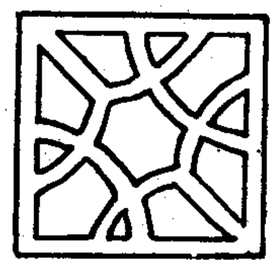

ASG

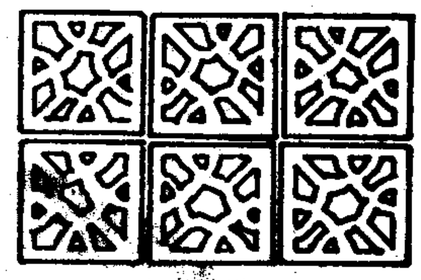

100 x 250 x 250 mm.

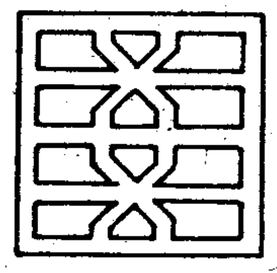

AUM

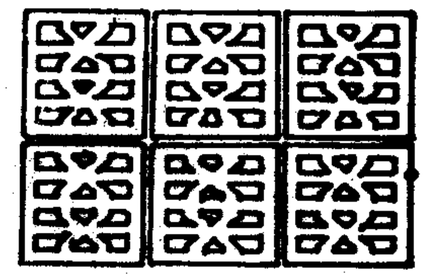

100 x 250 x 250 mm.

EGYPTIAN

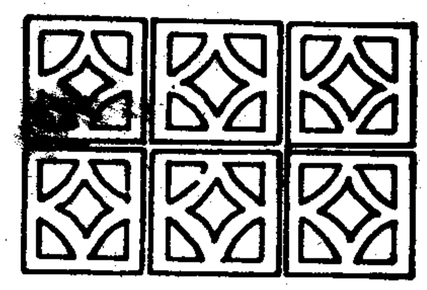

100 x 250 x 250 mm.

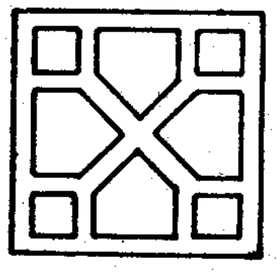

PERSIAN

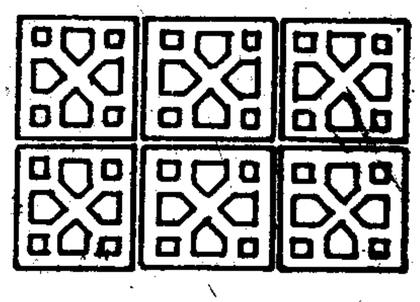

100 x 250 x 250 mm.

chapter 3

METAL REINFORCEMENT

3-1 STEEL REINFORCEMENT

Steel is the most widely used reinforcing material for almost all types of concrete construction. It is an excellent partner of concrete in resisting both tension and compression stresses. Comparatively, steel is ten times stronger than concrete in resisting compression load and hundred times stronger in tensile stresses.

The design of concrete assumes that concrete and steel reinforcement act together in resisting load and likewise to be in the state of simultaneous deformation, otherwise, the steel bars might slip from the concrete in the absence of sufficient bond due to excessive load.

In order to provide a high degree of sufficient bond between the two materials, steel reinforcing bars with a surface deformation in various design were introduced.

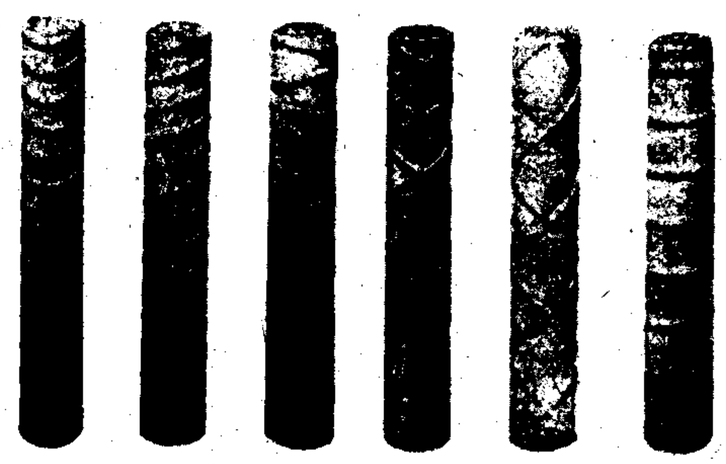

Types of Deformed Bars
FIGURE 3-1

TABLE 3-1 STANDARD WEIGHT OF PLAIN OR DEFORMED ROUND STEEL BARS

			(in kgs)				
SIZE	5.0 m	6.0 m	7.5 m	9.0 m	10.5 m	12.0 m	13.5 m
8 mmϕ	1.98	2.37	2.96	3.56	4.15	4.74	5.33
10 mmϕ	3.08	3.70	4.62	5.54	6.47	7.39	8.32
12 mmϕ	4.44	5.33	6.66	7.99	9.32	10.66	11.99
13 mmϕ	5.21	6.25	7.83	9.38	10.94	12.50	14.07
16 mmϕ	7.90	9.47	11.84	14.21	16.58	18.95	21.32
20 mmϕ	12.33	14.80	18.50	22.19	25.89	29.59	33.29
25 mmϕ	19.27	23.12	28.90	34.68	40.46	46.24	52.02
28 mmϕ	24.17	29.00	36.25	43.50	50.75	58.00	65.25
30 mmϕ	27.75	33.29	41.62	49.94	58.26	66.59	74.91
32 mmϕ	31.57	37.88	47.35	56.82	66.29	75.76	85.23
36 mmϕ	39.96	47.95	59.93	71.92	83.91	95.89	107.88

DEFORMATION REQUIREMENTS

unit: mm

Nominal Diameter	Max. Average Spacing of Lugs	Height Minimum	Tolerance Maximum	Max. Value Summation of Gaps of Lugs
8	7.0	0.3	0.6	5.5
10	7.0	0.4	0.8	7.8
12	8.4	0.5	1.0	9.4
13	9.1	0.6	1.2	10.2
16	11.2	0.7	1.4	12.6
20	14.0	1.0	2.0	15.7
25	17.5	1.2	2.4	19.6
28	19.6	1.4	2.8	22.0
30	21.0	1.5	3.0	23.6
32	22.4	1.6	3.2	25.1
36	24.5	1.8	3.6	27.5

MECHANICAL PROPERTIES

Class	Grade	Yield Strength MPa, min.	Tensile Strength MPa, min.	Specimen	Elongation in 200 mm, percent, min.	Bending Angle, Degree	Diameter of Pin (d = nominal diameter of specimen)
Hot Rolled Non-Weldable Deformed Steel Bar	230	230	390	D < 25 mm D ≥ 25 mm	18 16	180	3d 4d
	275	275	480	D < 25 mm D ≥ 25 mm	10 8	180	4d 5d
	415	415	620	D < 25 mm D ≥ 25 mm	8 7	180	5d 6d
Hot-Rolled Weldable Deformed or Plain Steel Bar	230	230	390	D < 25 mm D > 25 mm	20 18	180	3d 4d
	275	275	480	D < 25 mm D > 25 mm	16 14	180	4d 5d
	415	415	550	D < 25 mm D > 25 mm	14 12	180	5d 6d

3-2 IDENTIFICATION OF STEEL BARS

Steel reinforcing bars are provided with distinctive markings which identify the name of the manufacturer with it's initial and the bar size number including the type of steel bars such as:

N = For Billet
A = For Axle
Rail Sign = For Rail Steel

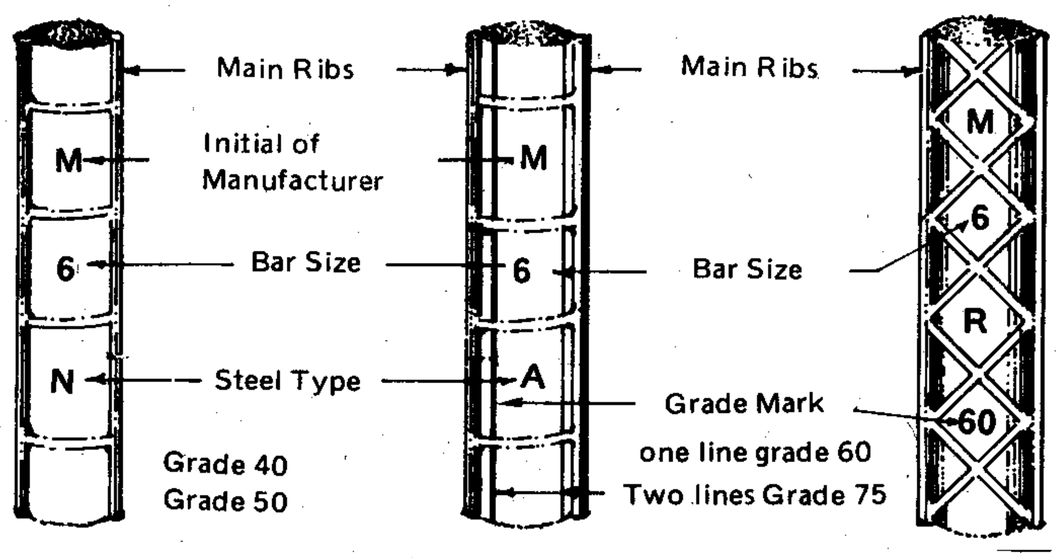

Marking System
FIGURE 3-2

3-3 BAR SPLICE, HOOK AND BEND

In estimating the quantity of the steel reinforcing bars, one has to consider the additional length for the hook, the bend and the splice whose length varies depending upon the limitation as provided for by the National Building Code.

Types of Reinforcement	Minimum Splice Length
1. Tension Bars	= 25 x Bar Size + 150 mm.
2. Compression Bars	= 20 x Bar Size + 150 mm.

Illustration 3-1

Determine the length of the splice for a 16 mm. tensile reinforcement of a beam.

Solution

1. Classification of the reinforcement is under tension
2. Multiply:

   25 x 16 mm + 150 mm. = 550 mm.

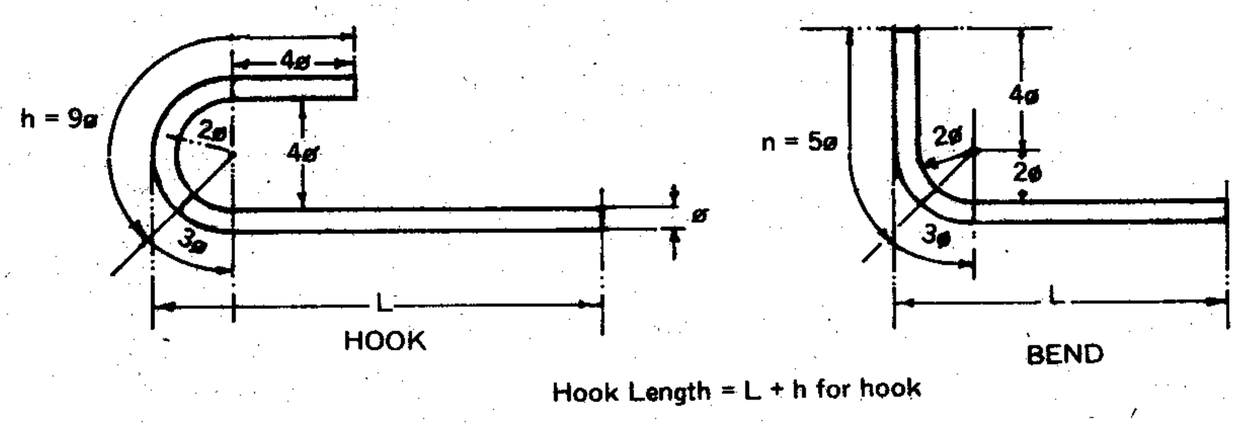

Hook Length = L + h for hook

Mild Steel Minimum Hook and Bend Allowance

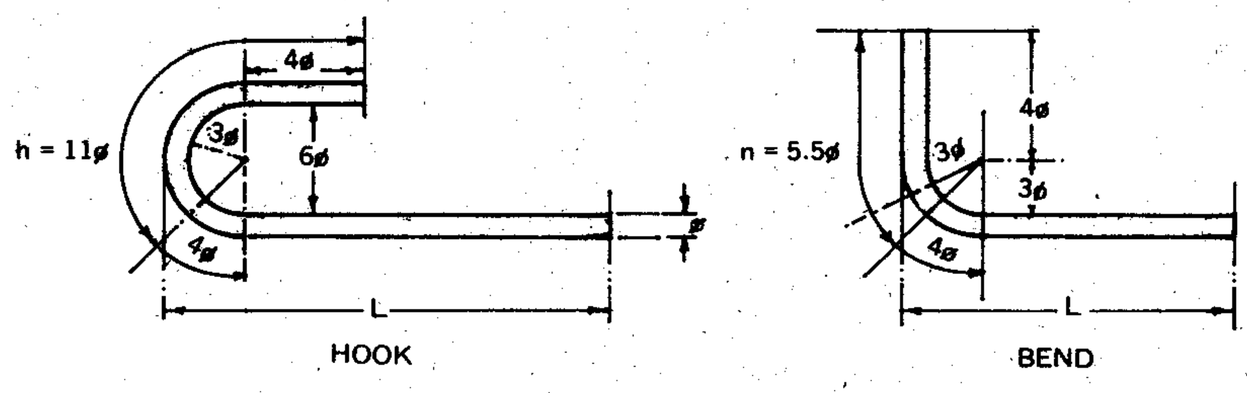

Hook lenght = L + n for bend

High Yield Bars Minimum Hook and Bend Allowance

FIGURE 3-3

METAL REINFORCEMENT

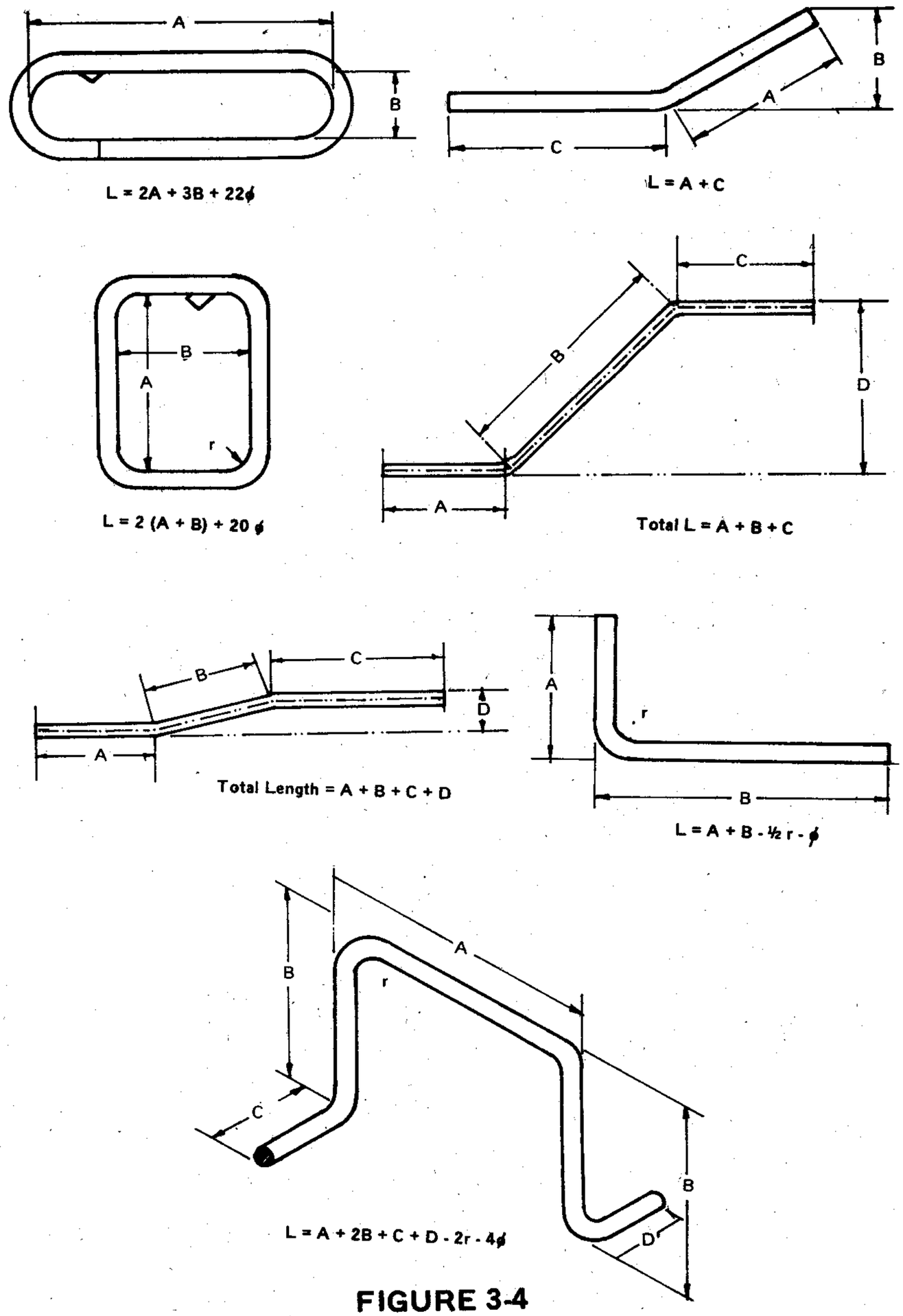

FIGURE 3-4

SIMPLIFIED CONSTRUCTION ESTIMATE

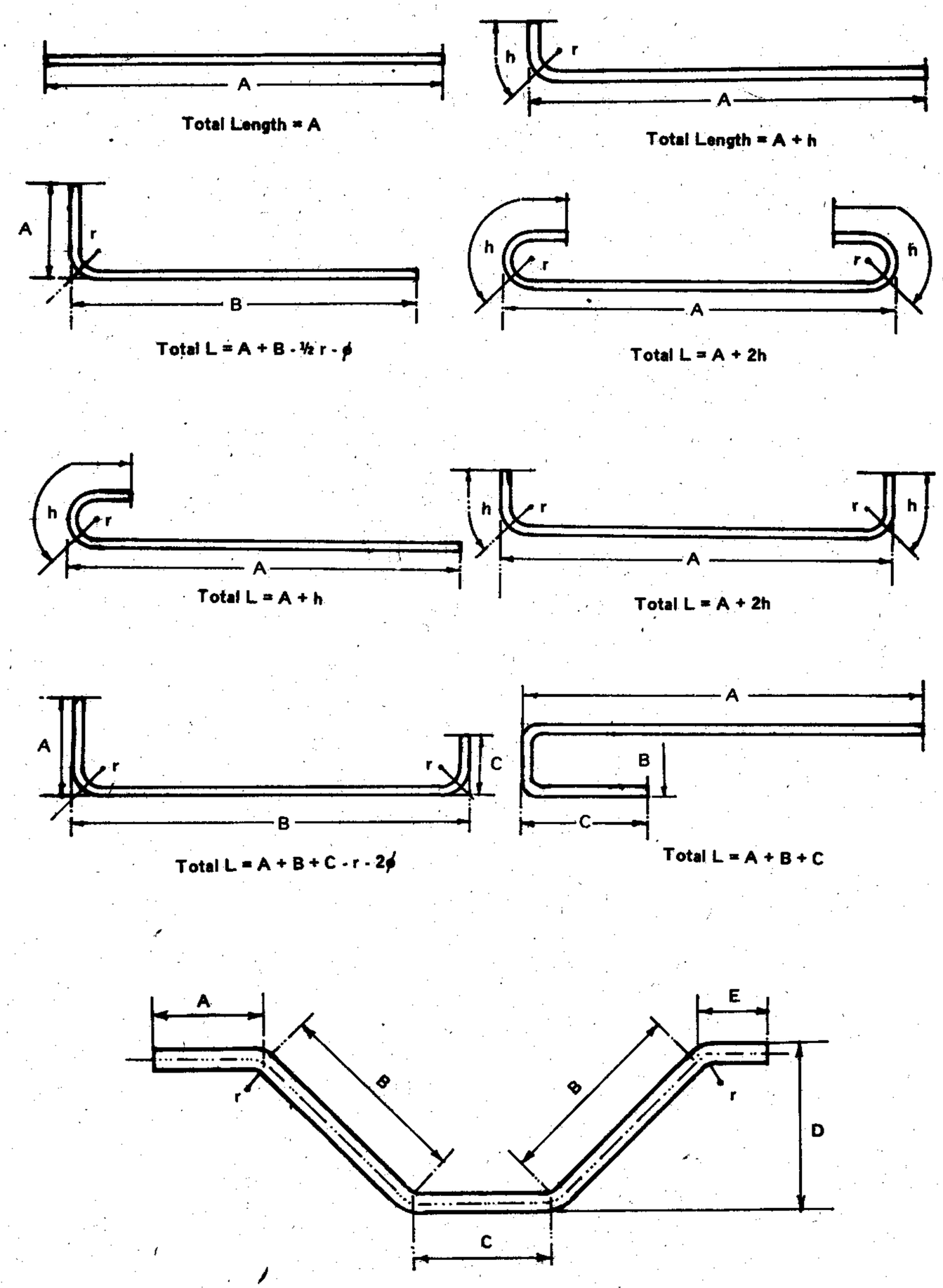

FIGURE 3-5

The size of the steel reinforcement and its quantity is one item of the construction which is quite difficult and complicated to determine. Difficult in the sense that it requires patience and deeper analysis in computing the actual number of bars required to be used in every part of the structures. Estimating is done in a systematic approach, that is by computing the quantity of each member one at a time, item by item then summarized the results according to its size and quantity in conformity with the commercial length of steel bars to avoid excesses and unnecessary cutting. Ordering materials that is more than what is actually needed in the construction will only invite pilferages and encourage wreckless cutting which is in effect contributory to the construction waste.

Estimating the quantity of the steel reinforcement, refers to the commercial length of steel bars to be ordered as a summary of all the cut bars intended for the different member of the structures. Under such condition the following problems has to be anticipated.

1. For main reinforcement of post, columns, beams, girders and the like, is determined by the "Direct Counting Method" wherein the additional length for hook, bend or lapping joints are often overlooked.

2. For other structural member such as lateral ties, stirrups, spirals, dowels, cut bars and the like should be treated separately and carefully determine the length of their cuts including the allowances for hook and bend.

3. After knowing the length of the lateral ties, stirrups, etc. the next problem is how to select the steel bars to be ordered from the various commercial length of

5.00 meters to 13.50 meters avoiding extra cuts which might be classified as junk unless they could be of service or used on other structural members.

4. Tie wire for reinforcement joints is a big item of a large construction work considering its cost. The cutting length of each tie wire should be to the minimum required based from the diameter of the bars to be tied.

TABLE 3-3 AREAS OF GROUPS OF REINFORCING BARS

BAR diam. (mm)	NUMBER OF BARS $(mm)^2$									
	1	2	3	4	5	6	7	8	9	10
6	28	57	85	113	141	170	198	226	254	283
8	50	101	151	201	251	302	352	402	452	503
10	79	157	236	314	393	471	550	628	707	785
12	113	226	339	452	565	679	792	905	1017	1131
16	201	402	603	804	1005	1206	1407	1608	1809	2011
20	314	628	942	1257	1571	1885	2199	2513	2827	3142
25	491	982	1473	1963	2454	2945	3436	3927	4418	4909
32	804	1608	2412	3216	4021	4825	5629	6433	7237	8042
40	1256	2513	3769	5026	6283	7539	8796	1005	1131	1257

3-4 CONCRETE HOLLOW BLOCKS REINFORCEMENT

In our previous discussions of Masonry in Chapter 2, the concrete hollow block work had been thoroughly discussed giving emphasis on how to determine the quantity of the blocks, cement, sand and gravel except the steel reinforcement which is necessary to complete the work. The size and spacing of the CHB reinforcement depends upon the plan and specifications which is the basis of the estimate. The number of steel bars required could be determined in three ways:

1. By the Direct Counting Method
2. By the Unit CHB Method
3. By the Area Method

The Direct Counting Method could be done by counting directly the number of vertical and horizontal bars plus the lapping, hook and bend from a detailed plan. But, how many plans have presented a detailed drawing for steel reinforcement?

The Area and Unit CHB Method - This is the simplest method of computing the steel reinforcement for CHB with the aid of Table 3-4 wherein the values presented includes the allowances for splice and bend.

TABLE 3-4 LENGTH OF STEEL REINFORCEMENT FOR CONCRETE HOLLOW BLOCK WORK

VERTICAL REINFORCEMENT			HORIZONTAL REINFORCEMENT		
Spacing in cm.	Length of Bars in Meter Per Block	Per Sq. M.	Spacing in Layers	Length of Bars in meter Per Block	Per Sq. M.
.40	0.235	2.93	2	0.264	3.30
.60	0.171	2.13	3	0.172	2.15
.80	0.128	1.60	4	0.138	1.72

Illustration 3-2

From Figure 3-6 determine the number of 10 cm. CHB, and the vertical reinforcing bars spaced at 80 cm. on center including the horizontal bars at every after three layers.

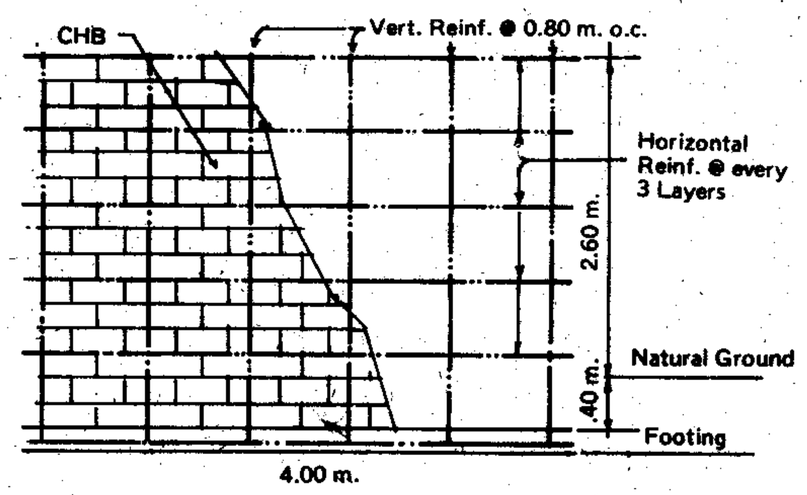

FIGURE 3-6

1st Solution

1. Solve for the area of the fence

   A = length x height
   A = 4.00 x 3.00
   A = 12 sq. m.

2. Vertical reinforcement at 80 cm. o.c.
   Referring to Table 3-4 by the square meter or area method.
   Multiply:
   12 x 1.60 = 19.2 meters

Convert this value to the commercial length of steel bars ranging from 5.00 to 13.50 meters. Select the most economical length avoiding extra cut.

Select: 4 pcs. 10 mm. x 5.00 m. long

3. Horizontal bars at every after 3 layers
   From Table 3-4, multiply:
   12 x 2.15 = 25.80 meters.
   Select: 4 pcs @ 5.00 m. and 1 - @ 6.00 m. long

4. Order: 8 pcs. 10 mm x 5.00 m. Steel bars
   1 - 10 mm x 6.00 m. Steel bars

2nd Solution

1. Solve for the area of the fence

   A = 4 x 3.00
   A = 12 sq.m.

2. Determine the number of CHB

   12 x 12.5 = 150 pcs.

3. Referring to Table 3-4

   a) Vertical Reinforcement per Block
      @ .80 m. o.c.

      Multiply:

      150 x 0.128 = 19.2 meters
      Select: 4 pcs 10 mm x 5.00 m. long

   b) Horizontal bars for every after 3 layers
      Referring to Table 3-4, multiply

      150 x 0.172 = 25.8 m.

   c) Convert to commercial length
      Select:

      4 pcs. 10 mm x 5.00 and 1 @ 6.00 m. long

4. Order: 8 pcs 10 mm x 5.00 m. and
   1 - 10 mm x 6.00 m. Steel bars

3-5 TIE WIRE FOR STEEL REINFORCEMENT

Gauge number 16 galvanized wire is commonly used as tie wire for steel bar intersections and splicing joints. The length of each tie wire depends upon the size of the bars to be tied on. Tie wire is one item of the construction which is always included in the bill of materials without the support of computations, its quantity is mostly determined by the estimator through mere calculations which is somewhat alright for a small work but not for a large construction involving multiple floors. The imaginary estimate for tie wire will never give a satisfactory result.

CHB Reinforcement Tie Wire - The common size of steel reinforcement for concrete hollow blocks are either 10 mm, 12 mm or 13 mm depending upon the plan and specifications. For those particular size of reinforcement, a 25 cm. or 30 cm. long tie wire folded at the center will be satisfactory.

TABLE 3-5 KILOGRAM OF NO. 16 TIE WIRE OF CONCRETE HOLLOW BLOCKS REINFORCEMENT

VERTICAL SPACING in cm.	HORIZONTAL SPACING in layer	KILOGRAM PER 100 BLOCKS 25 cm. ties	30 cm. ties
40	2	.0042	.0051
40	3	.0031	.0038
40	4	.0028	.0033
60	2	.0028	.0034
60	3	.0021	.0025
60	4	.0018	.0022
80	2	.0021	.0025
80	3	.0016	.0019
80	4	.0014	.0017

Illustration 3-3

Continuing the solution of illustration 3-1 from the following data obtained.

Vertical Reinforcement spacing = 80 cm.
Horizontal Reinforcement spacing every 3 layers
Area of the wall = 12 sq. m.

Solution

1. Determine the number of CHB
   12 x 12.5 = 150 pcs.

2. Using a 25 cm. tie wire from Table 3-5
   Multiply:
   Tie Wire: 150 x .0016 = .24 kilos

3-6 INDEPENDENT FOOTING REINFORCEMENT

In estimating for the reinforcement of an independent or isolated footing, the following rules has to be observed:

1. Know the actual dimension of the footing as to its length and width.

2. Remember that the minimum underground protective covering of concrete to the steel reinforcement is 7.5 cm.

3. If the plan does not call for a hook or bend of the footing reinforcement, the length of the bar is equal to the length or width of the footing minus the protective covering at both ends.

4. If the plan calls for a hook or bend of the reinforcement the bar-cut should include the allowance for hook and bend as presented in Figure 3-4 and 3-5.

5. Know the spacing distance of the steel bars both ways to determine the exact number required, then as much as possible select the appropriate steel bar length which is divisible by the cut length avoiding unwanted extra cuts.

Various problems in computing for the steel reinforcement will be encountered as measurement and design varies. Problems are usually met on reinforcing member which requires cutting and bending. Others could be determined by the Direct Counting Method.

Illustration 3-4

From Figure 3-7, determine the number of 12 mm steel bars required if there are 6 footing with a general dimension of 1.50 x 1.50 meters.

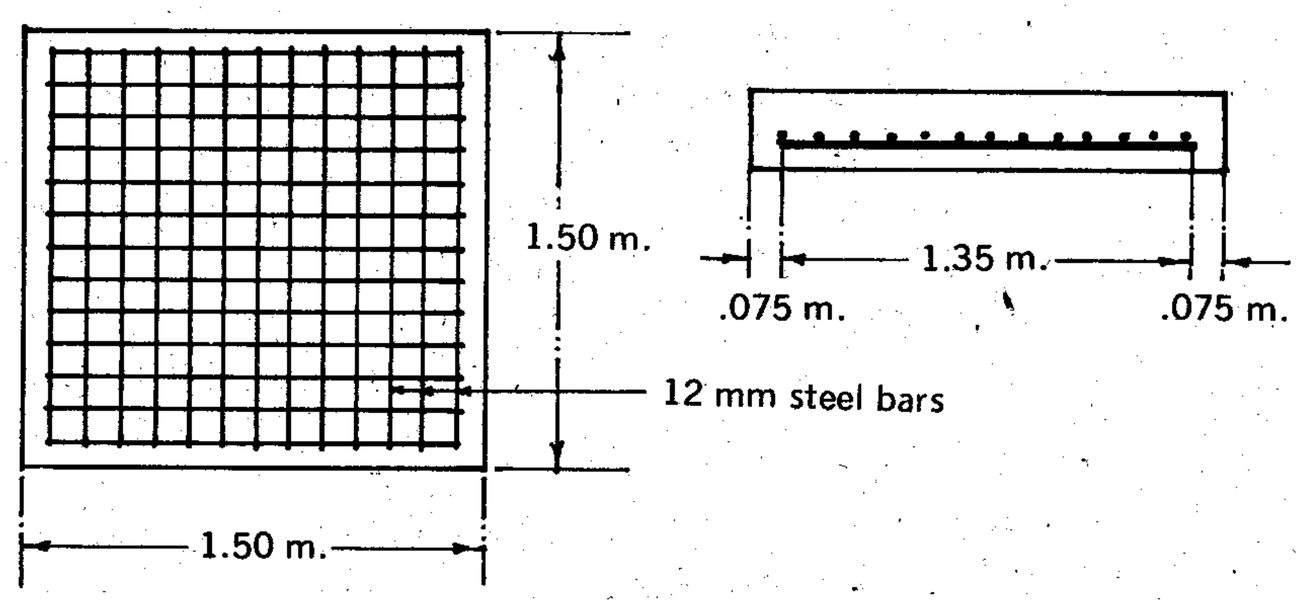

FIGURE 3-7

Solution

1. The net length of one bar is,

$$1.50 - (.075 + .075) = 1.35 \text{ m.}$$

2. Find the total number of cut bars in one footing by Direct Counting

$$13 \times 2 = 26 \text{ pcs.}$$

3. Get the total number of bars for the 6 footings

$$26 \times 6 = 156 \text{ pcs. @ } 1.35 \text{ m. long}$$

4. Select the steel bars whose length is economically cut into 1.35 m. long

$$\frac{6.00 \text{ m.}}{1.35} = 4.44 \text{ pcs.}$$

The fractional value of .44 is inevitable but should not be included in the computation because it is less than one cut bar length, use the whole value of 4.0

5. Divide the result of step 3 by 4.0

$$\frac{156}{4.0} = 39 \text{ pcs. of } 12 \text{ mm} \times 6.00 \text{ m.}$$

The common error committed in estimating the number of steel bars is presented below.

Using the same data

1. The net length of one bar is 1.35 m.

2. The total number of bars in one footing is

$$13 \times 2 = 26 \text{ pcs.}$$

3. Total number of bars for 6 footings

$$26 \times 6 = 156 \text{ pcs.}$$

4. The total length of the bars in meter

$$156 \times 1.35 = 210.6 \text{ m.}$$

5. Converting this to steel bar length

$$\frac{210.6}{6.00} = 35 \text{ pcs. steel bars}$$

Analysis:

Comparing the result of the two estimating procedures, the answers has a difference of 4 pieces steel bars at 6.00 meters long. This is the result by including the fractional amount of .44 as divisor of the reinforcing bar length.

The second procedure could be correct if the quotient in dividing the length of one bar by the length of one cut bar yields a whole value, on the contrary, if the result has a fractional amount, the second procedure will not give a correct answer.

The following illustration is an example where the second procedure applies.

Illustration 3-5

From Figure 3-8, determine the number of 12 mm steel bars and the tie wire in kilogram if there are 20 pcs. independent square footing with a general dimension of 1.15 x 1.15 meters.

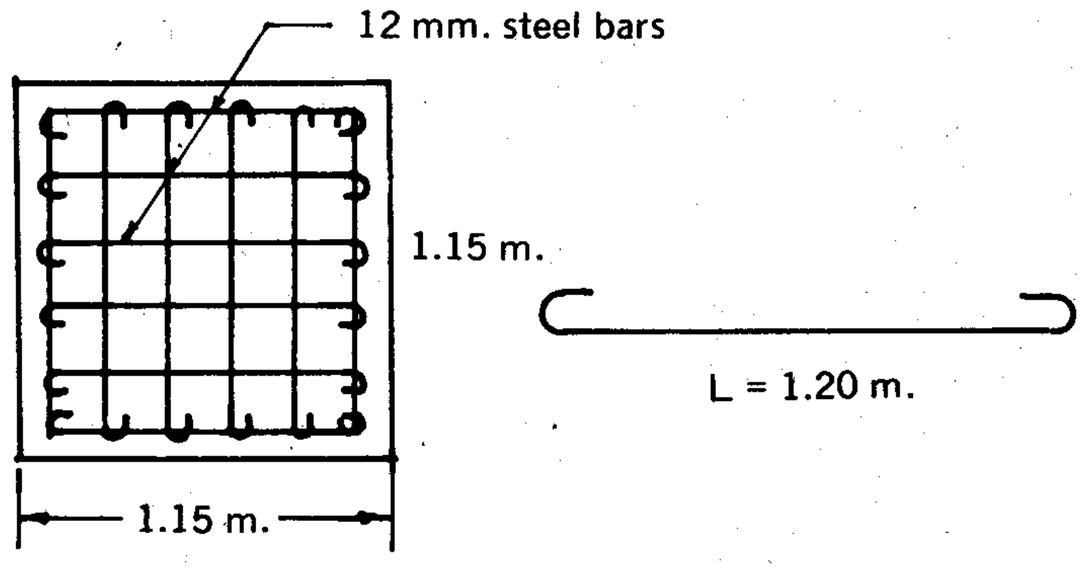

FIGURE 3-8

Solution

1. Determine the net length of one reinforcing cut-bar

   1.00 m. + .20 m. = 1.20 m.

2. Total cut-bars in one footing

   6 x 2 = 12 pcs.

3. Total cut-bars for 20 footings

   12 x 20 = 240 pcs.

4. Total length of all the bars

   240 x 1.20 = 288 meters

5. Divide the above result by the length of one steel bar say 6.00 meters.

$$\frac{2.88}{6.00} = 48 \text{ pcs.}$$

Order: 48 pcs. of 12 mm x 6.00 m. steel bars

Solving the same problem by the 1st procedure:

1. Net length of one reinforcing bar = 1.20 m.

2. Total bars in one footing

   6 x 2 = 12 pcs.

3. Total for 20 footings

   12 x 20 = 240 pcs.

4. Divide one steel bar by the length of one cut bar

$$\frac{6.00}{1.20} = 5 \text{ pcs.}$$

This simply means that 5 pcs. at 1.20 meter long reinforcing bar could be taken from a 6.00 meters long steel bar, then,

5. Divide the total cut bars for 20 footings by 5

$$\frac{240}{5} = 48 \text{ pieces}$$

The question now is when to use the first procedure and when to adopt the second procedure. In determining alone what procedure to adopt is an additional burden, to avoid such confusion, the following rules will help in making the right choice.

1. Determine the net length of one reinforcing bar

2. Divide 6.00 m. or any commercial length steel bar by the result of step 1

3. If the result is a whole number (exact value) use the second procedure

4. If the result is a fractional value, adopt the first procedure.

Considering illustration 3-5, Tie Wire could be determined under the following steps:

1. Find the number of bar intersections in one footing
   6 x 6 = 36 ties

2. Total Ties for 20 footings
   20 x 36 = 720 ties

3. Using 25 cm. length per tie
   Multiply:
   720 x .25 m. = 180 meters

4. One kilo of No. 16 G.I. wire is approximately 53 meters long
   Divide:

$$\frac{180}{53} = 3.4 \text{ kilos}$$

3-7 POST AND COLUMN REINFORCEMENT

The reinforcement of posts and columns to be considered in the estimates are:

1. The Main or Vertical Reinforcement
2. The Lateral Ties or
3. The Spiral Ties for Circular Column

The quantity and length of the main reinforcement is determined by the "Direct Counting Method" giving special attention to the additional length for:

1. Lap-Joints of end splices
2. Allowance for bending and hook
3. Additional length for the beam depth and floor thickness if the height of the building plan indicates from floor to floor.

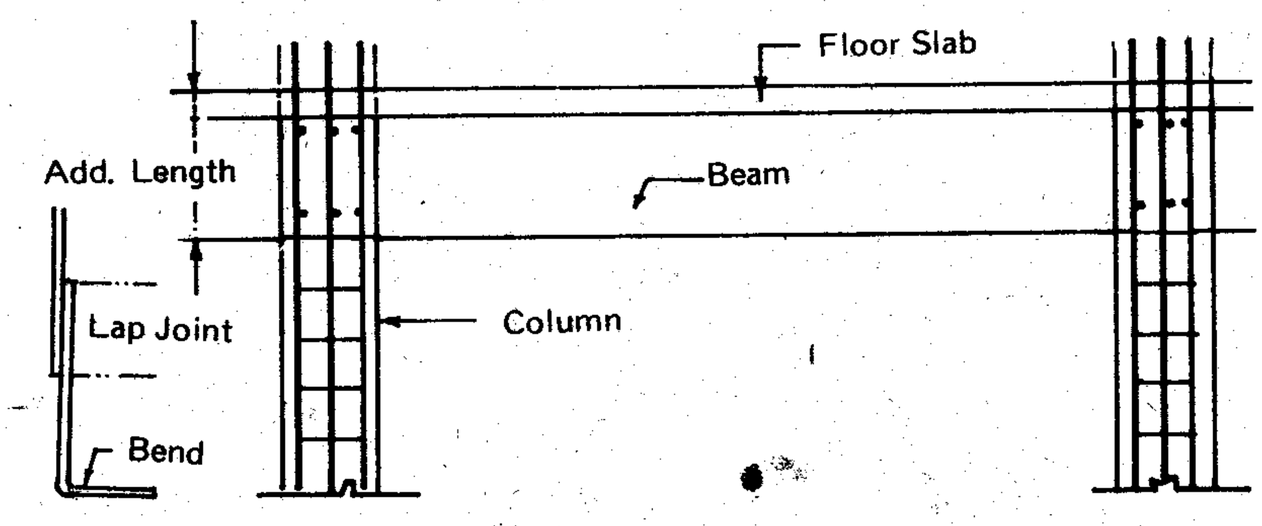

FIGURE 3-9

3-8 BEAMS AND GIRDERS REINFORCEMENT

The "Direct Counting Method" is the best method in determining the main reinforcement for beams and girders. Provided that in the selection of the length of steel bars, the following physical condition of the beam in relation with it s support should be considered.

1. Verify from the plan if the span of the column where the beam is to rest measures from center to center, outer to center or outer to outer side of the column. This has to be considered in determining the length of steel bars to be ordered.

2. Verify the position of the reinforcement splicing if it is adjusted to the commercial length of steel bars. "The lesser the splice the lesser the expense."

3. Identify the bars with bend and hook, for adjustment of their length in ordering the steel bars.

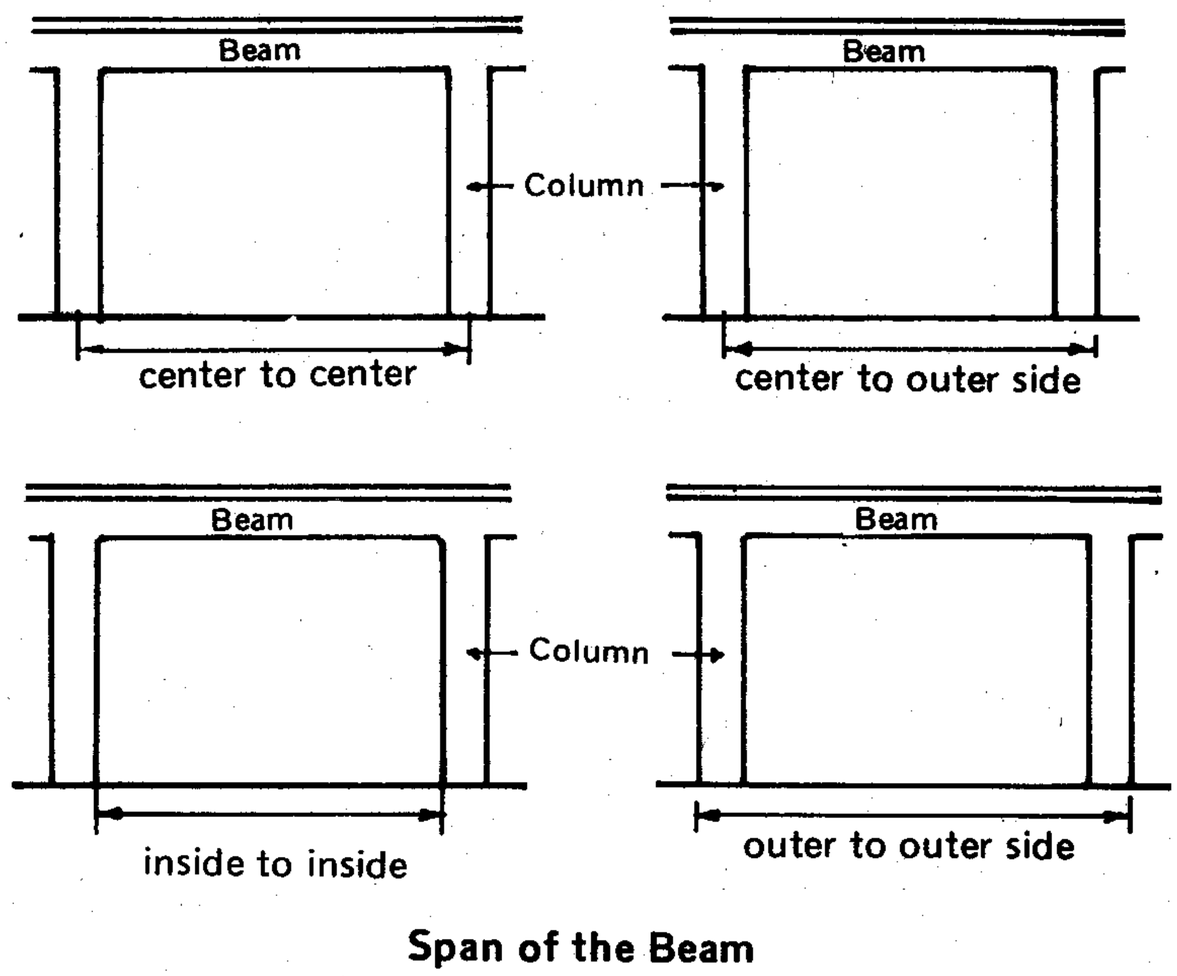

FIGURE 3-10

3-9 LATERAL TIES

Tied column has reinforcement consisting of vertical bars held in a position by lateral reinforcement called **lateral ties.**

The ACI Code so provides:

> *"All non-prestressed bars for tied column shall be enclosed by lateral ties of at least No. 3 in size for longitudinal bars No. 10 or smaller and at least No. 4 in size for No. 11 to 18 and bundled longitudinal bars."*

The spacing of the ties shall not exceed:

1. 16 x the longitudinal bar diameter
2. 48 x lateral tie bar diameter or
3. The least dimension of the column

Illustration 3-6

Determine the spacing of the lateral tie for a tied column as shown in Figure 3-11.

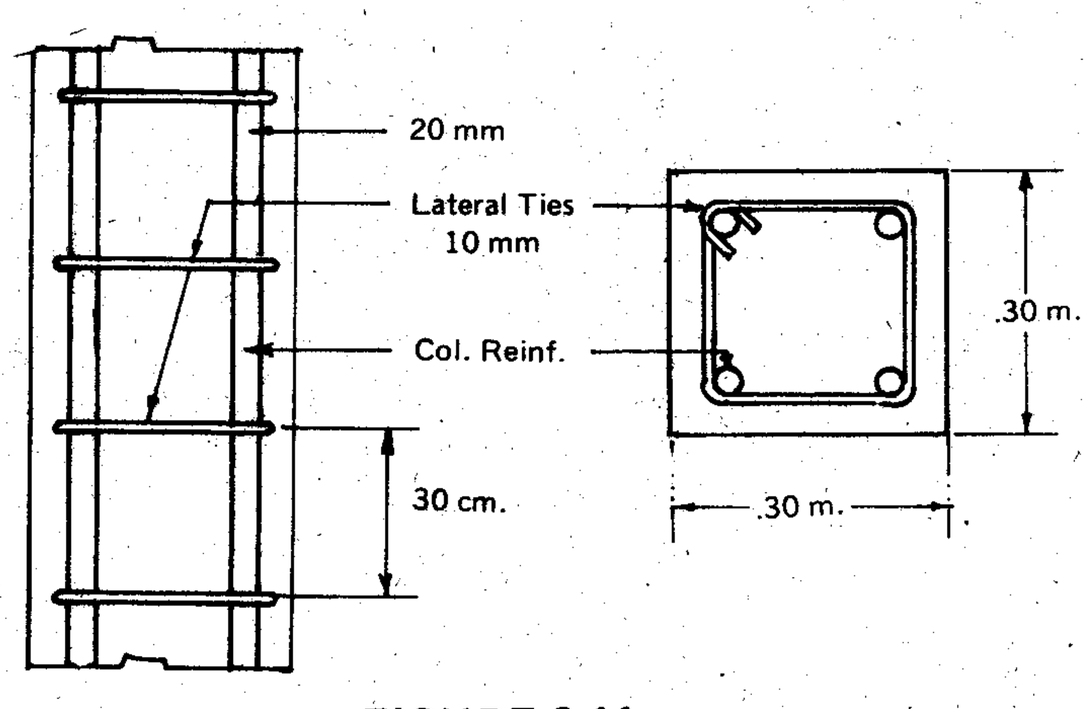

FIGURE 3-11

Solution

1. Diameter of the main longitudinal bar = 20 mm.

2. Diameter of the lateral ties = 10 mm.

3. Multiply:
   16 x 20 = 320 mm.
   48 x 10 = 480 mm.

   Shortest side of the column = 300 mm.

4. Adopt 300 mm. or 30 cm. spacing

Illustration 3-7

A building has a series of 26 square columns having a cross-sectional dimension of 30 x 30 cm. with 8 pieces 20 mm. vertical reinforcing bars for each column. Make an order of 10 mm steel bars required for making the lateral ties.

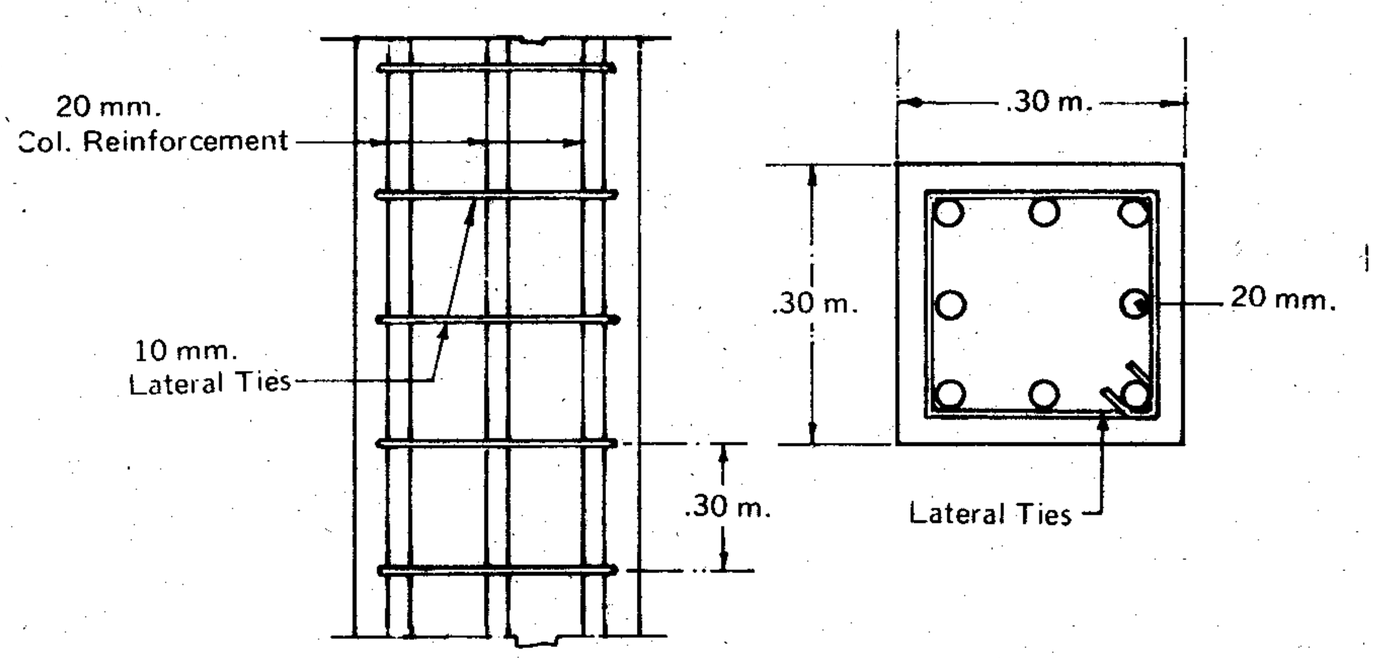

FIGURE 3-12

Solution

1. Determine the spacing of the lateral ties.

   16 x 20 mm. = 320 mm. or 32 cm.
   48 x 10 mm. = 480 mm. or 48 cm.

   The shortest side of the column is = 30 cm.

2. Adopt the 30 cm. spacing

3. Determine the number of lateral ties in one column

$$\frac{7.00 \text{ m. ht.}}{.30} = 23.3 \text{ pcs.}$$

4. The 23 pcs. is the distance between the lateral ties, what we need is the number of ties in one column, so, we add one to be exact.

   23 + 1 = 24 pcs.

5. Solve for the total ties of the 26 columns.

   26 x 24 = 624 pcs.

6. Find the length of one lateral tie.
   By Inspection = 1.20 m. long

7. Determine the number of 1.20 m. cut from a 6.00 m. steel bar

$$\frac{6.00}{1.20} = 5 \text{ pcs.}$$

8. Divide the result of 5 by result of 7

$$\frac{624}{5} = 124.8 \text{ say } 125 \text{ pcs.}$$

9. Order: 125 pcs. of 10 mm. x 6.00 m. steel bars

Illustration 3-8

From Figure 3-13 prepare an order of 10 mm. steel bars for making the lateral ties.

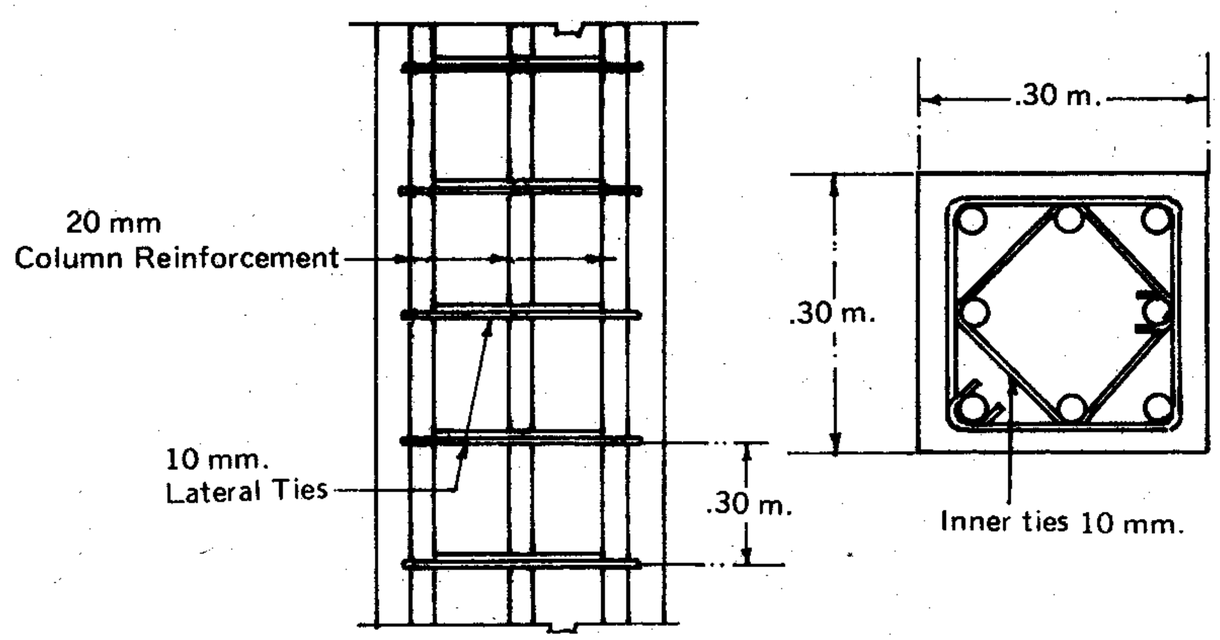

FIGURE 3-13

Solution

1. This problem is an improvement of illustration 3-7. Where the outer ties have been found to be 125 pcs. 10 mm. x 6.00 m. What is to be determined here is the inner ties.

2. By inspection the length of the inner tie is 83 cm.

3. Determine how many 83 cm. could be cut in a 6.00 m. steel bar

$$\frac{600}{83} = 7.23 \text{ pcs.}$$

4. Disregard the fractional value of .23 accept 7 pcs. and Divide: 624 pcs. by 7 pcs. (See 5 of illustration 3-7)

$$\frac{624}{7} = 89 \text{ pcs. of 10 mm. x 6.00 m.}$$

5. Total: 125 + 89 = 214 pcs. 10 mm x 6.00 mm.

Illustration 3-9

From Figure 3-14 prepare an order of 10 mm steel bars making the lateral ties including the tie wire required.

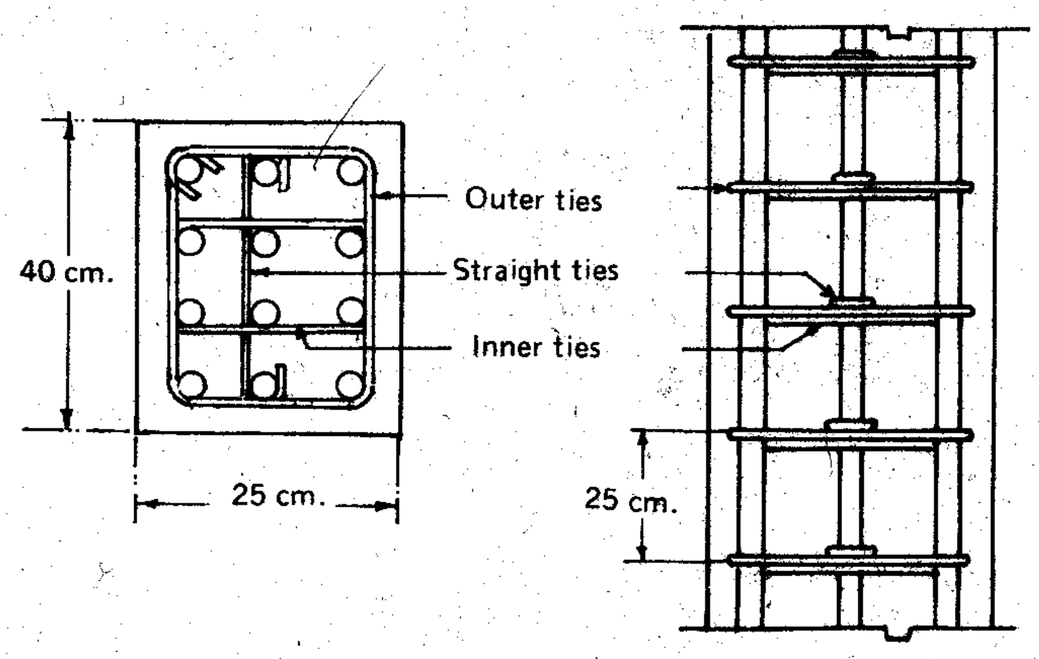

FIGURE 3-14

Given Data:

Number of Columns	=	16 pcs.
Size	=	25 x 40 cm.
Clear Height	=	4.60 m.
L.T. Spacing	=	25 cm.

Solution

1. By inspection there are 3 types of tie:

   a) outer ties = 120 cm. long
   b) inner ties = 85 cm. long
   c) straight ties = 50 cm. long

2. Determine how many 120 cm., 85 cm. and 50 cm. long could be made out from one 6.00 m. steel bar.

   Outer ties: $\frac{600}{120} = 5$ pcs.

   Inner ties: $\frac{600}{85} = 7$ pcs.

   Straight ties: $\frac{600}{50} = 12$ pcs.

3. Determine the number of ties in one column

   $\frac{4.60 \text{ m. ht.}}{.25} = 18.4$ say 19 pcs.

4. Total ties for 16 columns

   19 x 16 = 304 pcs.

5. Divide 304 by each type of tie (in step 2)

$$\frac{304}{5} = 60.8 \text{ say } 61 \text{ pcs.}$$

$$\frac{304}{7} = 43.4 \text{ pcs.}$$

$$\frac{304}{12} = 25.3 \text{ pcs.}$$

6. Order: 130 pcs. of 10 mm x 6.00 m. bars

Note: The fractional value of .4 and .3 was considered as one which was included in the order.

7. Solving for the tie wire:

a) Number of Joints per lateral tie by direct counting = 12

b) Number of ties in a column

12 x 19 = 228 pcs.

c) Total tie wire for the 16 columns

228 x 16 = 3,648 pcs.

d) Multiply by the length of each tie say 30 cm.

3,648 x .30 m. = 1,094.4 m.

e) Divide by 53 m. length per kilogram

$$\frac{1{,}094.4}{53} = 20.6$$

say 21 kilograms of No. 16 G.I. wire

TABLE 3-6 NUMBER OF LATERAL TIES IN ONE STEEL BAR AND QUANTITY PER METER LENGTH OF COLUMN

SPACING OF LATERAL TIES in cm.	NUMBER OF LATERAL TIES Per Meter Height	LENGTH OF TIES with Hook & Bend in cm.	NUMBER OF CUT IN ONE STEEL BAR LENGTH				
			5.00 m. pcs.	6.00 m. pcs.	7.50 m. pcs.	9.00 m. pcs.	12.00 m. pcs.
15	6.70	60	x	10	x	15	20
		70	7	x	x	x	17
20	5.15	80	6	x	x	11	15
		85	x	7	x	x	14
25	4.13	90	x	x	8	10	13
		95	5	x	x	x	x
30	3.43	100	5	6	x	9	12
		105	x	x	7	x	x
35	3.00	110	x	x	x	8	x
		115	x	5	x	x	x
40	2.64	120	4	5	x	x	10
		125	4	x	6	x	x
45	2.36	130	x	x	x	x	9
		135	x	x	x	x	x
50	2.14	140	x	4	x	x	x
		145	x	4	5	6	x
55	1.96	150	x	4	5	6	8
		160	3	x	x	x	x
60	1.81	170	x	x	x	5	7
		180	x	x	4	5	x
		190	x	3	x	x	x
		200	x	3	x	x	6

x - not advisable length for economical reason.

Table 3-6 was prepared to simplify further the estimate for column lateral ties and stirrups for beams and girders. It will be noted that there are x - entry in the Table which simply means that such length of steel bar is not recommended for economical reason. The main objective of this Table is to guide the estimator in the selection of a reinforcing bar whose length when divided by the length of each lateral tie will avoid extra cut of unwanted length. To use the table, consider the following example.

Illustration 3-10

A building has 12 columns with a cross sectional dimension of 30 cm. x 40 cm. each with a clear height of 7.00 meters. Prepare an order of 10 mm steel bars for the lateral ties spaced at 20 cm.

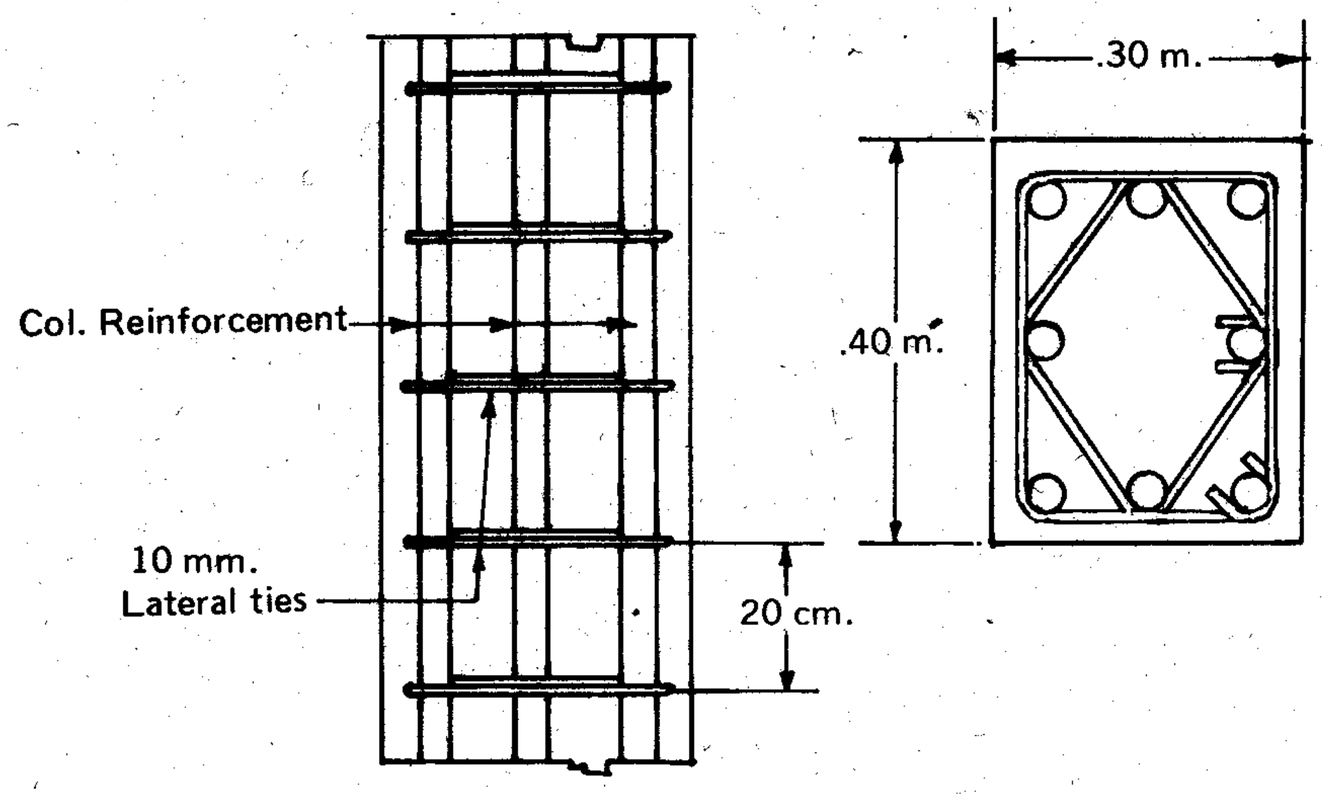

FIGURE 3-15

Solution

1. By inspection there are two types of lateral ties
   a) outer ties = 125 cm. long w/ hook
   b) inside ties = 80 cm. long w/ hook

2. Find the total length of the 12 columns

   12 x 7.00 m. = 84.00 meters

3. Referring to Table 3-6 spacing at 20 cm.
   Multiply:
   84 x 5.15 = 432 pcs.

4. Referring to Table 3-6, for a 125 cm. outer ties
   Divide:

$$\frac{432}{6} = 72 \text{ pcs. } 10 \text{ mm} \times 7.50 \text{ m. bars}$$

or

$$\frac{432}{4} = 108 \text{ pcs. } 10 \text{ mm} \times 5.00 \text{ m. bars}$$

5. From Table 3-6 for the 80 cm. Inside tie
   Divide:

$$\frac{432}{6} = 72 \text{ pcs. } 10 \text{ mm} \times 5.00 \text{ m. bars}$$

6. Order:
   72 pcs. 10 mm. x 7.50 m. steel bars
   72 pcs. 10 mm. x 5.00 m. steel bars

Solving for the Tie Wire

1. Total number of lateral ties = 432
2. Total number of vertical reinforcement = 8

3. Multiply:
   432 x 8 = 3,456

4. If the length of each tie is 40 cm.

   Multiply:
   3,456 x .40 m. = 1,382.4 meters

5. Divide by 53 meters (the length of tie wire in one kilo)

$$\frac{1,382.4}{53} = 26 \text{ kilograms}$$

3-10 STIRRUPS FOR BEAMS AND GIRDERS

Stirrup is the structural reinforcing member that holds or binds together the main reinforcement of a beam or girder to a designed position.

The two types of stirrups commonly used are:

1. closed stirrups
2. open stirrups

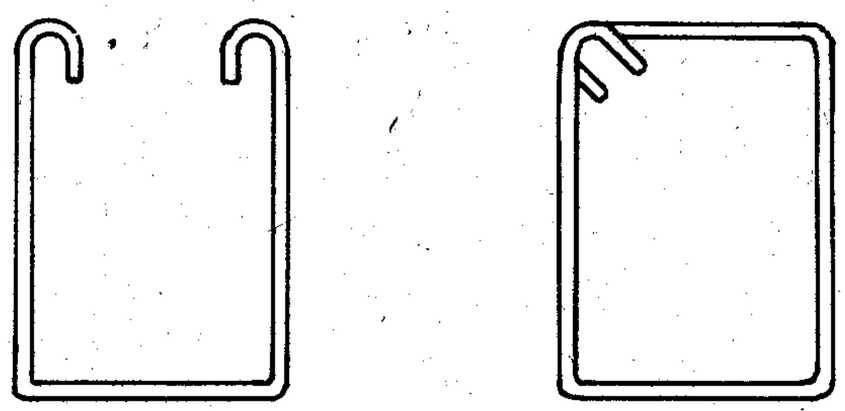

Open Stirrups Closed Stirrups

FIGURE 3-16

The methods in estimating the number or quantity of stirrups required is the same as that of the lateral ties as explained in Article 3-9 with the aid of Table 3-6. However, the spacing of the stirrups could not be determined by the linear meter method because the spacing of stirrups become closer as it approaches the beam support. The number of stirrups is best determined by direct counting per span type and by categories according to the design as indicated in the detailed drawing.

Illustration 3-11

A concrete beam with a cross sectional dimension of 25 x 40 cm. requires 10 mm open stirrups spaced as shown in Figure 3-17. Prepare the order of 10 mm. steel bars for stirrups of 8 beams with the same category.

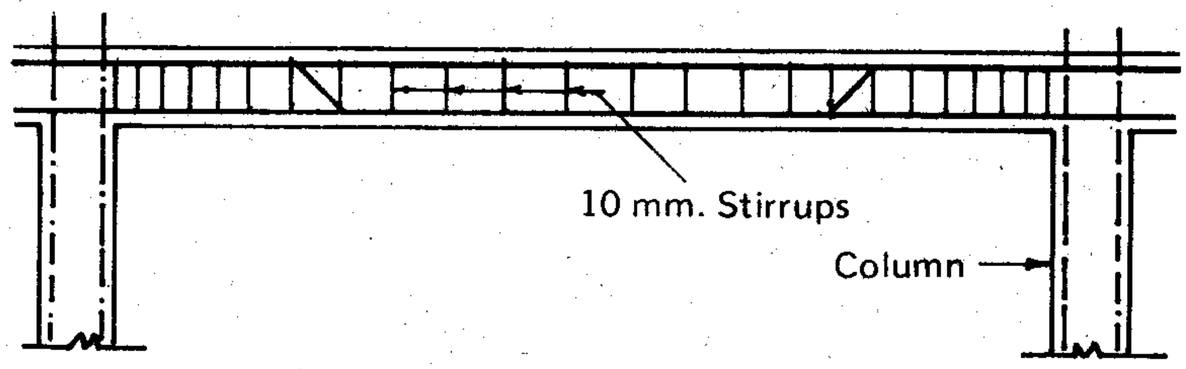

FIGURE 3-17

Solution

1. By direct counting there are 24 stirrups at 98 cm. say 1.00 m. long

2. Total number of stirrups
   24 x 8 beams = 192 pcs.

3. Referring to Table 3-6 for a 1.00 m. long stirrups using a 5.00 m. long steel bars.

   Divide:

   $$\frac{192}{5} = 38.4 \text{ pcs. } 10 \text{ mm. } \times 5.00 \text{ m.}$$

   or using a 6.00 m. long steel bars.

   Divide:

   $$\frac{192}{6} = 32.0 \text{ pcs. } 10 \text{ mm } \times 6.00 \text{ m.}$$

4. Order: 32 pcs. of 10 mm x 6.00 m. steel bars

Comment:

If 5.00 m. steel bar is chosen, the order will be 39 pcs. not 38.4 because we cannot order .4 pieces of steel bar. After cutting the stirrups there will be an excess of .6 meter which is equivalent to 3.00 meters long. To be exact a 6.00 meter steel bars was chosen unless the extra length is intended for use on other parts of the construction the 39 pcs. at 5.00 m. order is alright.

3-11 SPIRAL AND COLUMN TIES

The spiral reinforcement consist of evenly spaced continuous spirals held firmly in place by at least three vertical bar spacers. The center to center spacing of this spirals should not exceed 6th part of the diameter core. The clear spacing between the spirals should not exceed 7.5 cm. nor less than 5.00 cm. or one and one half times the biggest size of the coarse aggregate or gravel.

Illustration 3-12.

A spiral column with a cross sectional diameter of 50 cm. requires 10 mm spiral reinforcement as shown in Figure 3-18. If there are 14 columns at 7.00 meters high each, find the number of 10 mm steel bars needed for a 5.00 cm. pitch.

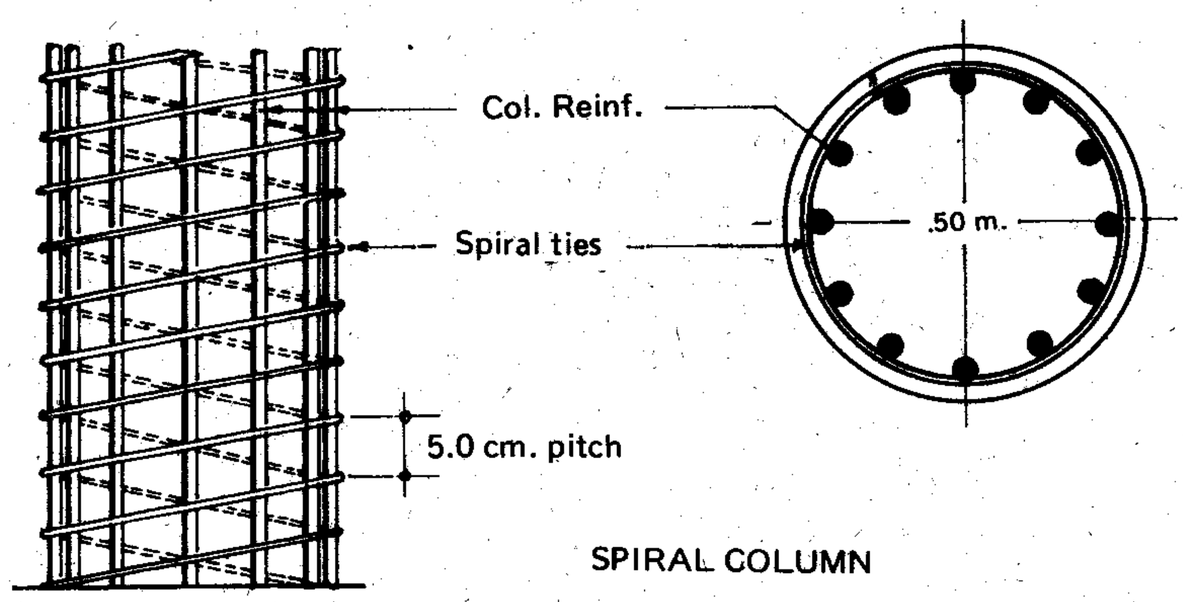

FIGURE 3-18

Solution

A. Spiral Reinforcement

1. Find the total length of the 14 columns

   7 x 14 = 98 meters

2. From Table 3-7 for a 50 cm. column diameter 5.00 cm. pitch.

   Multiply:

   98 x 3.223 = 315.8 say 316 pcs.

3. Order: 316 pcs. 10 mm x 9.00 m. steel bars

B. Tie Wire

1. Find the number of vertical bars per column = 12

2. Referring to Table 3-7 for a 5 cm. pitch
   Multiply:

   12 x 21 turns per meter = 252 ties

3. Total tie wire for 14 column bar intersections at 7.00 m. ht.

   252 x 7.00 m x 14 = 24,696 pcs.

4. Total length of the wire at .30 m. long per tie wire

   24,696 x .30 = 7,409 m.

5. Convert to kilogram at 53 m. long/kilo
   Divide:

   $$\frac{7409}{53} = 139.8 \text{ say } 140 \text{ kilos}$$

6. Order: 114 kilos No. 16 G.I. wire

TABLE 3-7 NUMBER OF SPIRAL REINFORCING BARS PER METER HEIGHT *

COL. DIAM. in cm.	PITCH in cm.	NO. OF TURN per meter height	NUMBER OF STEEL BARS AT		
			6.00 m long	9.00 m. long	12.00 m.
30.0	5.00	21	2.604	1.706	1.269
	6.25	17	2.108	1.381	1.027
	7.50	14.3	1.778	1.165	.866
32.5	5.00	21	2.894	1.896	1.410
	6.25	17	2.342	1.535	1.141
	7.50	14.3	1.975	1.294	.962
35.0	5.00	21	3.183	2.085	1.550
	6.25	17	2.577	1.688	1.255
	7.50	14.3	2.172	1.423	1.058
37.5	5.00	21	3.472	2.275	1.692
	6.25	17	2.811	1.842	1.393
	7.50	14.3	2.370	1.524	1.154
40.0	5.00	21	3.762	2.465	1.833
	6.25	17	3.045	1.995	1.484
	7.50	14.3	2.567	1.682	1.251
42.5	5.00	21	4.051	2.654	1.974
	6.25	17	3.281	2.149	1.598
	7.50	14.3	2.765	1.812	1.347
45.0	5.00	21	4.340	2.844	2.115
	6.25	17	3.513	2.302	1.712
	7.50	14.3	2.962	1.940	1.443
47.5	5.00	21	4.630	3.033	2.256
	6.25	17	3.748	2.455	1.826
	7.50	14.3	3.159	2.070	1.539
50.0	5.00	21	4.919	3.223	2.397
	6.25	17	3.982	2.609	1.940
	7.50	14.3	3.357	2.199	1.635

55.0	5.00	21	5.498	3.602	2.678
	6.25	17	4.451	2.916	2.168
	7.50	14.3	3.752	2.458	1.828
60.0	5.00	21	6.077	3.981	2.960
	6.25	17	4.919	3.223	2.396
	7.50	14.3	4.146	2.717	2.020
70.0	5.00	21	7.234	4.740	3.524
	6.25	17	5.856	3.837	2.853
	7.50	14.3	4.936	3.234	2.405
80.0	5.00	21	8.391	5.498	4.088
	6.25	17	6.793	4.451	3.310
	7.50	14.3	5.726	3.752	2.790
90.0	5.00	21	9.549	6.256	4.652
	6.25	17	7.730	5.064	3.766
	7.50	14.3	6.366	4.171	3.101
100.0	5.00	21	10.706	7.014	5.216
	6.25	17	8.667	5.678	4.222
	7.50	14.3	7.137	4.676	3.477

* Values given includes the end-lap or splice allowance.

3-12 ONE WAY REINFORCED CONCRETE SLAB

Illustration

From Figure 3-19. Determine the number of steel bars required including the tie wire.

Solution

1. Given Data:

Spacing of Main Reinforcement	=	150 mm. (.15 m.)
Temp. Bars Spacing	=	250 mm. (.25 m)
Size of the Reinforcement	=	13 mm. ϕ
Type of Reinforcement	=	One Way

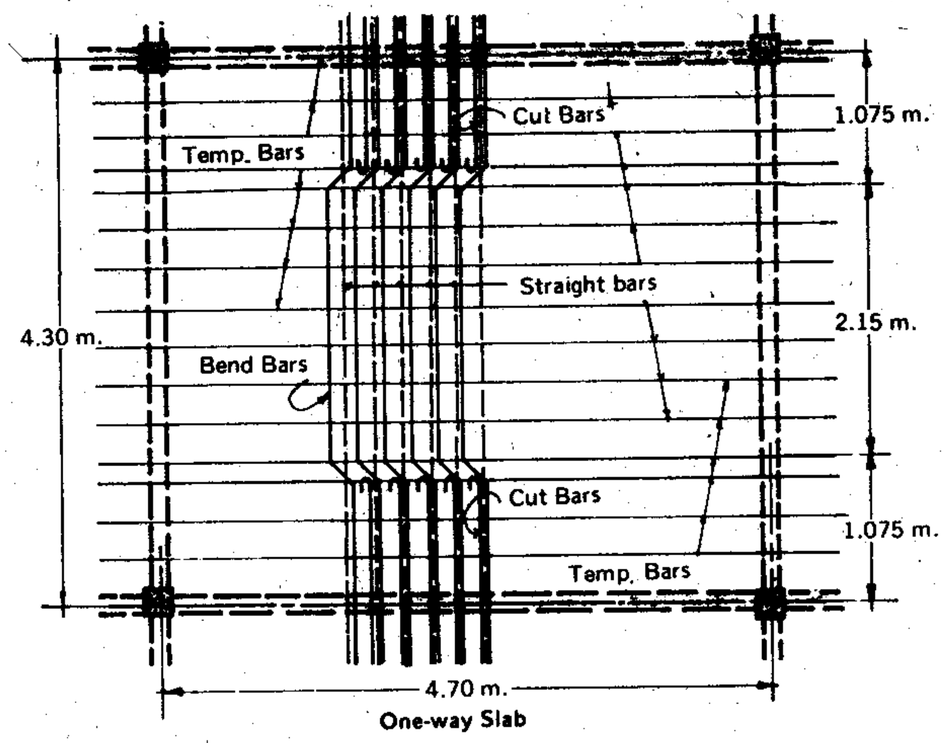

FIGURE 3-19

2. Determine the number of Main Reinforcement

$$\frac{4.70}{.15\text{ m.}} + 1 = 32.33 \text{ pcs. } 5.00 \text{ m. steel bar}$$

Note: In dividing the length by the bar spacing what is found is the number of spacing, add one (1) to get the number of bars.

3. Determine the length of the cut bars alternate to main reinforcement

$$1.075 + .175 \text{ (hook)} = 1.25 \text{ meters}$$

4. Using a 5.00 m. steel bars

$$\frac{5.00}{1.25} = 4 \text{ pcs. number of cut bar in one steel bar}$$

5. Divide: Step 2 by step 4

$$\frac{32.33}{4} = 8 \text{ pcs. } 5.00 \text{ m. steel bar}$$

6. Total Main Reinforcing Bars

$$32.33 + 8 = 40.33 \text{ pcs.}$$

7. Solve for the Temperature bars at 2.15 m. span

$$\frac{2.15}{.25} + 1 = 9.6 \text{ pcs.}$$

8. Temperature bars at 1.075 span

$$\frac{1.075}{.25} + 1 = 5.3$$

9. Multiply by 2 layers at 2 sides

$$5.3 \times 4 = 21.2 \text{ pcs.}$$

10. Add result of 6 and 9

$$9.6 + 21.2 = 30.8 \text{ pcs.}$$

11. Summary total of 6 and 10

$$40.33 + 30.8 = 71.1 \text{ pcs. } 13 \text{ mm} \times 5.00 \text{ m.}$$
steel bar

2nd Solution: By the Area Method

1. Solve for the area of the floor

$$4.70 \times 4.30 = 20.21 \text{ sq. m.}$$

2. Referring to Table 3-8 using 5.00 m. bars @ 150 mm spacing
   Multiply:

$$20.21 \times 3.524 = 71.2 \text{ pcs.}$$

Solving for Tie Wire @ 25 cm. o.c.

1. Referring to Table 3-8
   Multiply:

   20.21 x .163 = 3.29 kilos No. 16 G.I. Wire

TABLE 3-8 QUANTITY OF STEEL BARS AND TIE WIRES IN A ONE WAY REINFORCED CONCRETE SLAB

BAR SPACING on center mm	NUMBER OF STEEL BARS PER SQUARE METER					LENGTH OF TIE WIRE	
	5.00 m pcs.	6.00 m pcs.	7.50 m. pcs.	9.00 m. pcs.	12.00 m. pcs.	25 cm. kg. per sq. m.	30 cm.
100	4.493	3.667	2.856	2.320	1.834	.242	.291
125	3.911	3.186	2.483	2.015	1.593	.197	.236
150	3.524	2.866	2.234	1.812	1.433	.163	.195
175	3.247	2.637	2.056	1.667	1.319	.141	.169
200	3.039	2.465	1.192	1.558	1.233	.126	.152
225	2.878	2.332	1.819	1.473	1.166	.111	.133
250	2.749	2.225	1.737	1.405	1.113	.101	.121
275	2.643	2.138	1.669	1.350	1.069	.091	.109
300	2.554	2.065	1.612	1.304	1.033	.086	.103

3-13 TWO WAY REINFORCED CONCRETE SLAB

Illustration

From Figure 3-20, determine the number of 13 mm ø steel bar and tie wire required.

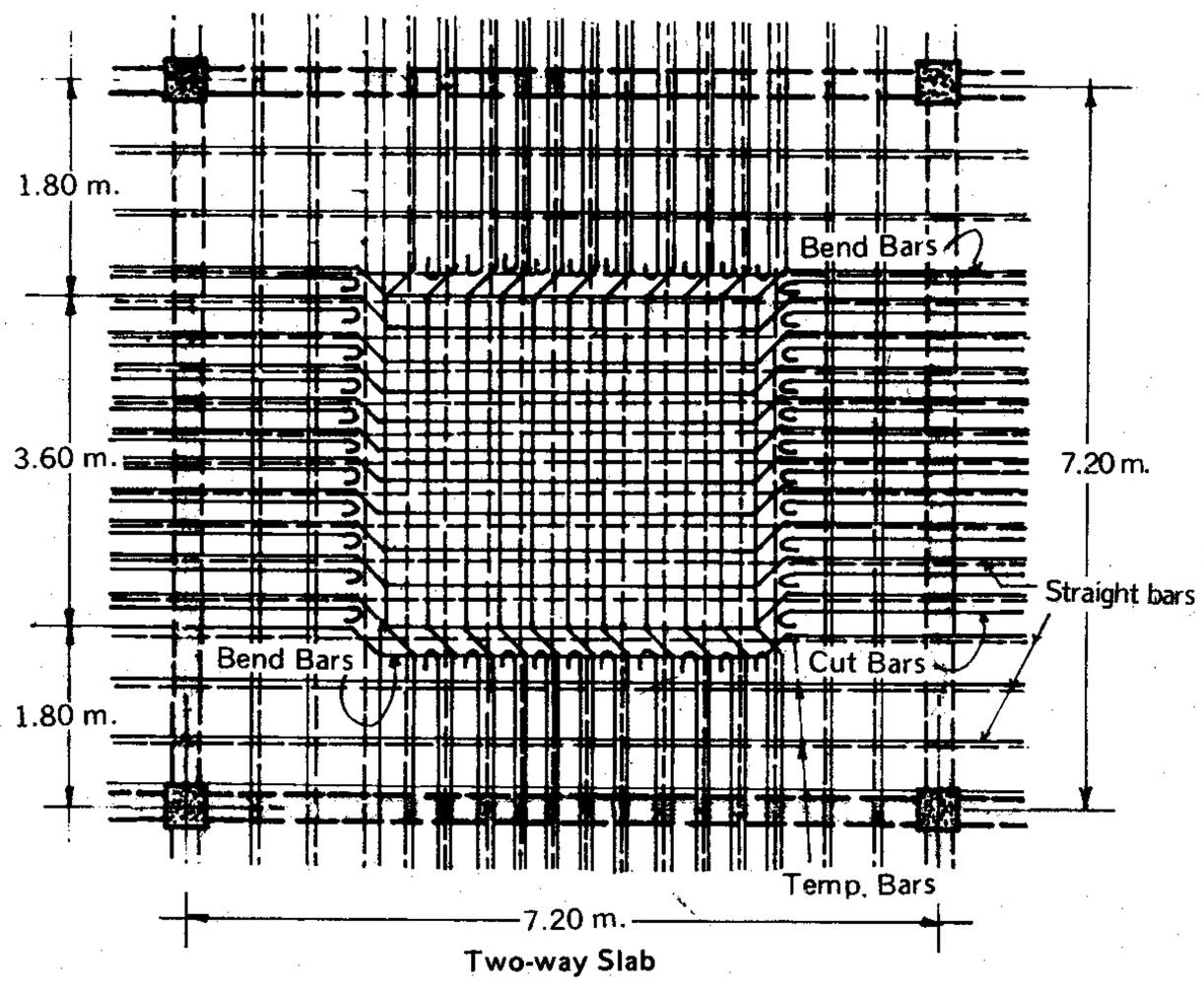

Two-way Slab

FIGURE 3-20

Solution

1. Solve for the main reinforcement

$$\frac{3.60}{.10} + 1 = 37 \text{ pcs.}$$

2. There are two way - run

$$37 \times 2 = 74 \text{ pcs. steel bars}$$

3. For cut bars @ 1.87 long there are 4 pcs. cut in one 7.50 steel bar

$$\frac{74}{4} = 18.5 \text{ pcs. steel bars}$$

4. Temperature bars at 1.80 m. span

$$\frac{1.80}{.25} + 1 = 8.2 \text{ pcs.}$$

5. Multiply by 4 sides at 2 layers

$$8.2 \times 8 = 65.6 \text{ pcs.}$$

6. Summary total of step 2, 3 and 5

$$74 + 18.5 + 65.6 = 158 \text{ pcs.}$$

Second Solution by the Area Method

1. Area of the floor slab = 51.84 sq. m.

2. Referring to Table 3-9, for 7.50 m. steel bars @100 mm spacing

$$51.84 \times 3.050 = 158 \text{ pcs.}$$

3. Order: 158 pcs. 13 mm x 7.50 m. steel bars

Solve for No 16 G.I. wire @ .30 m.

1. Referring to Table 3-9

$$51.84 \times .437 = 22.65 \text{ say 23 kilos}$$

TABLE 3-9 QUANTITY OF STEEL BARS AND TIE WIRES IN A TWO WAY REINFORCED CONCRETE SLAB

BAR SPACING on center mm	NUMBER OF STEEL BARS PER SQ. M.					LENGTH OF TIE WIRE	
	5.00 m pcs.	6.00 m pcs.	7.50 m pcs.	9.00 m pcs.	12.00 m. pcs.	25 cm. kg. per sq. m.	30 cm.
10.0	4.953	3.995	3.050	3.047	2.000	.364	.437
12.5	4.409	3.549	2.703	2.734	1.775	.279	.335
15.0	4.047	3.252	2.471	2.524	1.626	.238	.286
17.5	3.788	3.039	2.306	2.377	1.520	.208	.250
20.0	3.594	2.880	2.182	2.266	1.440	.185	.222
22.5	3.443	2.756	2.085	2.179	1.378	.168	.202
25.0	3.322	2.656	2.008	2.109	1.328	.156	.187
27.5	3.223	2.575	1.945	2.053	1.288	.146	.175
30.0	3.141	2.507	1.892	2.005	1.254	.138	.165

3-14 Concrete Pipe Reinforcement

From Figure 3-21, solve for the steel reinforcement using 10 mm and number 16 Tie Wire.

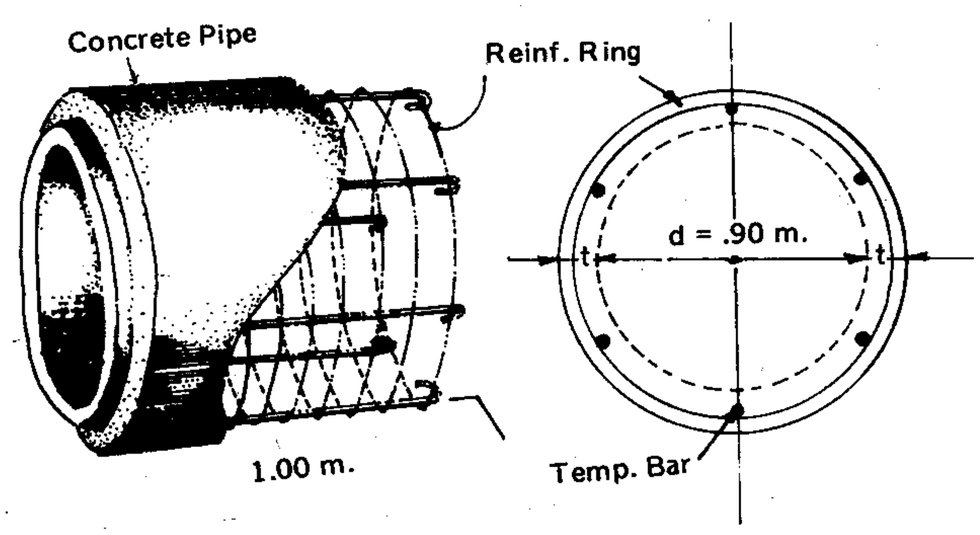

FIGURE 3-21

Solution

1. Solve for the circumference of the circle at midpoint of the concrete "t".

$$C = \pi d$$
$$C = 3.1416 \times (.90 + .10)$$
$$= 3.1416 \times 1.00 \text{ m.}$$
$$= 3.1416 \text{ m.}$$

2. Total length of one ring add .15 m. splice

$$3.1416 + .15 = 3.29 \text{ m.}$$

3. Find the total number of ring at .20 cm. o.c.

$$\frac{1.00 \text{ ht.}}{.20} = 5 + 1 \text{ to get the total no. of ring} = 6 \text{ pcs.}$$

4. Temp. Bars @ .25 m. o.c.

$$\frac{3.1416}{.25} = 12.56 \text{ say 13 pcs. @ 1.00}$$

Tie Wire

1. The number of ring multiplied by the number of temperature bars.

$$6 \times 13 = 78 \text{ pcs. @ .30 m. long per tie wire}$$

2. Total length: $78 \times .30 = 23.40$ m.

3. Divide by 53 to find the weight in kg.

$$\frac{23.40}{53} = .44 \text{ kilos number 16 Tie Wire}$$

chapter 4

LUMBER

4-1 WOOD

Wood is that fibrous substance which compose the trunk and branches of the tree that lies between the pith and the bark. The versatility of using wood in the construction has lifted it to its present importance and high demand in almost all types of construction.

Even with the introduction and acceptance of new materials and methods of construction, wood is evidently much in use. Wood because of its strength, light in weight, durability and ease of fastening has become one of the most important building material

4-2 DEFINITION OF TERMS

Lumber is the term applied to wood after it is sawed or sliced into boards, planks, timber, etc.

Rough Lumber is the term applied to unplaned or undressed lumber.

Surface or Dressed Lumber is a planed lumber having at least one smooth side.

s2s; s4s are dressed lumber wherein the number connotes the number of smooth side such as s2s means smooth on two sides and s4s for four sides.

Slab is a kind of rough lumber which is cut tangent to the annual rings running the full length of the log and containing at least one flat surface.

Timber is a piece of lumber five inches or 13 cm. or larger in its smallest dimension.

Plank is a wide piece of lumber from 4 to 13 cm. thick.

Board is a piece of lumber less than 4 cm. thick with at least 10 cm. wide.

Flitch is a thick piece of lumber.

Fine Grained when the annual rings are small the grain or marking which separates the adjacent rings is said to be fine grained. When large, it is called **Coarse Grained.**

Straight Grained when the direction of the fibers are nearly parallel with the side and edges of the board, it is said to be straight grained.

Crooked or Cross-Grained is a lumber taken from a crooked tree.

4-3 CLASSIFICATION OF WOOD

Wood used in building construction are those wood which grows larger by addition of layer on the outer surface each year known to botanist as **Exogens.**

Wood are classified according to:

1. **Mode of Growth**

   a) **Exogeneous** are those outward growing trees which are most preferred for lumbering.

   b) **Endogeneous** are those inside growing trees which are not preferred for lumbering because they produced a soft center core.

2. **Density - Density is either**

   a) Soft
   b) Hard

3. **Leaves** - The leaves of the tree is either

   a) Needle shape
   b) Broad shape

4. **Shade or Color**

   a) White
   b) Yellow
   c) Red
   d) Brown
   e) Black, etc.

5. **Grain**

   a) Straight
   b) Cross
   c) Fine
   d) Coarse

6. **Nature of the surface when sawed**

   a) Plain
   b) Grained
   c) Figured or Marked

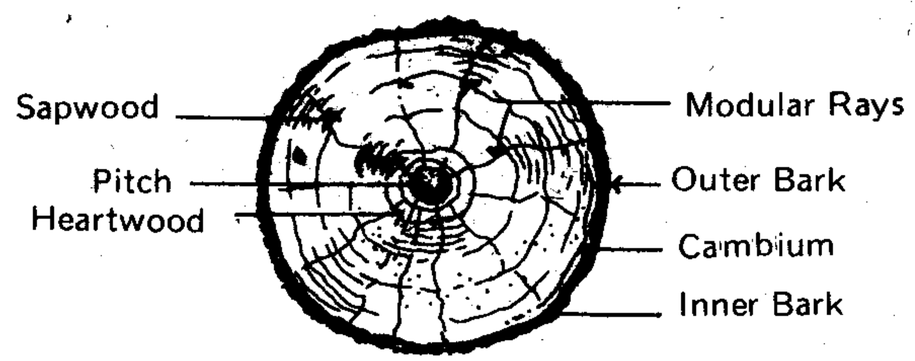

Cross Section of a Tree

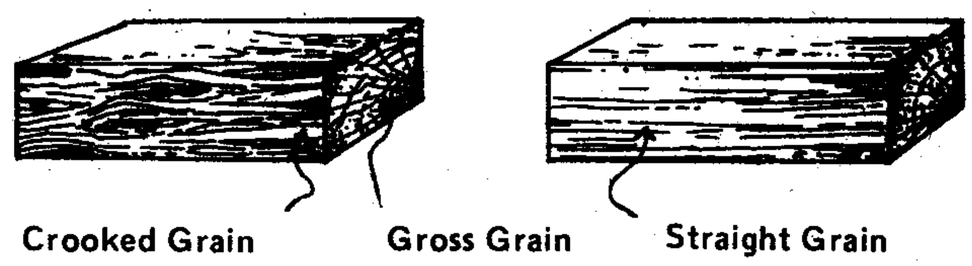

FIGURE 4-1

4-4 METHODS OF SAWING THE LOG

Lumbering is the term applied to the operations performed in preparing the wood for commercial purposes. **Logging** is the process or operation from cutting of trees, hauling and delivering of wood to the sawmill for sawing. **Sawing** on the otherhand, is the operation of cutting the logs into commercial sizes of lumber.

The methods and manner of log sawing are:

1. **Plain or Bastard Sawing**

2. **Quarter or Rift Sawing**

   a) Radial
   b) Tangential
   c) Quarter Tangential
   d) Combined Radial and Tangential

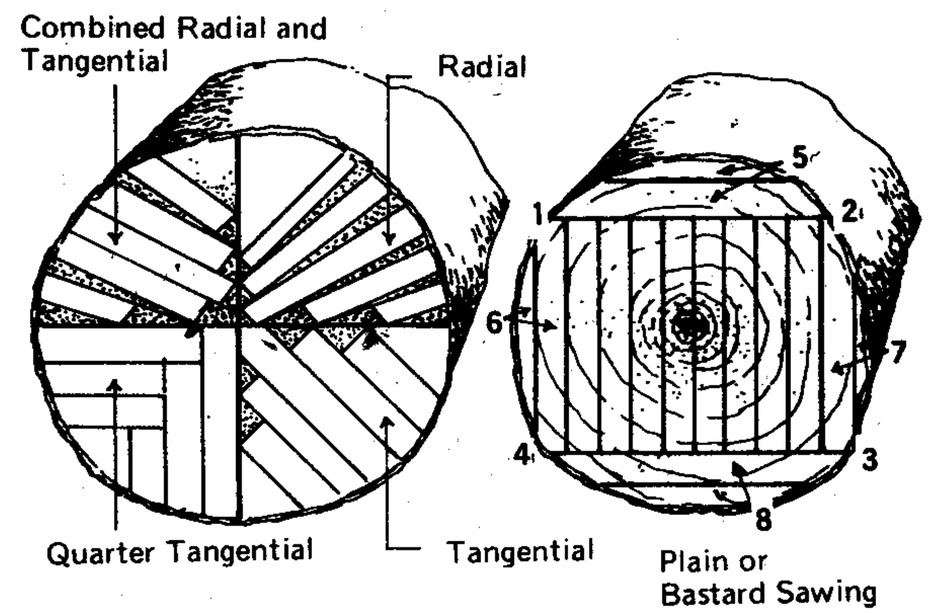

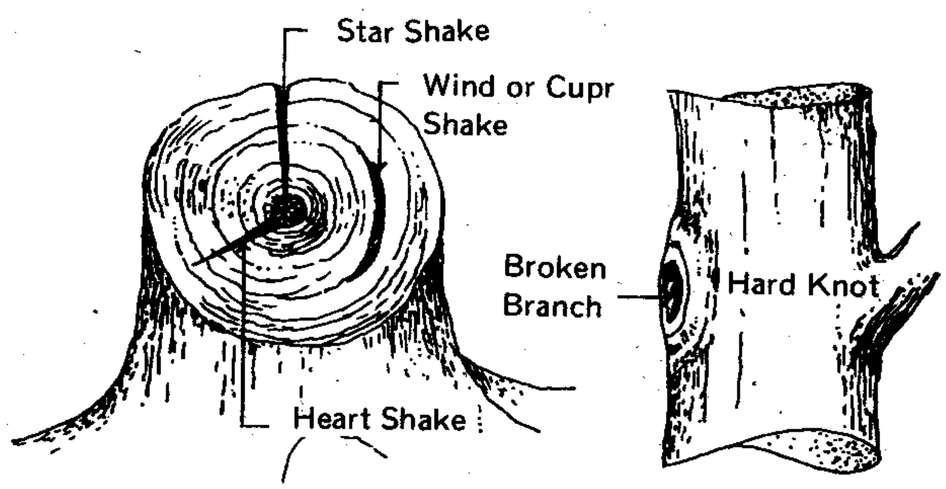

FIGURE 4-2

4-5 DEFECTS IN WOOD

Defects are irregularities found in wood. The most common defects in wood are:

1. **Caused by Abnormal Growth**

   a) **Heart Shakes** are radial cracks originating at the heart of the logs commonly found in old trees.

   b) **Wind Shakes or Cup Shakes** are cracks or breaks across the annual rings of the wood during its growth caused by excessive bending of the tree due to strong wind.

   c) **Star Shakes** are composed of several heart shakes which radiate from the center of the log in star-like manner.

   d) **Knots** occurs at the starting point of a limb or branch of the wood.

2. **Due to Deterioration**

   a) **Dry Rot** is caused by fungi in a seasoned lumber due to the presence of moisture.

   b) **Wet rot** takes place sometime in the growth of the tree caused by water saturation.

4-6 SEASONING OF LUMBER

By nature, trees contain moisture in their cell layers. These moisture has to be expelled thoroughly in order to preserve the

wood from shrinkage or decay. Experiments have proven that wood which are immersed in water immediately after cutting into flitches is less subject to splitting and decay, it reduces warping but becomes brittle and less elastic. Soaking of wood into liquid is the method of seasoning introduced and practiced by the ancient Roman builders.

The methods of seasoning lumber are:

1. **Natural or Air Seasoning** is considered as one of the best method of seasoning lumber, although the period involved is relatively longer.

2. **Artificial Seasoning** is a process wherein the lumber is stacked in a drying kiln and then exposed to steam and hot air. Wood from this process undergoes quick drying and is classified as quite inferior in quality as compared to those lumber seasoned by the natural or air seasoning method.

The artificial seasoning methods employed are:

a) Forced Air Drying
b) Kiln Drying
c) Radio Frequency Dieletric Drying

Good seasoning is the first consideration for a successful preservation of wood. Wood does not decay naturally through age, nor will it decay if it is kept constantly dry or continuously submerged in water.

The common causes of decay in wood are:

1) Alternate moisture and dryness
2) Fungi and Molds
3) Insects and Worms
4) Heat and Confined Air

The process of preserving wood are:

1) **External** - the wood is coated with preservative (as paint) which penetrates the fiber.

2) **Internal** - a chemical compound is impregnated at a pressure to permeate the wood thoroughly.

4-7 UNIT OF MEASURE OF LUMBER

Board foot is the unit of measure used in computing volume of lumber despite the introduction of the metric measure. One board foot simply mean one square foot by one inch thick or equivalent to 144 cu. inches. The width and thickness of the commercial lumber are expressed in inches while the length are in feet of even number. Board foot is found by dividing the product of the thickness times the width and the length by 12.

Illustration 4-1

Find the board foot of 5 pieces 2" x 6" x 14' lumber.

Solution

$$\frac{5 \times 2 \times 6 \times 14}{12} = 70 \text{ bd. ft.}$$

How to determine the number of board foot in a log.

$$\text{Bd. Ft. Volume} = \frac{(D - 4)^2 L}{16}$$

Where:

D = is the smaller diameter of log
L = the length of the log
4 = slab reduction allowance

Illustration 4-2

Find the total board foot of lumber that could be derived from a 28 inches diameter log by 20 feet long.

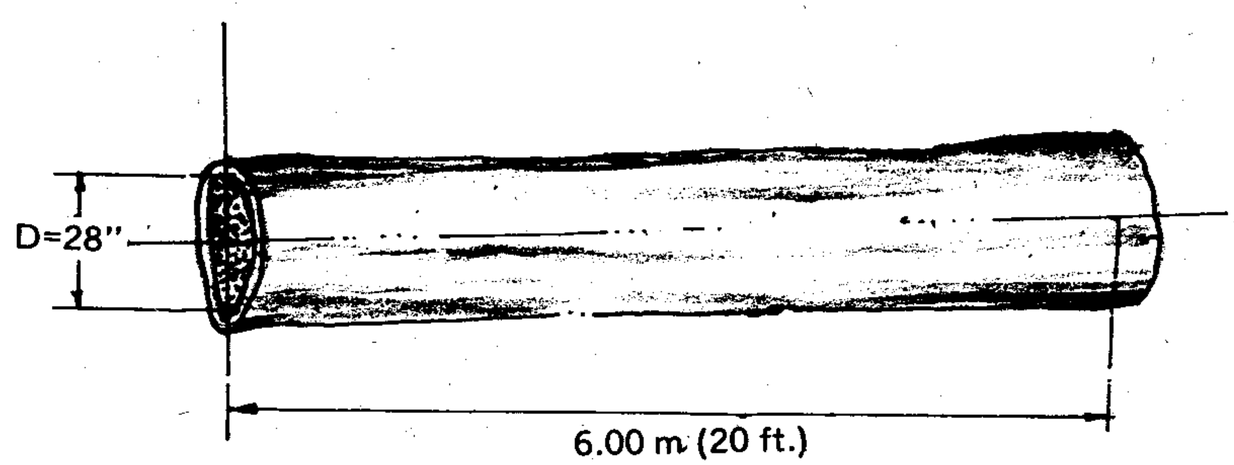

FIGURE 4-3

Solution

$$\frac{(28 - 4)^2 \times 20'}{16} = 720 \text{ bd. ft.}$$

Prior to the introduction of sawmills, the manner of sawing lumber is by manual hand sawing which is still common today in lumbering at the forest and in the rural areas. The methods being adopted in computing the labor cost for sawing are:

1. By the board foot or
2. By the pulgada system

The **Board foot method** is simply finding the total board foot of sawed lumber multiplied by the agreed unit price. The **Pulgada System** is computed by multiplying the width in inches by the length of lumber in meter, the result is then multiplied by the unit price.

Illustration 4-3

In slicing a 6" x 6" x 3.00 m. to a 2" x 6" x 3.00 m. lumber, how much will it cost if the unit price is 50 centavos per pulgada?

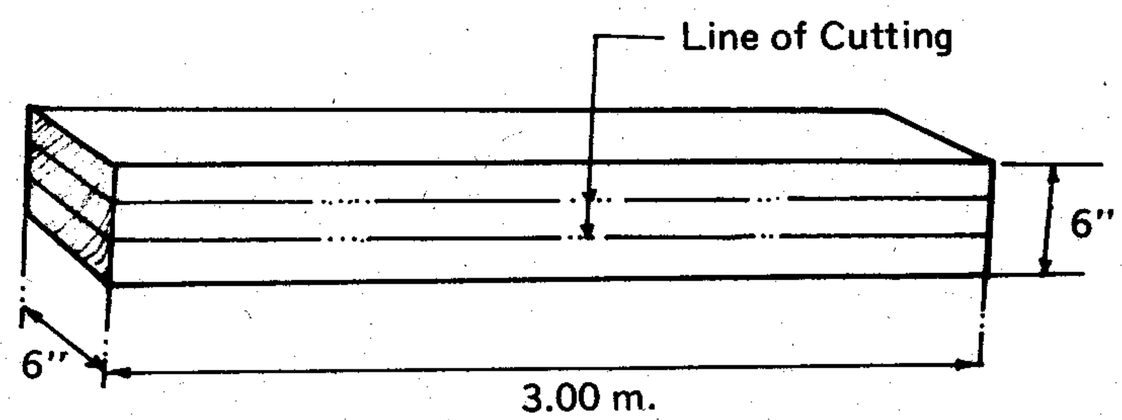

FIGURE 4-4

Solution

1. Multiply the width by the length
   6 x 3.00 = 18 pulgadas

2. Multiply by the number of run or slice
   18 x 2 = 36 pulgadas

3. Finding the cost
   36 x ₱0.50 = P18.00

Illustration 4-4

How much will it cost to convert a 12" x 14" x 20 ft. lumber to a size of 2" x 6" x 20 ft. at a price of ₱0.50 per pulgada?

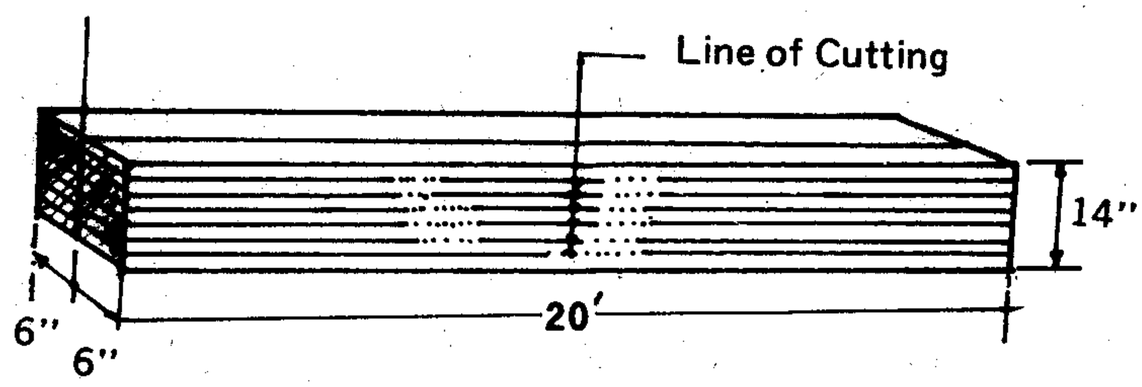

FIGURE 4-5

Solution

1. The first run of the saw along 14 inches
   Convert: 20 ft. = 6.00 meters
   14 x 6.00 m. = 84 pulgada

2. The succeeding run along the 12" is
   12 x 6.00 m. = 72 per run

3. Total run: 72 x 6 = 432 pulgada

4. 432 + 84 = 516 x P0.50 = P258.00

4-8 WOOD POST

In estimating wooden post for building structure, there are only three things to consider:

a) The size of the post
b) The quantity or number of posts
c) The length of the post

The size of the post is already indicated in the plan. The **quantity or number of the post** is determined through direct counting based from the detailed plan of the building. The **length** is determined under the following considerations:

a) For a **one storey building** verify if the elevation height indicates from floor to ceiling, if the ceiling is below the girts, then, add the depth of the girts, and the bottom chord or the rafters to the height or length of the post.

b) For a **two storey building** verify if the height indicates from floor to floor, if so, then consider the additional length for the girders, floor, joist and the flooring. For the second floor, add the depth of the girts, bottom chord or rafters to the height of the post.

c) If the plan calls for post splices, add the lapping length to the height of the post as indicated in the plan.

d) Remember that the commercial length of lumber is always of even number or divisible by two, if the computed length is odd number adjust the order to the next even number or length.

Illustration 4-5

From Figure 4-6, determine the length of the wooden post required.

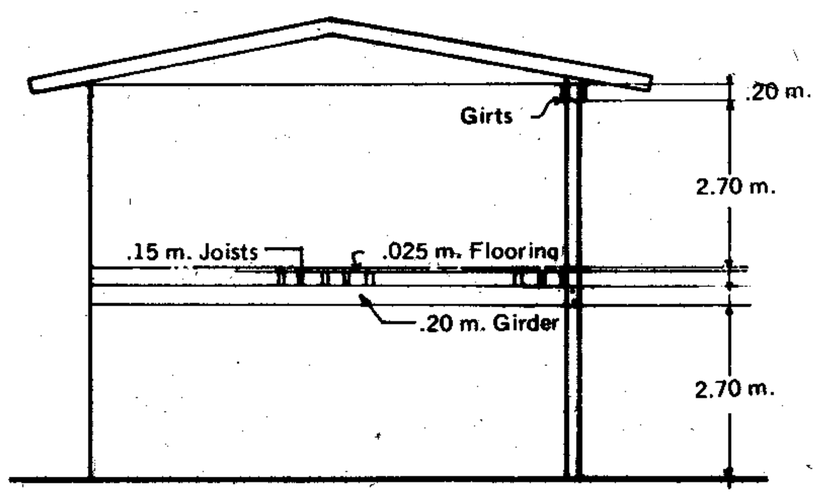

FIGURE 4-6

Solution:

1. Find the total height from floor to ceiling
   2.70 + 2.70 = 5.40 meters

2. Determine the depth of girder, floor joist, flooring and girts.

Girder	=	.20
Floor Joist	=	.15
Flooring	=	.025
Girts	=	.20
		.575 m.

3. Add the result of 1 and 2
   5.40 + .575 = 5.975 m.

4. Convert to feet
   $\frac{5.975 \text{ m.}}{.30}$ = 19.9 ft.
5. Order length = 20 feet

4-9 GIRDER

The **Girder** is the structural part of a building that carries the floor joists and the flooring. Its quantity is determined by the Direct Counting Method based from the floor framing of the building plan, the length however, is determined under the following considerations.

1. If the span or distance of the post is indicated from center to center, the length of the girder is equal to the span plus the width or one side of the post.

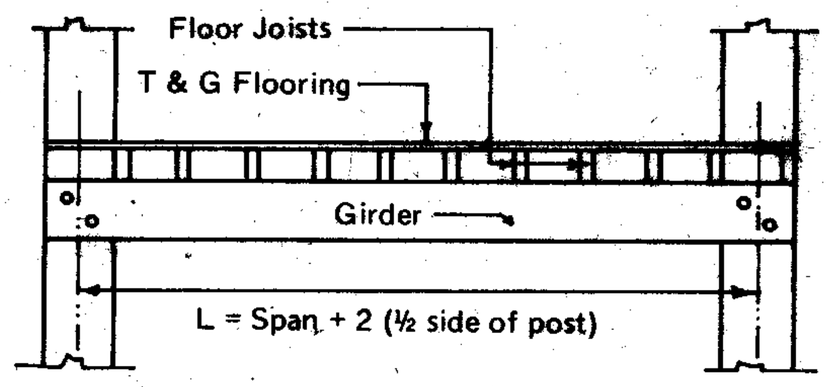

FIGURE 4-7

2. If the span of the post indicates from outer to outer side of the post, the girder length is equal to the span of the post.

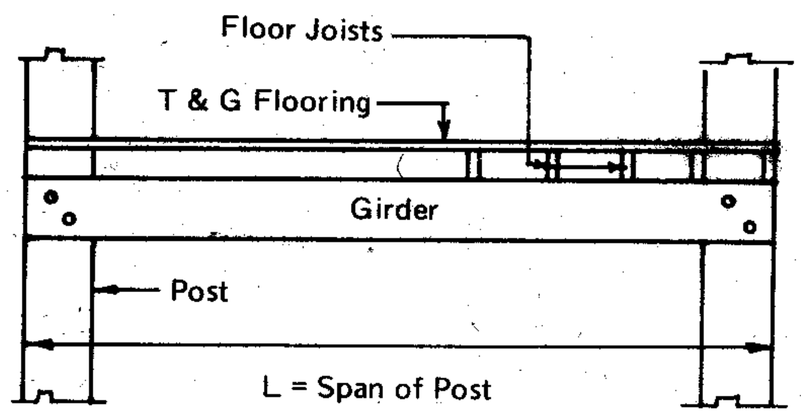

FIGURE 4-8

3. If the span or distance indicates from center to outer side of the posts, the length of the girder is equal to the span plus one half the width of the post.

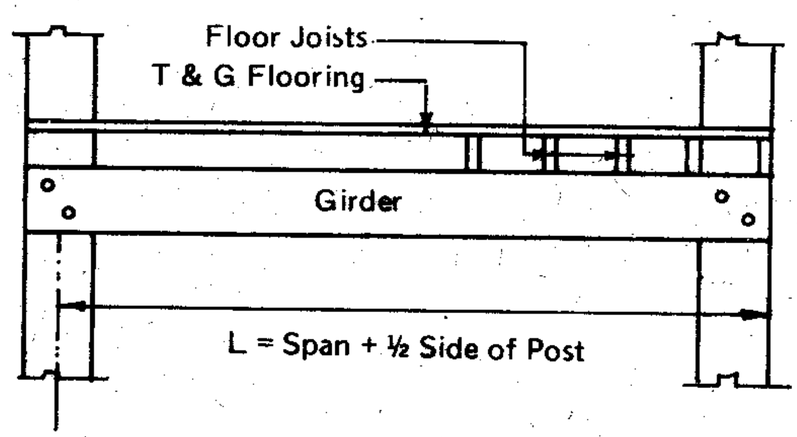

FIGURE 4-9

4. If the span or distance of the post indicates inside measurement, the length of the girder is equal to the span plus the two width or sides of the post.

5. If the second storey has an overhang floor wherein the girder has to carry the floor joists, the length of the girder is equal to the span as stated above plus the overhang length.

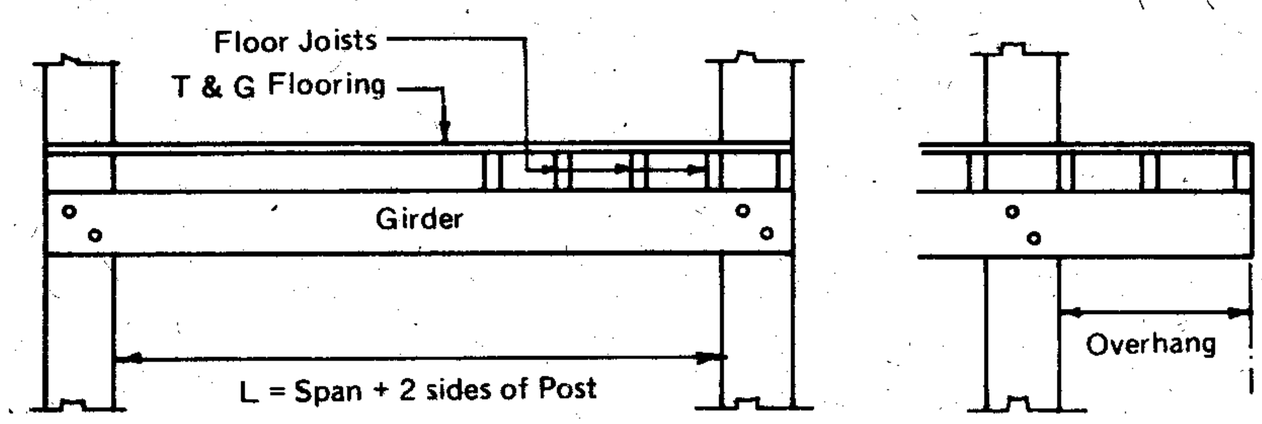

FIGURE 4-10

Illustration 4-6

From Figure 4-11 what girder length shall be ordered?

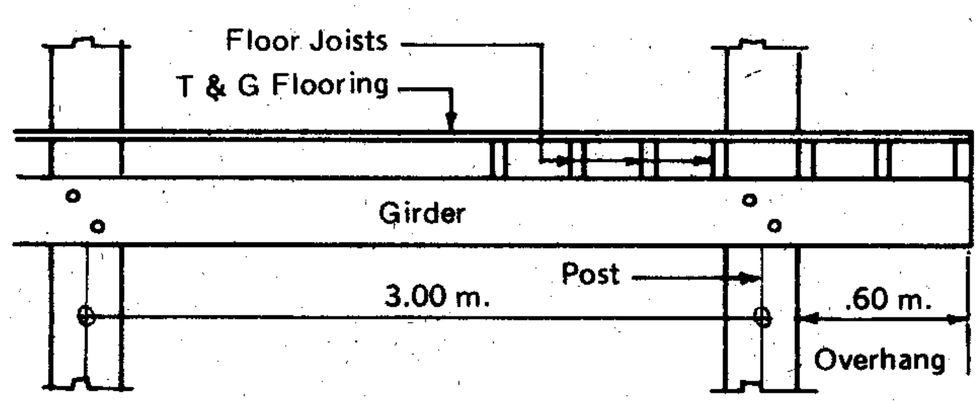

L = Span + Overhang + 2(½ Side of Post)

FIGURE 4-11

Solution

1. Determine the span and the overhang.
   3.00 + .60 = 3.60 m.

2. Add the width of the two posts
   3.60 + 2(.15) = 3.90 m.

3. Convert to feet
   $\frac{3.90}{.30}$ = 13 ft. This is an odd number, adjust to the next even number.

4. Order: 14 ft. long

4-10 FLOOR JOIST AND T & G FLOORING

Floor Joist is the structural member of a building that carries the wood flooring. The best way of estimating floor joist is by direct counting method based from the detailed floor framing plan of the building wherein the actual number and length of the joist could be determined accurately.

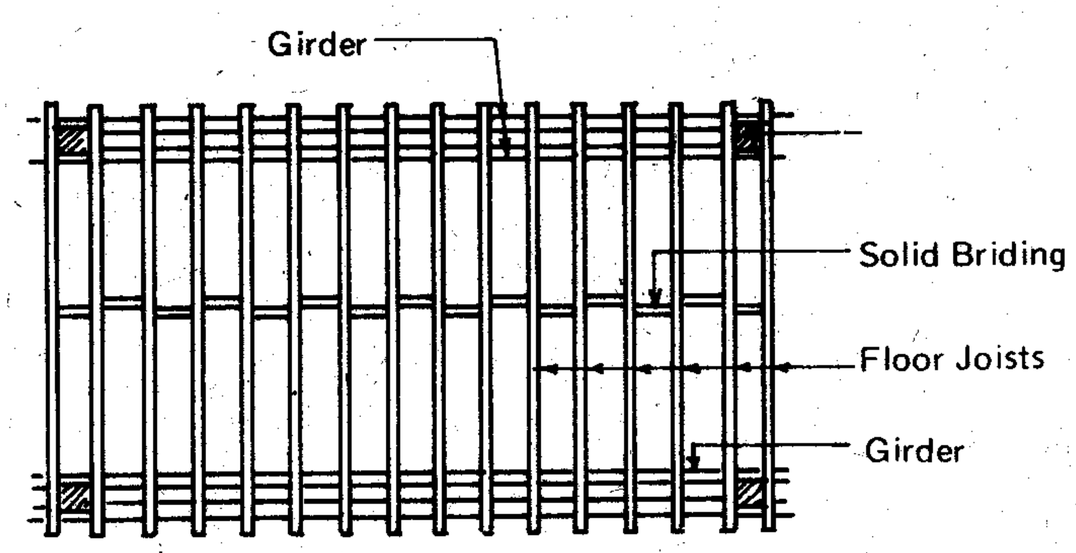

FIGURE 4-12

The **T & G** is the popular name for Tongue and Groove wooden board used for flooring, ceiling, forms etc. The thickness varies from 18 mm to 25 mm while its width also varies from 5 to 15 cm. Other sizes for Architectural purposes could be made and obtained through special order.

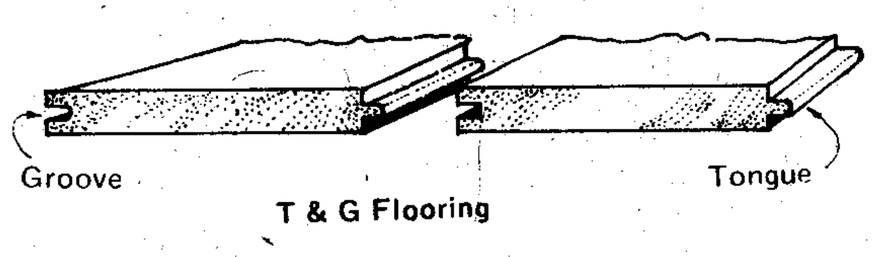

FIGURE 4-13

There are two methods presented in this Chapter on how to determine the required number of pieces and board feet of T & G for a given area.

1. Direct counting method
2. The number of pieces per meter run

TABLE 4-1 QUANTITY OF T & G BOARD PER METER RUN

SIZE OF BOARD in inches	SIZE OF BOARD in mm	DIRECT COUNTING METHOD ADDITIONAL % FOR TONGUE AND SHRINKAGE	NO. OF BOARD per meter run
1 x 3	20 x 75	1.250	16.66
1 x 4	20 x 100	1.222	12.20
1 x 5	20 x 125	1.167	9.34
1 x 6	20 x 150	1.153	7.70

Illustration 4-7

From the floor framing plan as shown in Figure 4-14, determine the number and board foot of floor joist and the T & G flooring.

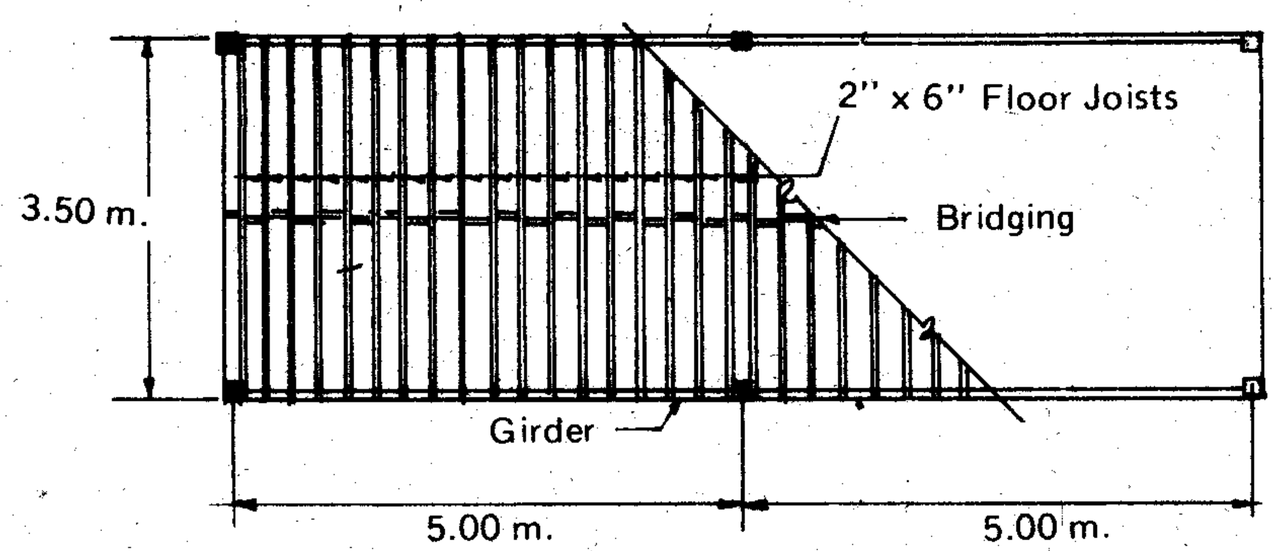

FIGURE 4-14

Solution

A. Floor Joist

1. By Direct Counting

$$\frac{5.00}{.30} = 16.66$$

2. Add one to get the actual number of joists
   16.66 + 1 = 17.66 say 18 pcs.

3. For two spans
   18 x 2 = 36 pcs.

4. Determine the span of the joist in feet

$$\frac{3.50}{.30} = 11.66 \text{ say } 12 \text{ ft.}$$

Order: 36 pcs. 2" x 6" x 12 ft. = 432 bd. ft.

B. **Solid Bridging**

1. Span of girder

$$\frac{5.00}{.30} = 16.66 \text{ ft.}$$

2. Total number of joists
   18 x 2 inches thickness
   = 36 inches or 3 feet

3. Subtract from step 1
   16.66 – 3 ft. = 13.66 ft.

4. For solid bridging
   Order: 2 pcs. 2" x 6" x 14 ft. = 28 bd. ft.

C. **T & G Flooring**

1st Solution: By Direct Counting

1, The length of the girder is the length of the T & G flooring

$$\frac{5.00}{.30} = 16.66 \text{ say } 18 \text{ ft.}$$

2. Determine the number of 4" (.10 m.) T & G Board

$$\frac{3.50}{.10} \times 2 \text{ span} = 70 \text{ pcs.}$$

3. Referring to Table 4-1
   Multiply:
   70 x 1.222 = 85.54 say 86 pcs.

4. Order: 86 pcs. 1" x 4" x 18" T & G
   = 516 bd. ft.

2nd Solution: By the number of board per meter run

1. Determine the length of T & G flooring

$$\frac{5.00}{.30} = 16.66 \text{ say } 18 \text{ ft.}$$

2. Referring to Table 4-1 using 4" (.10 m.) T & G
   Multiply:
   7.00 x 12.20 = 85.4
   say 86 pcs. 1" x 4" x 18'
   = 516 bd. ft.

4-11 SIDING WOOD BOARD

The common commercial siding wood boards are:

1. Stone cut
2. Double Stone cut
3. V-cut
4. BCB Cut
5. Weather cut, etc.

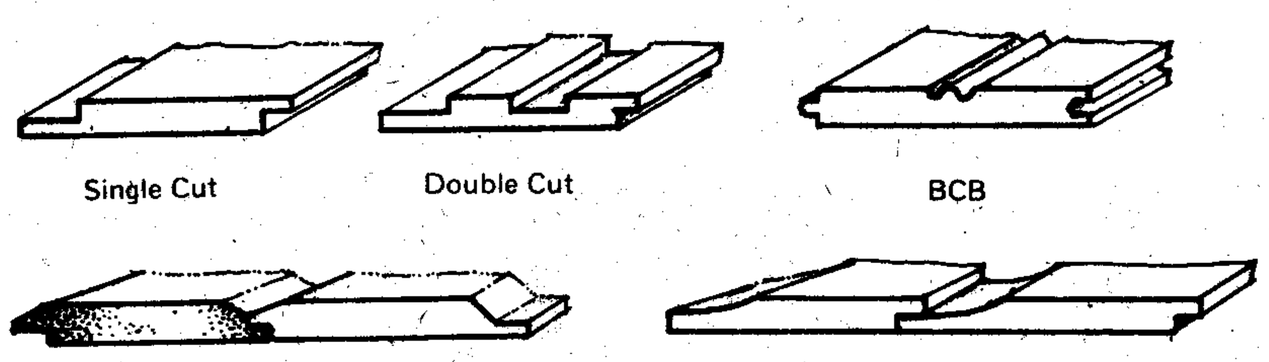

FIGURE 4-15

The thickness of these boards varies from 13, 16 or 20 mm. and the width from 15 to 20 cm. of even length from 1.80 to 6.00 meters or 6 to 20 feet.

The procedure in estimating the quantity of siding wood board is the same as that of the T & G wood flooring with the aid of Table 4-2. However, unlike the T & G wood flooring, the siding board estimate has to consider the following factors:

1. The area of the opening such as windows, doors and the like should be deducted from the area of the wall to be covered by the siding boards.

2. The length of the siding wood board should be specified in the order to prevent joints of the board in between the span or height.

3. The common error in determining the length or height of the board is the omission of the additional length for the girts, flooring, floor joist and girder length.

TABLE 4-2 QUANTITY OF SIDING WOOD BOARD

COMMERCIAL SIZE		NO. OF BOARD PER Meter Run	APPROX. BD. FT. per sq. m.
mm	inches		
150	6	7.41	13.65
200	8	5.55	13.55

Illustration 4-8

From Figure 4-16 solve for the required board foot and number of 200 mm (8") double cut siding board.

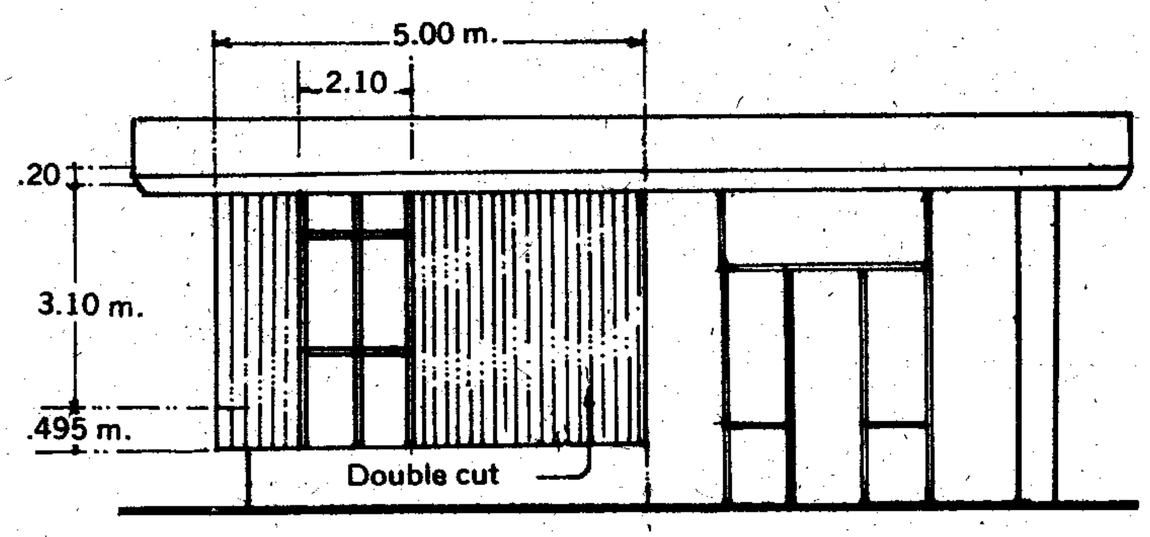

FIGURE 4-16

Solution

1. Determine the total length of the board

Floor to ceiling	=	3.10 m.
Depth of Girts	=	.20 m.
Flooring & Joist	=	.17 m.
Depth of Girder	=	.25 m.
Studs	=	.075 m.
		3.795 m. or 12.65 ft.

Total length say 14 feet

2. Length of the wall = 5.00 m.
   Less the Opening = 2.10 m.
   Net Wall Length = 2.90 m.

3. Referring to Table 4-2 for a 200 mm. board
   Multiply:
   2.90 x 5.55 = 16 pcs.

4. Order: 16 pcs. ¾" x 8" x 14' double cut
   = 149 bd. ft.

2nd Solution: By the Board Foot per Square Meter

1. Solve for the wall area
   A = 3.795 x 2.90
   A = 11 sq. m.

2. Referring to Table 4-2
   Multiply:
   11 x 13.55 = 149 bd. ft.

4-12 GIRTS, RAFTERS, TRUSS, PURLINS AND FASCIA BOARD

These items in building construction are determined by direct counting and measuring method. Members with shorter length like collar. plate, struts, blocks for splice of joints, sway bridging etc. are computed according to their sizes combined together and adjusted to the commercial length of lumber. For accuracy of estimating these items, a detailed drawing indicating their sizes and length shall be made as basis in finding the unit length of every parts.

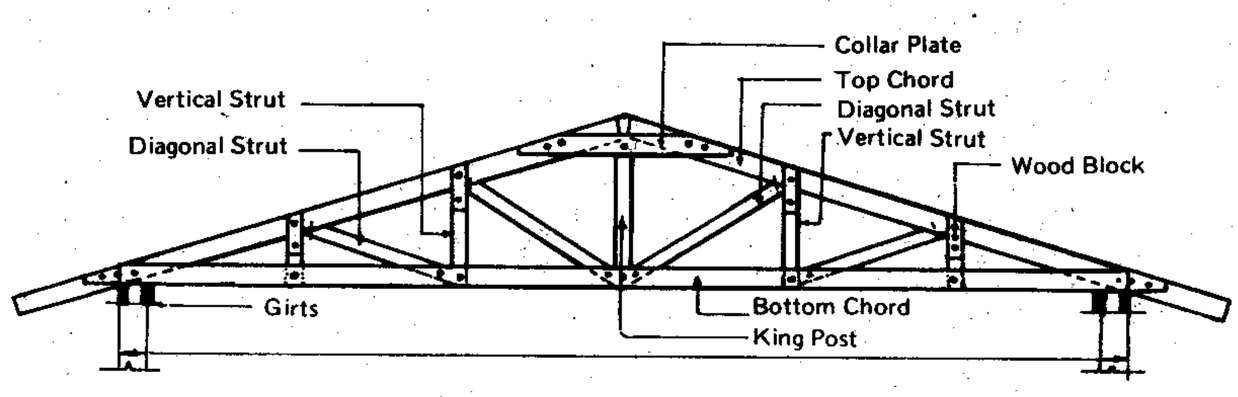

FIGURE 4-17

4-13 STUDS

Stud is the structural member in building construction where the siding of partition boards are nailed. It is sometimes called the **ribs** of wooden walls or partitions. Lumber intended for studs shall be straight and uniform in width either s2s or s4s for uniformity and quality of the finished work.

The advantages of using s2s or s4s lumber are:

1. Lumber are straight, uniform in thickness and of good quality.

2. It is economical in terms of labor cost.

3. The work progress is not affected or delayed.

There are two methods presented in this Chapter on how to find the quantity of studs at a given vertical and horizontal spacing.

The Direct Counting Method is done by counting the number of vertical and horizontal member from a detailed plan including its length. In the absence of a detailed drawing plan, an imaginary counting through mathematical computation will do as an alternative.

The Square Meter or Area Method is simply finding the area of the wall multiplied by the values given in Table 4-3 corresponding to the size and spacing of the studs.

Illustration 4-9

A wall partition 6.00 meters long by 2.60 meters high specify a 2" x 4" studs spaced at .60 m. o.c. both ways half lap joints. Find the total board feet required.

Solution: By Direct Counting

1. Find the number of vertical studs

$$\frac{6.00}{.60} = 10 + 1 = 11 \text{ pcs. @ 10 ft.}$$

2. Horizontal Studs

$$\frac{2.50}{.60} = 4.2 \text{ say 5 pcs. @ 20 ft.}$$

3. Order:

Vertical Studs	11 pcs.	2"	x 4"	x	10'	= 73.3 bd.ft
Horizontal Studs	5 pcs.	2"	x 4"	x	20'	= 66.6 bd.ft.
			Total			139.9 bd.ft.

Solution: By the Area Method

1. Solve for the area of the wall partition

   6.00 x 2.50 = 15 sq. m.

2. Referring to Table 4-3, using 2 x 4 at .60 m. spacing Multiply:

   15 x 9.333 = 140 bd. ft.

Comment

It will be noted that the computation by the area method with the aid of Table 4-3 instantly gave the result in terms of board foot, unlike the first solution wherein the number of pieces and the length were known outright ahead of the total board feet. However, as to which method will be adopted, depends upon the convenience and purpose of the estimator.

There are instances wherein small discrepancies arises between the result of the two methods due to the adjustment of lumber to the commercial length from odd to even number. Naturally, the number of board feet. will increase while the area to be covered remains the same. Under this circumstances small discrepancies between the result of the direct counting and the area method could be possible but to a negligible amount.

TABLE 4-3 NUMBER OF BOARD FOOT OF STUDS AND NAILING JOIST PER SQ. M.

LUMBER SIZE	SPACING IN METERS CENTER TO CENTER				
	.30 x .30	.30 x .60	.40 x .40	.40 x .60	.60 x .60
1 x 2	4.230	3.256	3.208	2.771	2.333
2 x 2	8.460	6.513	6.417	5.445	4.667
2 x 3	12.688	9.769	9.625	8.312	7.000
2 x 4	16.920	13.026	12.833	11.083	9.333
2 x 5	21.146	16.282	16.042	13.854	11.667
2 x 6	25.375	19.539	19.250	16.625	14.000

Illustration 4-10

A partition wall measures 8.00 m. long by 2.70 meters high specify the use of 2" x 3" studs with a general spacing at .40 m. for vertical and .60 m. for horizontal center to center distance.

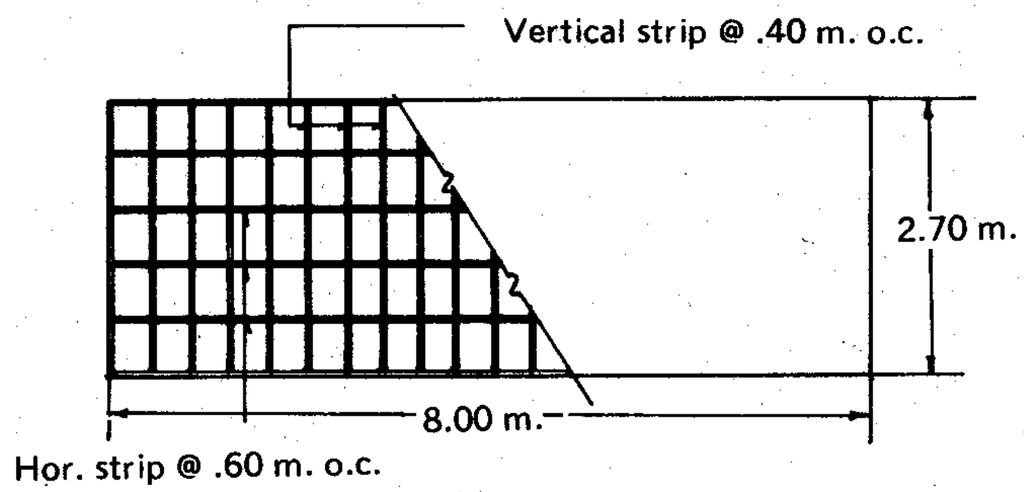

FIGURE 4-18

1st Solution: By Direct Counting

1. Find the vertical studs

   $\frac{8.00}{.40}$ = 20 spacing

   Add one to get the actual number of studs (See Figure 4-18)

   20 + 1 = 21 studs

   Order: 21 pcs. 2" x 3" x 10' = 105 bd. ft.

2. Find the horizontal studs

   $\frac{2.70}{.60}$ = 4.5

   Add one (1) to get the actual number of studs

   4.5 + 1 = 5.5 pcs. at 4.00 m.

   Since the wall is 8.00 m. long, multiply:

   5.5 x 2 = 11 pcs.

   Order: 11 pcs. 2" x 3" x 14' = 77 bd. ft.

Summary

21 pcs. 2" x 3" x 10'	=	105 bd. ft.
11 pcs. 2" x 3" x 14'	=	77 bd. ft.
Total	=	182 bd. ft.

2nd Solution: By the Area Method

1. Solve for the area of the wall partition
   8 x 2.70 = 21.6 sq. m.

2. Referring to Table 4-3 using 2 x 3 at .40 x .60 m. on center spacing
   Multiply:
   21.6 x 8.312 = 179.54 say 180 bd. ft.

3. Note the difference of 2 bd. ft. between the two solutions which is negligible.

4-14 CEILING JOIST

Ceiling Joist is a structural member in building construction that holds the ceiling board, otherwise known as **the nailing strip.** The common size used are 1 x 2; 2 x 2; or 2 x 3 lumber spaced to suit the size of the ceiling board. In short, the ceiling board dimension dominates the spacing of the ceiling joist for economy. The methods adopted in computing the quantity is the same as that of the studs with the aid of Table 4-3

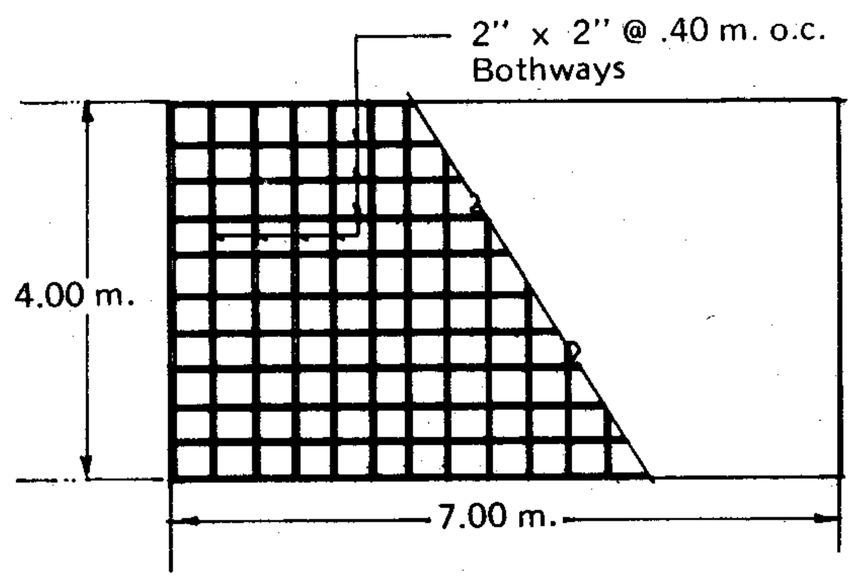

FIGURE 4-19

Illustration 4-11

Find the total board foot required for a 7.00 by 4.00 meters bedroom using 2" x 2" ceiling joist spaced at .40 x .40 m. on center.

Solution by Direct Counting

1. Find the number of joist perpendicular to 7.00 meters.

   $\frac{7.00}{.40} = 17.5 + 1 = 18.5$ say 19 pcs. at 4.00 m. or 14 ft.

2. Find the number of joist perpendicular to 4.00 m. span

   $\frac{4.00}{.40} = 10 + 1 = 11$ pcs. at 7.00 m. or 23 feet

   A combination of:
   11 pcs. 2" x 2" x 14' and
   11 pcs. 2" x 2" x 10' or
   22 pcs, 2" x 2" x 12'

3. Order:
   19 pcs. 2" x 2" x 14' = 88.66 bd. ft.
   22 pcs. 2" x 2" x 12' = 88.00 bd. ft.
   176.66 bd. ft.
   say 177 bd. ft.

Solution by the Area Method

1. Area of the ceiling
   7.00 x 4.00 = 28 sq. m.

2. Referring to Table 4-3
   28 x 6.417 = 179.7 say 180 bd. ft.

3. Note the 3 bd. ft. negligible difference.

4-15 CEILING BOARD

There are numerous kinds of ceiling board of different quality and dimensions used in building construction. The simplest way of finding the number of boards required is to divide the area of the ceiling by the effective covering area of each board or by the square meter area method with the aid of Table 4-4

Illustration 4-12

A bedroom with a general dimension of 4.00 m. by 5.00 meters specifies the use of 6 mm by 1.20 m. by 2.40 meters plywood for ceiling on a 2 x 2 ceiling joist spaced at .40 m. x .60 m. o.c. Find the number of plywood and the board foot of the ceiling joist required.

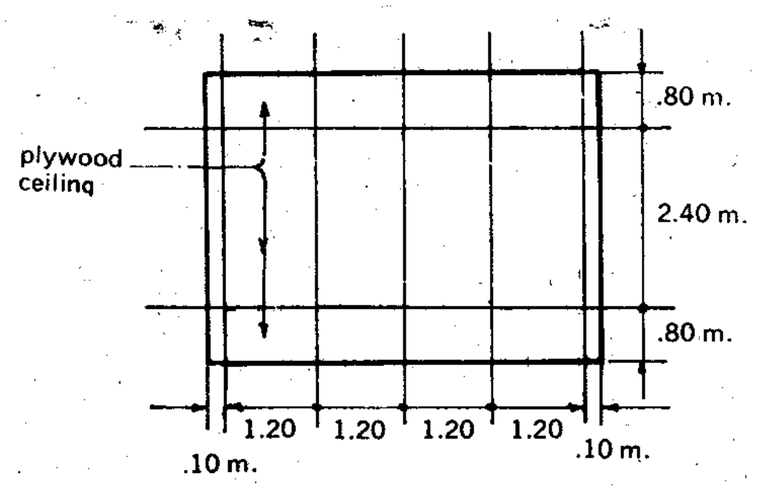

FIGURE 4-20

Solution

A. Ceiling Joist

1. Find the area of the ceiling
   4.00 m. x 5.00 m. = 20 sq. m.

2. Referring to Table 4-3
   Multiply:
   20 x 5.445 = 108.90 say 109 bd. ft.

B. Ceiling Board

1. Find the area of the ceiling
   4.00 m. x 5.00 m. = 20 sq. m.

2. Referring to Table 4-4

$$\frac{20}{2.88} = 6.9 \text{ say 7 pcs. } 1.20 \times 2.40 \text{ plywood}$$

TABLE 4-4 QUANTITY OF CEILING BOARD PER SQUARE METER

SIZES in m.	EFFECTIVE COVERING Sq. m.	NUMBER OF PIECES per sq. m.
.30 x .30	0.09	11.111
.40 x .40	0.16	6.250
.40 x .60	0.24	4.167
.60 x .60	0.36	2.778
.60 x1.20	0.72	1.389
.90 x 1.80	1.62	0.617
1.20 x 2.40	2.88	0.347

Illustration 4-13

An office room with a general dimensions of 6.00 m. x 9.60 meters specify the use of a .60 x 1.20 m. ceiling board. Find the number of pieces required.

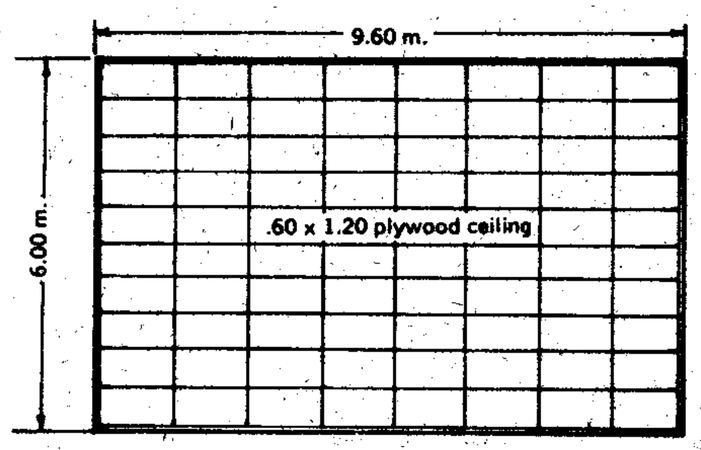

FIGURE 4-21

1st Solution: By the Effective Covering Area Method

1. Find the area of the ceiling
   6.00 x 9.60 m. = 57.6 sq. m.

2. Referring to Table 4-4 using a .60 x 1.20 board
   $\frac{57.6}{.72}$ = 80 pcs.

2nd Solution: By the Number of Pieces per Square Meter

1. Find the area of the ceiling
   6.00 x 9.60 = 57.6 sq. m.

2. Referring to Table 4-4 using a .60 x 1.20 board
   Multiply:
   57.6 x 1.389 = 80 pcs.

3rd Solution: By the Direct Counting Method

1. Find the number of boards along the 6.00 m.
   $\frac{6.00}{.60}$ = 10 pcs.

2. Find the number of board along the 9.60 m.
   $\frac{9.60}{1.20}$ = 8 pcs.

3. Multiply results of 1 and 2
   10 x 8 = 80 pcs.

Comment:

The result of the three methods as presented are correct and satisfactory if the ceiling area falls under the following conditions:

1. That the quotient in dividing the area of the ceiling by the effective area covering of one board yields an exact number or value (no fraction).

2. That the ceiling is plain and not interrupted by beams, girders, rafters, partitions, opening, etc.

3. That the ceiling has no intricate design or decorations that requires cutting of the ceiling board.

When cutting of the ceiling boards could not be avoided wastage is also inevitable but could be replenished by an allowance factor of about 2 to 5 percent.

Illustration 4-14

A living room measures 6.80 m. x 8.00 m. specify the use of a .90 x 1.80 m. ceiling board. Find the number of pieces required.

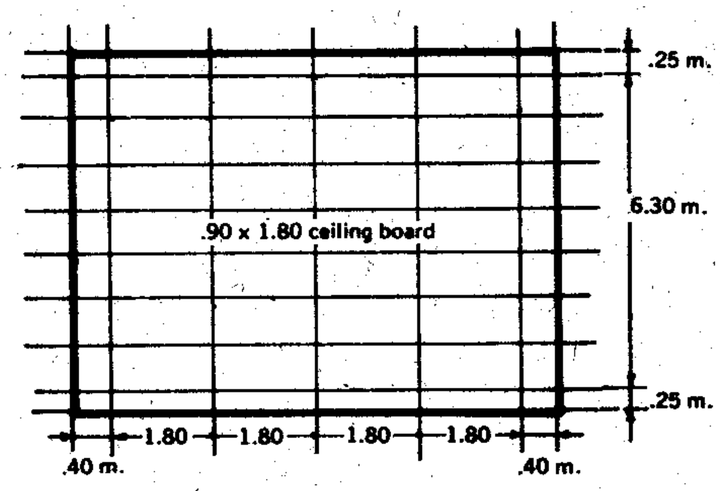

FIGURE 4-22

1st Solution: By the Effective Covering Area Method

1. Find the area of the ceiling
   6.80 x 8.00 = 54.40 sq. m.

2. Referring to Table 4-4 using a .90 x 1.80 ceiling board

$$\frac{54.40}{1.62} = 33.58 \text{ say } 34 \text{ pcs.}$$

2nd Solution: By the Number of Pieces per Sq. M.

1. Find the area of the ceiling
   6.80 x 8.00 = 54.40 sq. m.

2. Referring to Table 4-4
   Multiply:
   54.40 x .617 = 33.56 say 34 pcs.

3rd Solution: By the Direct Counting Method

1. Find the number of boards along the 6.80 m. side

$$\frac{6.80}{1.80} = 3.78$$

2. Find the number of boards along the 8.00 m. side

$$\frac{8.00}{.90} = 8.89$$

3. Multiply 1 and 2
   3.78 x 8.89 = 33.60 say 34 pcs.

4-16 DOOR FRAME

Estimating the materials for fabrication of door frame is simply determining the size and length of the lumber to suit the size of door panel whose width varies from .60 m. to 1.00 meter wide. Door frame bigger than one meter opening is considered as special design and order.

In ordering lumber for door frame, the estimator has two options:

1. Ordering one length of 18 ft. for each door jamb or a
2. Combination of headers or jamb and header to suit the commercial length of lumber for economic reasons.

Illustration 4-15

A school building has 20 classroom with 2 doors per room specify the use of 3" x 6" door jamb. Prepare an order list of lumber for fabrication of the door jamb.

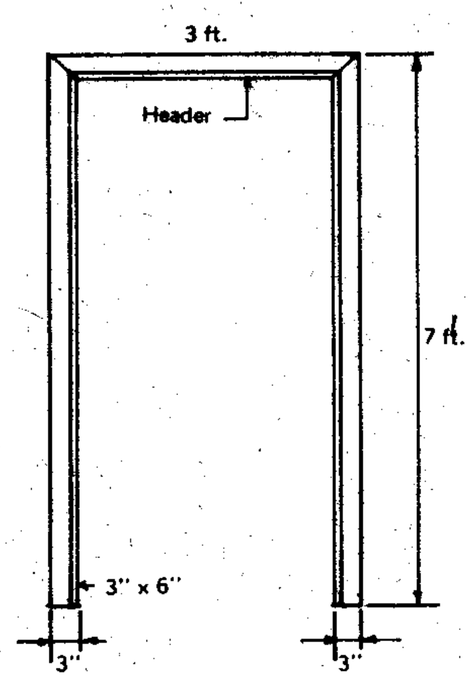

FIGURE 4-23

Solution

A. Ordering one length for each jamb

1. Determine the total length of the jamb and header
   Jamb = (7' + 3") x 2
   = 14' - 6" or 14.5 ft.

2. Length of Header
   (3 ft. + 6 In.) = 3' - 6" or 3.5 ft.

3. Total length = 18.0 ft.

4. Order: 40 pcs. 3" x 6" x 18' = 1,080 bd. ft.

B. Combination of Headers and Jambs

1. One header is 3' - 6" or 3.5 ft.

2. Four Headers = 14 feet

3. For 40 Headers
   Order: 10 pcs. 3" x 6" x 14'

4. Jambs = (7" + 3") x 2 sides = 14' - 6"
   or 14.5 ft.

5. Lumber length is even number for 40 jambs
   Order: 40 pcs. 3" x 6" x 16'

6. Summary:
   Header: 10 pcs. 3" x 6" x 14' = 210 bd. ft.
   Jamb: 40 pcs. 3" x 6" x 16' = 960 bd. ft.
   1,170 bd. ft.

Comment:

Comparing the result of the two procedures, it will be noted that the second procedure is 90 board feet more than the result of the first one, considering the high cost of lumber now a days, one has to choose the order of 40 pcs. at 18 ft. long. However, in ordering the length from 18 feet and above the following disadvantages might be encountered:

1. Due to the scarcity of lumber, those of length from 18 feet and above might not be available in the market and this might cause delay of the construction work.

2. The price of lumber usually varies and goes higher as the length goes longer. The cost of the 90 board feet difference between the two procedures might not compensate with the difference in cost per board foot if shorter length is ordered.

In adjusting the ordered length from 14' - 6" to 16 feet (see step 4) there is an excess length of 40 pcs. one and one half feet or 45 cm. which could be used on other parts of the construction or they could be sliced for studs or ceiling joist which then could not be totally considered as waste.

4-17 WINDOW FRAME

The different parts of a window frame to be considered in estimating are:

1. Jamb
2. Header
3. Window Sill
4. Mullion
5. Transom

Estimating Procedure

1. To find the length of the jamb, add the thickness of the sill, the mullion and the header.

2. The length of the sill and header shall include the thickness of the two jambs and the mullion.

3. The transom is equal to the length of the sill or header less the thickness of the two jambs.

4. The length of the mullion is equal to the length of the jambs less the thickness of the head and sill

Illustration 4-16

From Figure 4-24 prepare the list of the lumber materials to be ordered.

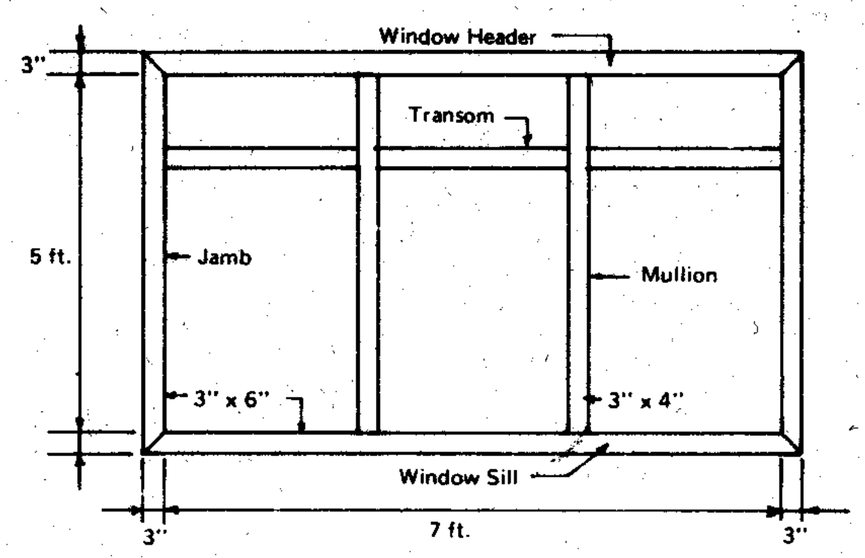

FIGURE 4-24

Solution

1. Jamb: (5' + 6") x 2 = 11 feet
   Order: 1 pc. 3" x 6" x 12 ft.

2. Header & Sill: (7' + 6") x 2
   Order: 2 pcs. 3" x 6" x 8 ft. or
   1 pc. 3" x 6" x 16 ft.

3. Mullions: (5' - 0") x 2
   Order: 1 pc. 3" x 4" x 10 ft.

4. Transom: (7' - 0")
   Order: 1 pc. 3" x 6" x 8 ft.

FORMS, SCAFFOLDING AND STAGING

5-1 FORM

Form is a temporary boarding, sheating or pan used to produce the desired shape and size of concrete. The structural members of a building are built-up into its desired shape and dimension through the use of forms which serve as mould for the mixed concrete.

Concrete mixture is generally semi-fluid that reproduces the shape of anything into which it is poured. Concrete forms should be water tight, strong enough and rigid to sustain the weight of the concrete. It should be simple and economically designed in such a manner that they are easily removed and reassembled without damaged to themselves or to the concrete.

Selection of forms are based from:

1. Cost of the materials.
2. The construction and assembling cost.
3. The number of times it could be used.
4. Strength and resistance to pressure and tear and wear.

Classification of Forms:

A. Materials
   1. Wood
   2. Metal
   3. Plastic
   4. Composite

B. Shape
   1. Straight
   2. Circular, etc.

C. Solid or Hollow Cast
   1. Single
   2. Double

D. Methods of Construction
   1. Ordinary
   2. Unit

E. Uses
   1. Foundation and column
   2. Wall
   3. Steps
   4. Beams and girders
   5. Slabs
   6. Sidewalks, etc.

F. Construction of Forms consist of
   1. Retaining board
   2. Supporters or studs
   3. Braces
   4. Spacer
   5. Tie Wire
   6. Bolts and nails

G. Types of Wall Form
   1. Continuous
   2. Full unit
   3. Layer unit
      a. Continuous
      b. Sectional

5-2 GREASING OF FORMS

The purpose of greasing the form is to make the wood water proof thus preventing the absorption of water in the concrete which causes swelling and warping. Greasing of forms also prevent adherence of concrete to the pores of the wood.

Crude oil is the most economical and satisfactory material for this purpose. The crude oil is mixed with No. 40 motor oil to a proportion of 1:3 mixture with varying viscosity according to the temperature wherein thicker mixture is necessary on warm weather. Greasing of forms should not be done after the steel bars have been set to its position.

5-3 SCAFFOLDING AND STAGING

Scaffolding is a temporary structure of wooden poles and planks providing platform for working men to stand on while erecting or repairing a building. It is further defined as a temporary framework for other purposes. Staging is a more substantial framework progressively built up as tall building rises up. The term staging is applied because it is built up in stages one storey at a time.

Numerous accidents in building construction usually happened because of faulty construction method and insufficient

supports and braces. One tragic incident that happened very recently at the Film Place in Metro Manila where several lives including the Supervising Engineer were buried in cement and rubbles when the forms and staging swayed and rammed down in total collapse.

Staging is not as simple as others think of it. It requires special attention, training and experienced men to do the work. Accordingly, the primary cause of accidents and failure of the framework is brought about by the use of inferior quality lumber, inadequate supports and braces, nails and others for economy sake. Definitely, out lumber has no place in scaffolding or staging work if the builder is aware of the value of life and property involved in building construction. Lumber intended for temporary structure to support heavy load such as concrete should be selected from straight grain of wood free from shakes or knots and other defects.

The different parts of staging are:

1. Vertical support
2. Footing base (as need arises)
3. Horizontal braces
4. Blocks and wedges support
5. Nails

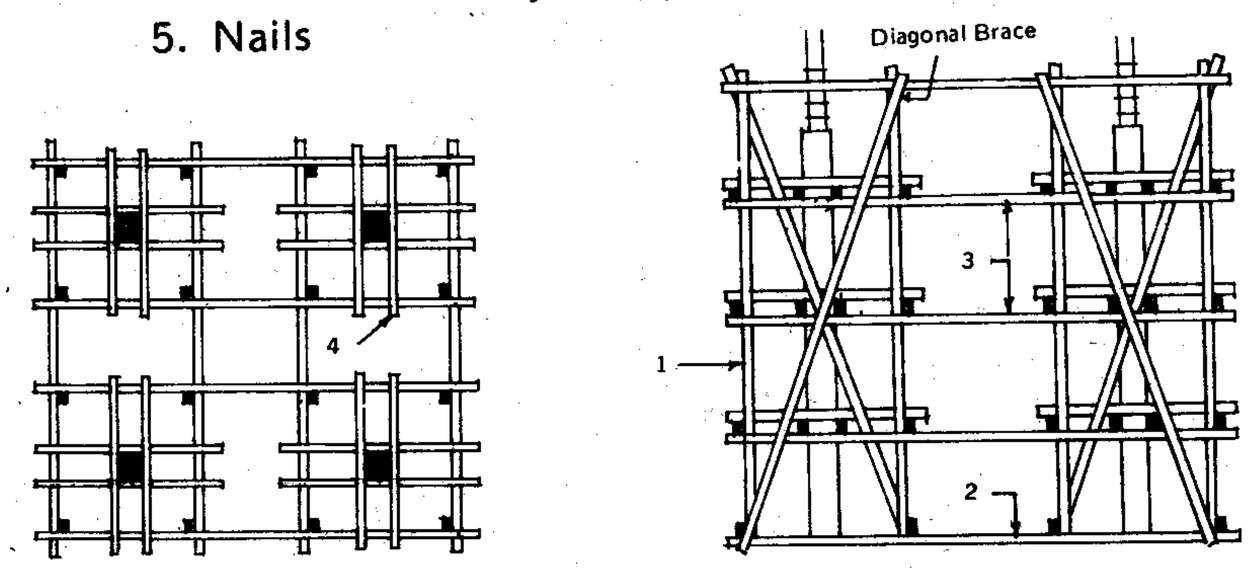

FIGURE 5-1

5-4 COMPARATIVE ANALYSIS BETWEEN THE T & G AND PLYWOOD AS FORMS

Cost is the primary consideration in selecting the kind of materials to be used as form. Cost is a broad term in construction which refers to the initial investment in purchasing the materials including the construction and assembling cost, the number of times it could be used and the durability of the material to resist pressure and tear and wear.

Illustration 5-1

A residential house has 10 wooden posts resting on a concrete footing as shown in Figure 5-2. Prepare a comparative bill of materials using T & G and plywood forms.

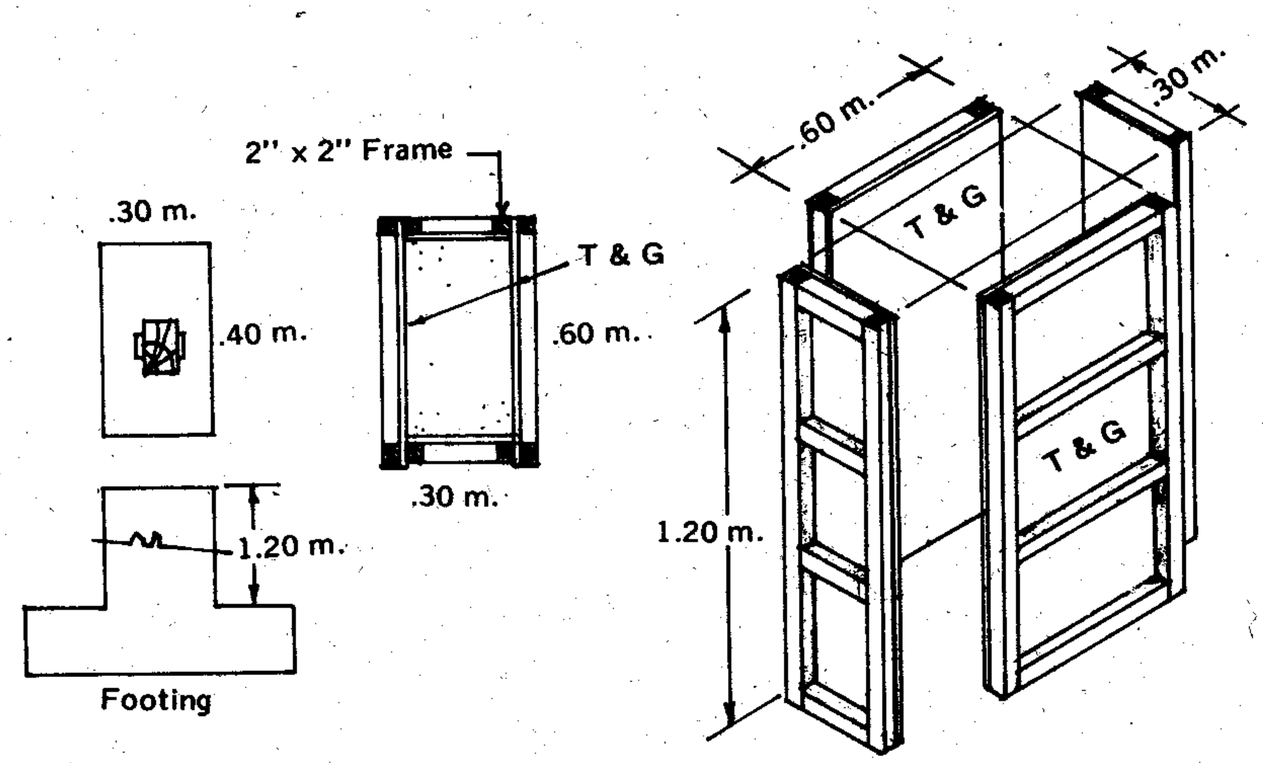

FIGURE 5-2

Solution: Using T & G Board

a) Using a 1" x 6" T & G Board

1. Solve for the lateral width of one footing.

   (.30 x 2) + (.40 x 2)
   .6 + .8 = 1.40 m.

2. Referring to Table 4-1

   1.40 x 7.70 = 10.78 say 11 pcs.

3. For 10 posts prepare 5 forms only

   11 x 5 = 55 pcs.

4. Determine the height of the form

   1.20 m. = 4 feet

5. Order:

   55 pcs. 1" x 6" x 4' or
   28 pcs. 1" x 6" x 8' = 112 bd. ft.

b) Form Ribs or Frame @ .40 m. distance
Form A

1. .30 x 8 pcs. = 2.40 or 8 ft.
   1.20 x 4 pcs. = 4.80 m. or 16 ft.

2. For 5 forms
   Order:
   5 pcs. 2" x 2" x 8'
   5 pcs. 2" x 2" x 16'

Form B

1. .60 x 8 pcs. = 4.80 or 16 ft.
2. For 5 forms
   Order:
   5 pcs. 2" x 2" x 16'

c) Brace Holder and Stake

1. By direct counting from the figure we have:

   4 pcs. 2" x 2" x 8'

Summary for Five Footings

28 pcs.	1" x 6" x 8' T & G Board	= 112 bd. ft.
9 pcs.	2" x 2" x 8'	= 72 ln. ft.
10 pcs.	2" x 2" x 16'	= 160 ln. ft.

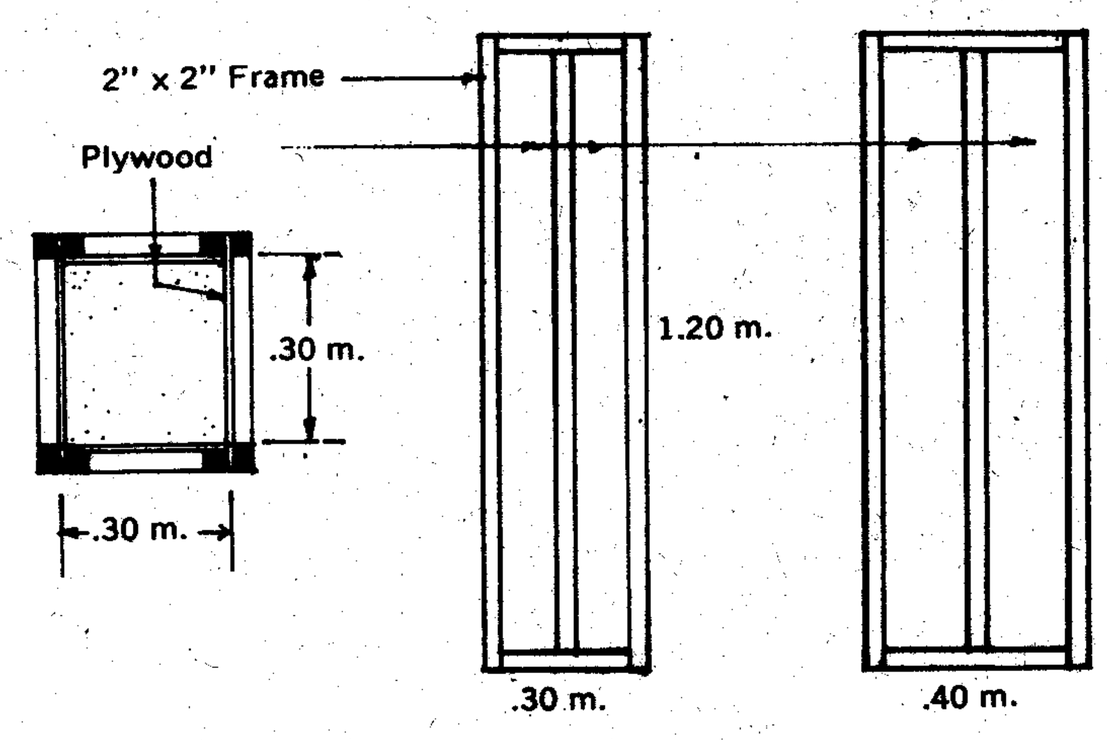

FIGURE 5-3

2nd Solution

a) Using plywood forms

1. The total lateral width of one form = 1.40 m.
2. Length or Height of the form = 1.20 m.
3. Area of one form

   1.40 x 1.20 = 1.68 sq. m.

4. Total area of 5 forms

   1.68 x 5 = 8.40 sq. m.

5. Referring to Table 4-4 using 1.20 x 2.40 plywood by effective covering.
   Divide:

   $$\frac{8.40}{2.88} = 2.92 \text{ say 3 pcs. plywood}$$

b) Forms or Ribs
   Form A

1. By direct counting

   6 pcs. 2" x 2" x 1.20 m (4 ft.)
   4 pcs. 2" x 2" x .30 m. (1 ft.)

2. For 5 forms, we get:

   30 pcs. 2" x 2" x 4 ft.
   20 pcs. 2" x 2" x 1 ft.

3. Order:

   15 pcs. 2" x 2" x 8 ft.
   2 pcs. 2" x 2" x 10 ft.

Form B

1. By direct counting

6 pcs. 2" x 2" x 1.20 m. (4 ft.)
4 pcs. 2" x 2" x .40 m.

2. For 5 forms, we get:

30 pcs. 2" x 2" x 4 ft.
20 pcs. 2" x 2" x .40 m.

3. Order:

15 pcs. 2" x 2" x 8 ft.
5 pcs. 2" x 2" x 1.60 or 6 ft.

c) Brace Holder and Stake

1. By direct counting

4 pcs. 2" x 2" x 8 ft.

Summary for 5 Footings

3 pcs. 6 mm x 1.20 x 2.40 plywood		
30 pcs. 2" x 2" x 8'	=	240 ln. ft.
2 pcs. 2" x 2" x 10'	=	20 ln. ft.
5 pcs. 2" x 2" x 6'	=	30 ln. ft.
		290 ln. ft.

From the above results, knowing the materials required for T & G and plywood form, canvass the prices and make your choice as to what materials will be used.

TABLE 5-1 QUANTITY OF T & G FORM FOR PIERS AND COLUMNS IN BOARD FOOT PER SQUARE METER

MATERIALS	BD. FT. OF T & G per sq. m.	BD. FT. OF 2 x 2 Frame per sq. m.	LN. FT. per sq. m.
1" x 4" T & G	18.33	7.32	21.96
1" x 6" T & G	17.50	7.32	21.96

Note: To convert Bd. Ft. to Linear Ft. multiply by 3.
To convert Linear Ft. to Bd. Ft. divide by 3.

Illustration 5-2

Prepare the Bill of Materials required for 8 columns at 4 meters high with a uniform cross sectional dimension of 30 cm. x 40 cm. using 1" x 6" T & G form with 2" x 2" frame.

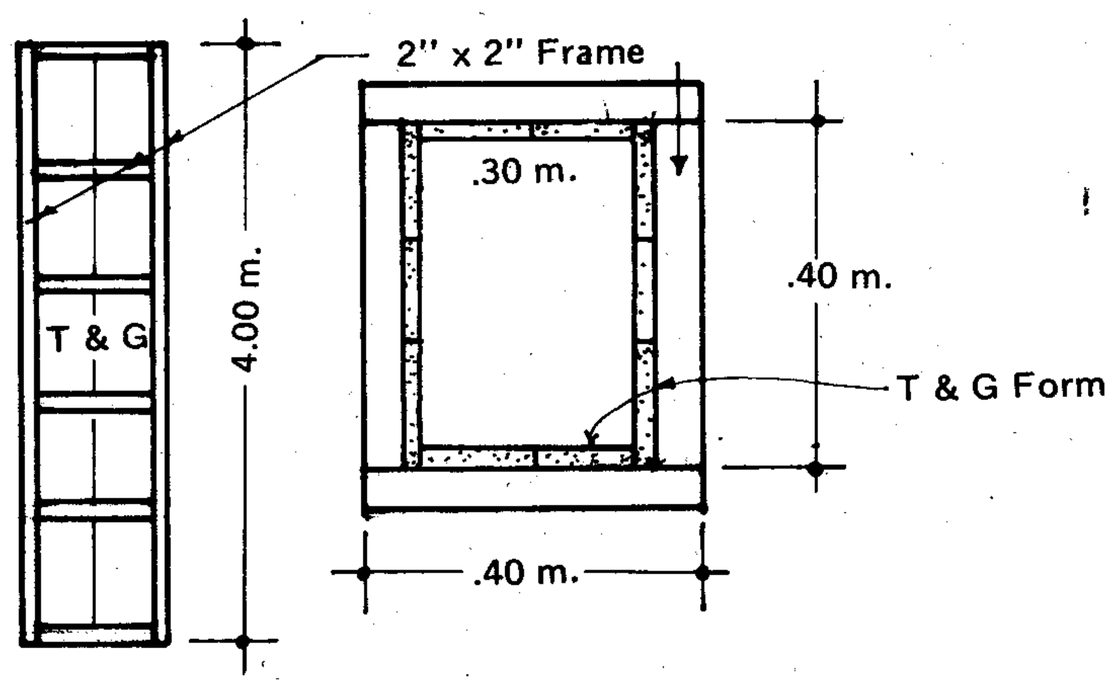

FIGURE 5-4

Solution

1. Find the lateral surface area of one column

   (.30 x 2) + (.40 x 2) x 4.00 m. ht.
   (.6 + .8) x 4.00 m. = 5.6 sq. m.

2. Referring to Table 5-1 using 1" x 6" T & G Board
   Multiply:

   5.6 x 17.50 = 98 bd. ft.

3. For 8 columns
   Multiply:

   98 x 8 = 784 bd. ft. 1" x 6" x 14'

4. Find the 2" x 2" frame for one form
   Referring to Table 5-1
   Multiply:

   5.6 x 7.32 = 41 bd. ft.

5. For 8 columns
   Multiply:

   41 x 8 = 328 bd. ft.

Comments

1. Illustration 5-1 is the direct counting method, one will notice the intricacies involved in itemizing the materials for the different parts of the form including the adjustment of the lumber to the commercial length for that simple

wooden footings. What if the estimate calls for the entire forms necessary to construct a multi-storey reinforced concrete building? Table 5-1 was prepared for this purpose and presented in illustration 5-2.

2. The 2 x 2 frame as found in illustration 5-2 does not include yet the vertical and horizontal support and the diagonal braces which will be discussed later in Section 5-8 under the scaffolding and staging.

5-5 FORMS USING PLYWOOD

Plywood is a versatile construction material not only used for walls, partitions and cabinets but also for furnitures as well as forms for reinforced concrete construction. The plywood thickness varies from 4 mm., 6 mm., 12 mm. and 20 mm. with a commercial size of .90 x 1.80 m. and 1.20 m. x 2.40 meters. Plywood as form has the following advantages:

1. It is economical as to labor cost
2. Light weight and handy
3. Smooth surface which requires less plaster or no plastering at all
4. Less consumption of nails

TABLE 5-2 QUANTITY OF PLYWOOD FORM AND ITS FRAME FOR COLUMNS PER SQ. M. LATERAL AREA

PLYWOOD size in m.	NO. OF PCS.	FRAME OR RIBS* IN BD. FT. PER SQ. M. 2 x 2	2 x 3
.90 x 1.80	.842	12.71	18.96
1.20 x 2.40	.488	12.71	18.96

* The values given under the frame or ribs column are computed from a longitudinal rib type considering its economical advantages.

Illustration 5-3

Six concrete posts of 4.00 m. high with a uniform cross sectional dimension of 30 by 30 cm. specify the use of 12 mm plywood on a 2" x 2" frame. Prepare the bill of materials.

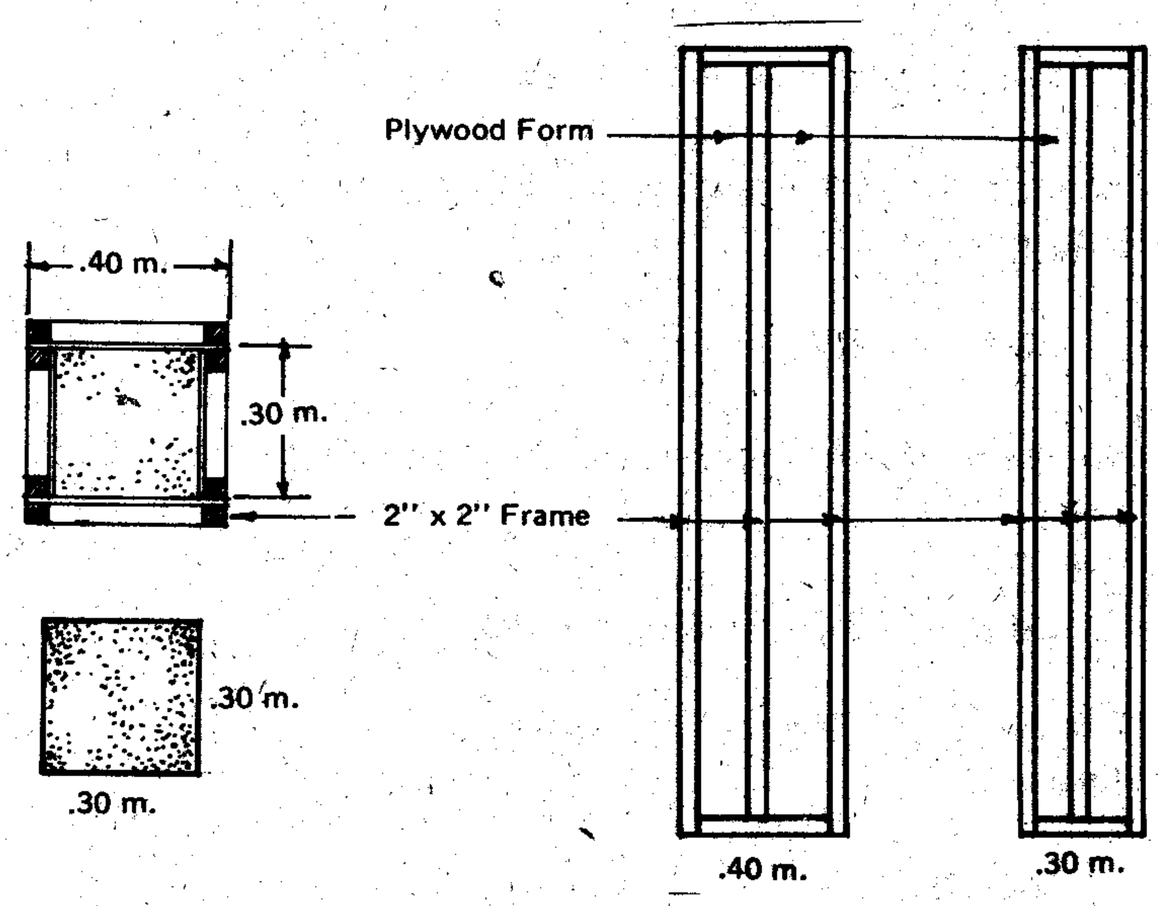

FIGURE 5-5

Solution

Data:

Number of Post	=	6
Height	=	4 meters
Cross Sectional Dimension	=	30 x 30 cm.
Frame	=	2" x 2"

SIMPLIFIED CONSTRUCTION ESTIMATE

1. Solve for the lateral surface area of one column.

   .30 x 4 sides = 1.20 m.

2. Multiply by the height.

   1.20 x 4.00 m. = 4.8 sq. m.

3. Total area for 6 columns

   4.8 x 6 = 28.8 sq. m.

4. Referring to Table 5-2 using 1.20 x 2.40 plywood
   Multiply:

   28.8 x .488 = 14 pcs.

5. Solve for the frame, from Table 5-2 using 2 x 2 lumber;
   Multiply:

   28.8 x 12.71 = 366 bd. ft.

6. The height of the post is the length of the frame
   Order:

   366 bd. ft. 2" x 2" x 14 ft.

5-6 FORMS OF CIRCULAR COLUMN

The galvanized Iron sheet otherwise known as G. I. sheet is the most common material used as form for circular, oval or eleptical structure considering its versatility in forming any curve of various shapes and design. Where G. I. sheet is specified

as form for a cylindrical column, wood board and built up supporters are necessary to form the circumferential arc frame. The standard dimension of the plain G. I. sheet is .90 m. wide by 2.40 meters long.

Estimating procedure:

1. Find the circumference of the circle

   where **C** = 3.1416 x diameter

2. Multiply the circumference by the column height.
3. Divide the result found in step 2 by 2.16, the effective covering area of one G. I. sheet.
4. Where extra cuts could not be avoided, an allowance of 5 to 10% for waste is satisfactory.
5. Solve for the number of supporter or ribs, divide the circumference by .10 if the spacing is 4" or by .15 if the spacing is 6 inches.
6. Provide 2 pieces circumferential supporter for every joint of the unit form which is equivalent to 90 cm. the width of one G. I. sheet.

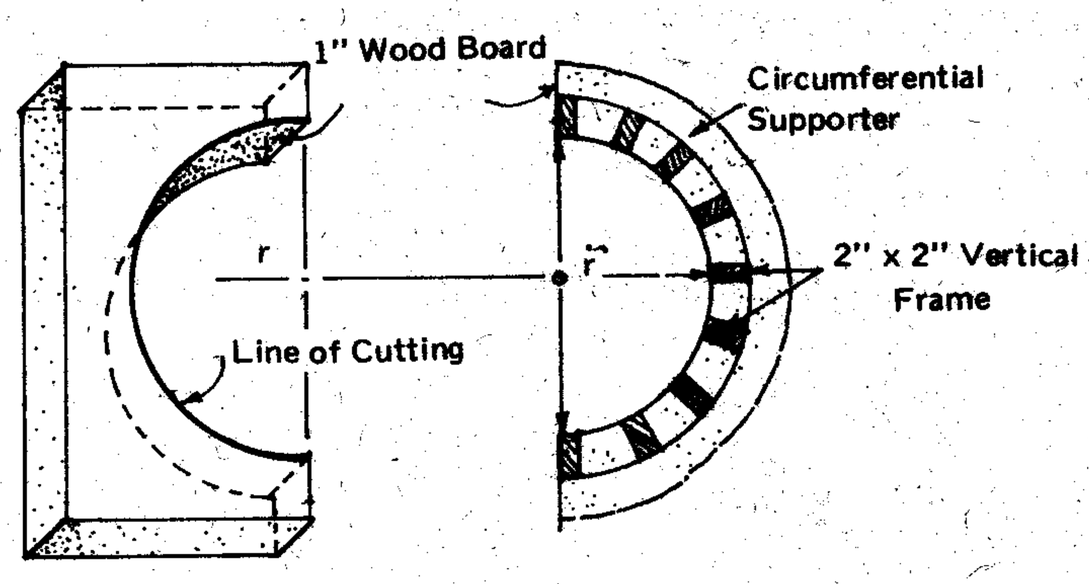

FIGURE 5-6

Illustration 5 - 4

Determine the required G. I. sheet form for 6 circular columns at 4.50 m. high with a uniform cross-sectional diameter of .60 m. using 1" x 14" and 2" s x 2" supporters.

Solution

1. Solve for the circumference of one column

$$C = 3.1416 \times .60 = 1.88 \text{ m.}$$

2. Multiply by the column height

$$\text{Area} = 1.88 \times 4.50 = 8.46 \text{ sq. m.}$$

3. Area of the 6 columns

$$8.46 \times 6 = 50.76 \text{ sq. m.}$$

4. Find the number of sheets required, divide by the effective covering of one G. I. sheet = 2.16

$$\frac{50.76}{2.16} = 23.5 \text{ pcs.}$$

5. Consider 10% allowable factor

$$23.5 \times 1.10 = 25.85$$

6. Total G. I. sheets

$$= 25.85 \text{ say } 26 \text{ pcs.}$$

7. Solve for the 2" x 2" frame of one column @ .10 m. o.c.

$$\frac{1.88}{.10} = 18.8 \text{ say } 19 \text{ pcs.}$$

8. For 6 columns

$$19 \times 6 = 114 \text{ pcs.}$$

9. Height of the column is 4.50 m. or 16 ft. Therefore, the order will be:

114 pcs. 2" x 2" x 16' = 608 bd. ft.

10. Circumferential arc supporter

$$\frac{4.50 \text{ m. ht.}}{.90} = 5 \text{ pcs.}$$

11. Multiply by 2

5 x 2 = 10 pcs.

The value of 2 is the circumferential supporter frame per G. I. sheet form at 90 cm. high having 2 frames per joint (see figure 5-7)

12. Total for 6 columns

10 x 6 = 60 pcs. 1" x 14" x 5' or
30 pcs. 1" x 14" x 10' = 350 bd. ft.

Note: The diameter of the circular column is .60 m. or 2. ft. hence, a 5 ft. board divided into two will be satisfactory for the circumferential arc. (See Figure 5-7).

Summary

26 pcs. .90 x 2.40 m. plain G. I. sheet
114 pcs. 2" x 2" x 16'
30 pcs. 1" x 14" x 10'

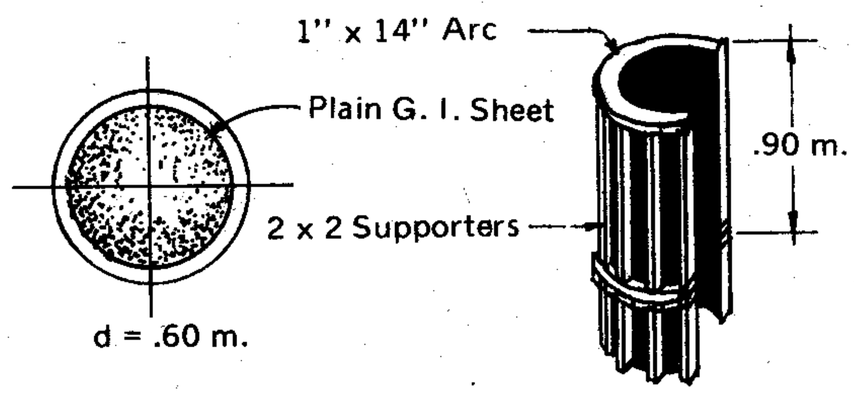

CIRCULAR COLUMN FORM

FIGURE 5-7

TABLE 5-3 QUANTITY OF LUMBER FORM FOR CIRCULAR COLUMN

LUMBER SIZE	BOARD FOOT PER PLAIN G.I. SHEET SPACING OF FRAME			
	10 cm.	12.5 cm.	15 cm.	20 cm.
1" x 2"	11.70	10.00	8.50	6.50
2" x 2"	23.39	20.00	17.00	13.00
2" x 3"	35.08	30.00	25.50	19.50
1" x 8"	7.70	7.70	7.70	7.70
1" x 10"	9.62	9.62	9.62	9.62
1" x 12"	11.54	11.54	11.54	11.54
1" x 14"	13.47	13.47	13.47	13.47

Illustration 5-5

Solving the problem of illustration 5-4 using Table 5-3, we have the following data:

Number of columns	=	6 pcs.
Height	=	4.50 m.
Diameter	=	.60 m.
Lumber	=	1 x 14 and 2 x 2
Circumference	=	1.88 m.

Solution

1. Find the lateral surface area of the 6 circular columns

   1.88 x 4.50 m. x 6 columns

   = 50.76 sq. m.

2. Divide by the effective covering area of one G. I. sheet

   $$\frac{50.76}{2.16} = 23.50 \text{ pcs.}$$

3. Consider 10% for allowance

   23.22 x1.10 = 25.54 say 26 pcs.

4. Solving for the supporter frame or ribs @ .10 m. o.c. From Table 5-3

   Multiply:

   26 x 23.39 = 608 bd. ft.

5. Circumferential supporter, using 1" x 14" board
   From Table 5-3
   Multiply:

   26 x 13.47 = 350 bd. ft.

TABLE 5-4 FORM FOR BEAMS AND GIRDERS

PLYWOOD SIZE	NUMBER Per Sq. m.	LUMBER FRAME BD. FT. PER PLYWOOD 1 x 2	2 x 2	2 x 3
.90 x 1.80	.81	8.0	16.0	24.0
1.20 x 2.40	.42	16.0	32.0	48.0

Illustration 5-7

Six concrete beams with a cross-sectional dimension of .30 x .40 m. has a uniform clear span of 4.50 m. specify the use of 6 mm. x 1.20 x 2.40 plywood forms on a 2 x 2 wood frame. Prepare the bill of materials.

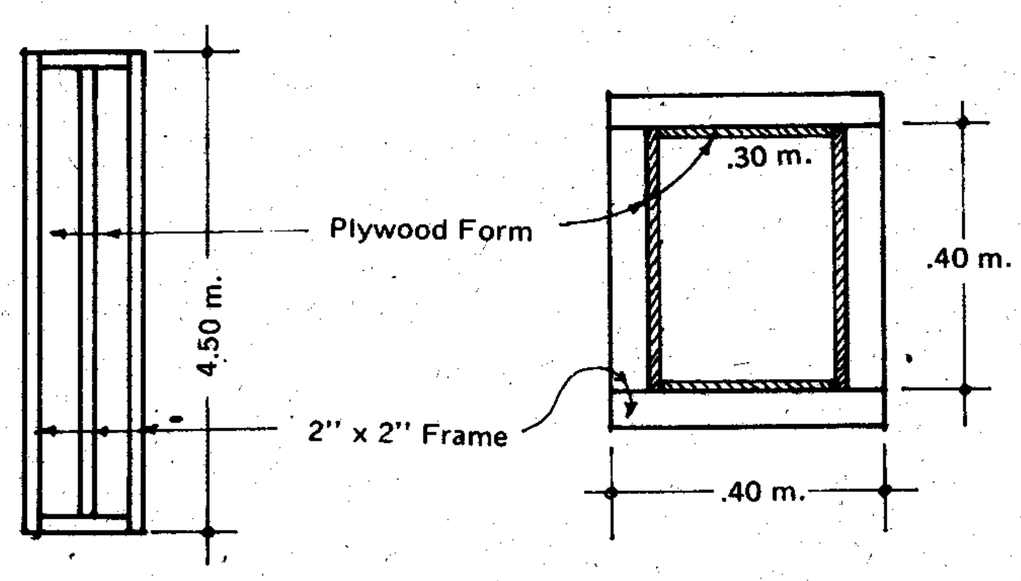

FIGURE 5-8

Solution

1. Find the length of the two sides (depth) and bottom of the beam.

   (.40 x 2) + .30 = 1.10 m.

2. Multiply by the clear span

   1.10 x 4.50 = 4.95 sq. m.

3. Solving for the plywood form, from Table 5-4
   Multiply:

   4.95 x .42 = 2.1 pcs.

4. Lumber frame or ribs, from Table 5-4
   Multiply:

   2.1 pcs. x 32.0 = 64 67.2 bd. ft.

Summary for 6 Beams

12 pcs. 6 mm. x 1.20 x 2.40 m. plywood
384 bd. ft. 2" x 2" x 16' lumber

5-7 ESTIMATING SCAFFOLDING AND STAGING

Estimating the quantity of the materials needed for scaffolding or staging is somewhat difficult considering the volume of the materials involved. The computation requires time and rich imagination of the estimator in determining the vertical and horizontal support including the diagonal braces, the blocks and the wedges which are not shown even on a detailed plan of the building.

Complicating as such, no one would be crazy enough to be painstakingly counting every parts of the staging in order to be commended for obtaining an accurate estimate of the lumber required, except maybe the author of the Simplified Construction Estimate. The usual practice of most estimator is to make a guessing estimate of either the quantity of the materials or by lump sum amount for forms and staging item of the construction. This will not give one a peace of mind but worries and sleepless night especially when the construction is under straight contract.

TABLE 5-5 QUANTITY OF LUMBER FOR SCAFFOLDING OR STAGING

LUMBER SIZE	COLUMN BD. FT. PER METER HT.			BEAM BD. FT./ M. LGTH.		FLOORING BD. FT. / SQ. M.
	Vertical	Hor.	Brace	: Vert.	Hor. SUPPORT	
2" x 2"	4.67	21.00	11.67	4.00	4.67	6.10
2" x 3"	7.00	31.67	17.50	6.00	7.00	9.10
2" x 4"	9.33	42.22	23.33	8.00	9.33	12.10

Illustration 5-7

A reinforced concrete building has 9 columns with a clear height of 4.00 meters as shown on Figure 5-9. Determine the required staging under the following specifications:

Vertical Support use 2" x 3" lumber
Horizontal Support use 2" x 2" lumber
Diagonal Braces use 2" x 2" lumber

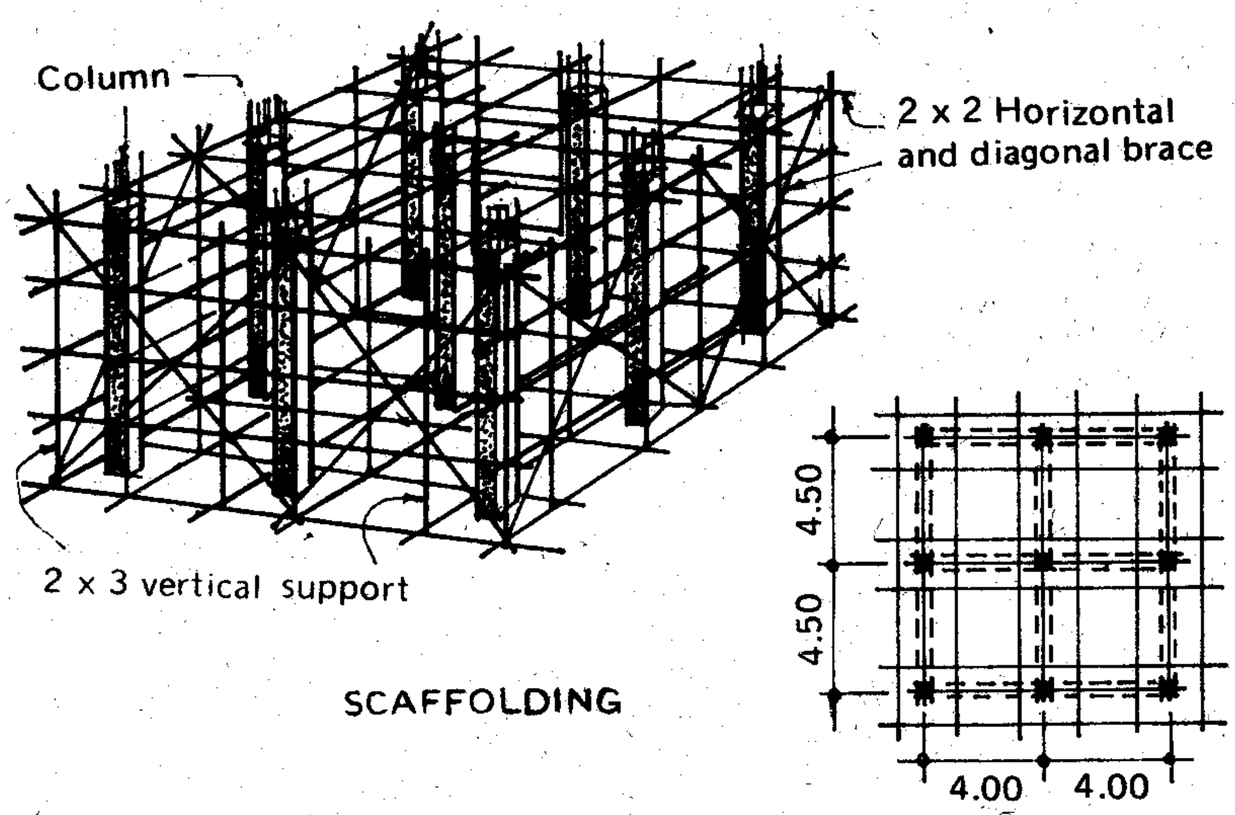

FIGURE 5-9

Solution

A. Staging for Columns

1. Find the total length of the 9 columns
   4.00 m. x 9 = 36 m.

2. Using 2" x 3" vertical support from Table 5-5
   Multiply:

   36 x 7.00 = 252 bd. ft.

   If the height is 4.00 m. order

   252 bd. ft. 2" x 3" x 14 ft.

3. Horizontal Support: From Table 5-5 using 2 x 2
   Multiply:

   36 x 21.00 = 756 bd. ft.

4. Diagonal Braces: From Table 5-5
   Multiply:

   36 x 11.67 = 420 bd. ft.

5. Total:

   252 bd. ft. 2" x 3" x 14 ft.
   1,176 bd. ft. 2" x 2" x 16 ft.

   Note: If 2" x 2" is computed in linear ft.
   Multiply by 3 thus:

   1,176 x 3 = 3,528 ln. ft.

B. Staging for Beams

1. Find the total length of the beams

   (4.50 x 6) + (4.00 x 6)

   27 + 24 = 51 meters

2. Referring to Table 5-5

   a) Vertical Support using 2" x 3"
      Multiply:

      51 x 6.00 = 306 bd. ft.

b) Horizontal Support using 2" x 2"
Multiply:

51 x 4.67 = 238 bd. ft.

c) Total:

306 bd. ft. 2" x 3" x 14 ft.
238 bd. ft. 2" x 2" x 14 ft.

C. Staging for Concrete Floor Slab

1. Find the area of the floor

4.50 x 4.00 x 4 units = 72 sq. m.

2. Referring to Table 5-5 using 2" x 3"
Multiply:

72 x 9.10 = 655 bd. ft.

3. Order:

655 bd. ft. 2" x 3" x 14'

Comment:

In the construction of multi-storey building, the transfer of the forms and scaffolding or staging from one floor to the next floor is an inevitable normal operation wherein waste of materials could not be avoided due to tear and wear. The percentage of waste varies depending upon the following factors.

1. The difference in height between the 1st and the 2nd floor naturally requires adjustment of the vertical support.

2. The difference in size of the beams and girders also requires adjustment of the forms.

3. The tear and wear of the forms and scaffolding are caused by dismantling, transfering and re-assembling.

4. Wreckless use and handling of the materials including firewood and pilferages during the progress of the work.

The use of lumber classified as form lumber of inferior quality will only result to a high percentage waste and risk. The use of inferior quality lumber or forms and staging for economic reason should be discourage because the final accounting result will show that such idea is more expensive contrary to what is expected.

As previously mentioned the percentage of waste in transfering the staging from one floor to the next floor varies from 5 to 10% depending upon the physical condition of the structure, the quality of materials and the manner of how the materials are handled.

chapter 6

ROOFING MATERIALS

6-1 Galvanized Iron Sheet

Galvanized iron sheet is either Plain or Corrugated. **The Plain G. I. Sheet** is commonly used for roofing, gutter, flushing, downspout, ridge roll, valley and hip roll etc. with a standard commercial size of .90 m. wide by 2.40 meters long. **The Corrugated G. I. Sheet** on the otherhand, is widely used for roofing material having standard width of .80 meter with varying length from 1.50 meters to 3.60 meters at an interval length of 30 centimeters.

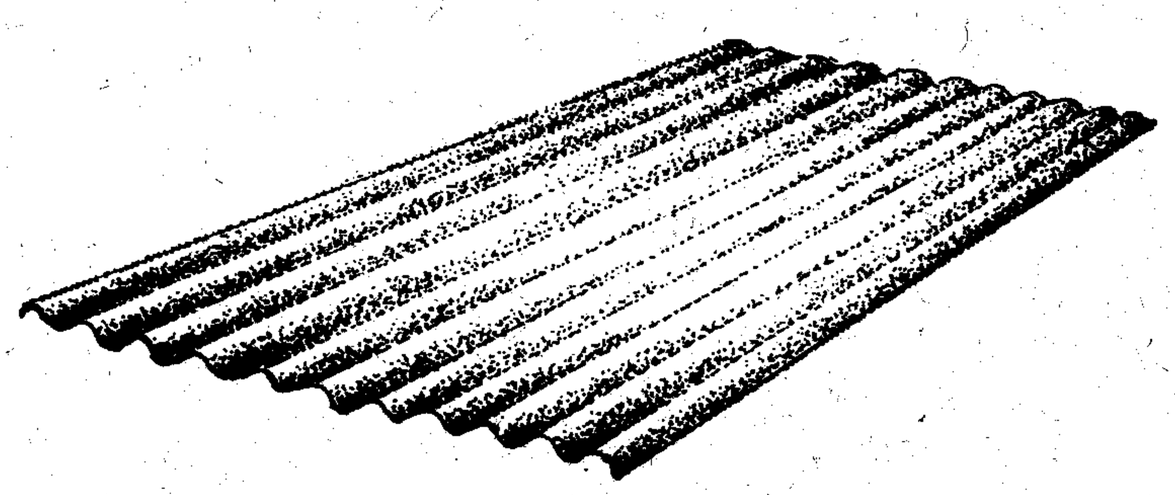

FIGURE 6-1

The thickness of the galvanized iron sheets are measured in terms of **Gauge** from number 14 to 30 wherein the sheet becomes thinner as the gauge number increases. Gauge number 26 is the most extensively used although gauge 24 is sometimes specified by those who could afford the cost.

How to distinguish the difference in thickness of the G.I. sheets between the consecutive gauges from 14 to 30 is difficult to determine even with the aid of a caliper. The gauge is expressed in terms of hundreth of a centimeter and the only way by which one could be sure that he is buying the right thickness of the G. I. sheet is through the weight measure per sheet according to its length as presented in Table 6-1.

The important factors to be considered in estimating corrugated G. I. sheets are:

1. Verify the specifications of the side lapping if it is ½ or 2½ corrugations.

2. If it is 1½ corrugations the effective width covering per sheet is .70 m. or .60 m. for 2½ corrugations.

3. The standard end lapping joint is from 25 cm. to 30 cm.

4. The distances between the purlins should be proportionally spaced and adjusted to the length of the G.I sheets to avoid unnecessary cutting of the roofing sheets.
   In short, the length of the roofing sheet governs the distances or spacing of the purlins. Refer to Table 6-2.

5. As much as possible, minimize the end-lapping joint of the G. I. sheets, always specify longer length for economic reason.

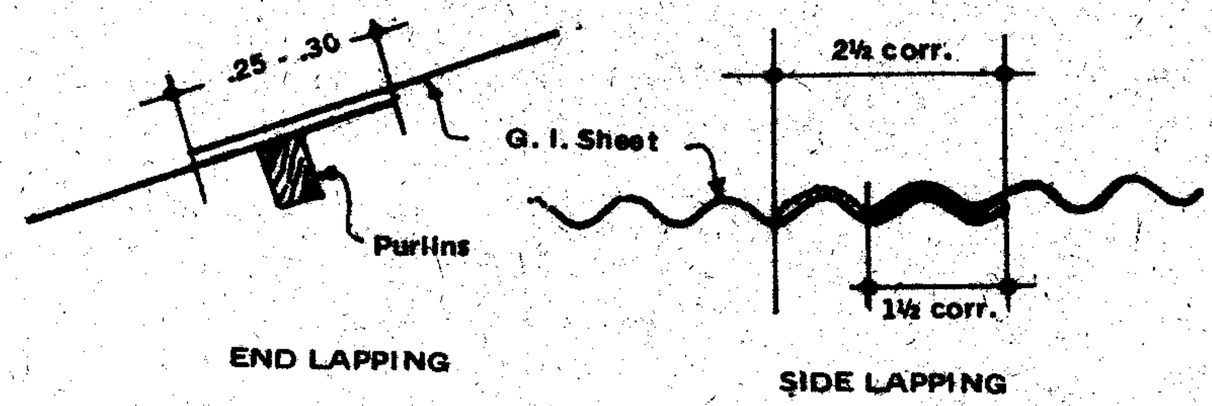

TABLE 6-1 STANDARD WEIGHT OF GALVANIZED IRON SHEET IN KILOGRAM

Gauge No.	Thickness in cm.	1.50 m. (5')	1.80 m. (6')	2.10 m. (7')	2.40 m. (8')	2.70 m. (9')	3.00 m. (10')	3.30m. (11')	3.60 m. (12')
14	.203	22.36	26.83	31.30	35.78	40.25	44.72	49.19	53.66
15	.180	20.25	24.30	28.35	32.40	36.45	40.00	44.55	48.60
16	.163	18.41	21.76	25.39	29.02	32.64	36.27	39.90	43.52
17	.147	16.43	19.72	23.00	26.29	29.58	32.86	36.15	39.43
18	.132	14.73	17.67	20.62	23.56	26.51	29.45	32.40	35.34
19	.117	13.03	15.63	18.24	20.84	23.45	26.05	28.66	31.26
20	.102	11.32	13.58	15.85	18.11	20.38	22.64	24.90	27.17
21	.094	10.43	12.52	14.60	16.69	18.78	20.86	22.95	25.03
22	.086	9.62	11.54	13.46	15.38	17.31	19.23	21.15	23.08
23	.079	8.73	10.47	12.22	13.96	15.71	17.45	19.20	20.94
24	.071	7.91	9.49	11.07	12.66	14.24	15.82	17.40	18.98
25	.064	7.03	8.43	9.84	11.24	12.65	14.05	15.45	16.86
26	.056	6.19	7.42	8.66	9.90	11.14	12.38	13.61	14.85
27	.051	5.76	6.91	8.06	9.21	10.36	11.51	12.66	13.81
28	.048	5.33	6.39	7.46	8.52	9.59	10.65	11.72	12.78
29	.043	4.90	5.88	6.86	7.84	8.82	9.80	10.78	11.76
30	.041	4.48	5.37	6.27	7.16	8.06	8.95	9.85	10.74

TABLE 6-2 EFFECTIVE COVERING OF CORRUGATED G.I. SHEETS, NO. OF NAILS & RIVETS PER SHEET AND SPACING OF PURLINS

LENGTH in Feet	Meter	EFFECTIVE WIDTH COVERING SIDE LAPPING 1½ Corr.	2½ Corr.	DISTANCE OF PURLINS in m.	NO. OF NAILS OR RIVETS per sheet
6	1.80	.70	.60	.75	14
7	2.10	.70	.60	.60	18
8	2.40	.70	.60	.70	18
9	2.70	.70	.60	.60	22
10	3.00	.70	.60	.67	22
12	3.60	.70	.60	.66	26

Procedures in estimating the quantity of corrugated G.I. roofing and its accessories.

1. Determine the length of the purlins along the gutter line.

2. Divide this length by the effective width covering of one sheet which is .70 m. for 1½ corrugations or .60 m. for 2½ corrugations (See Table 6-2) the result is the number of G.I. sheets in one row.

3. Determine the length of the rafter or the top chord then select the right combination of G.I. roofing sheets that will satisfy this length considering the 30 cm. end lapping joint.

4. Multiply the result found in step 2 by each length of G.I. sheet combination found in step 3.

5. Determine the number of G.I. nails or rivets and washers in kilogram using Table 6-2 and Table 6-3.

6. The number of anchor G.I. strap is the same as the quantity of the rivets. The G.I. washer is double the quantity of the rivets (see Table 6-3).

7. Solve for the number of plain G.I. sheets required for anchor strap with the aid of Table 6-4.

TABLE 6-3 QUANTITY OF ROOF ACCESSORIES IN KILO

MATERIALS	NUMBER OF PIECES PER KILO
G. I. Roofing Nails	120
G. I. Rivets	180
G. I. Washers	126
Lead Washers	75
Umbrella Nail	120

TABLE 6-4 SIZE AND QUANTITY OF G.I. ANCHOR STRAP IN ONE PLAIN G.I.SHEET

SIZE OF PURLINS mm.	SIZE OF PURLINS in.	SIZE OF G.I. STRAP in cm.	NO. OF STRAP IN ONE PLAIN G.I. SHEET
50 x 75	2 x 3	2.5 x 22.5	384
50 x 100	2 x 4	2.5 x 25.0	342
50 x 125	2 x 5	2.5 x 27.5	312
50 x 150	2 x 6	2,5 x 30.0	288

Illustration 6-1

From Figure 6-2, find the number of corrugated G. I. sheets and its accessories required if the side lapping specify 1½ corrugations with 30 cm. end lapping on a 50 x 75 mm. purlins.

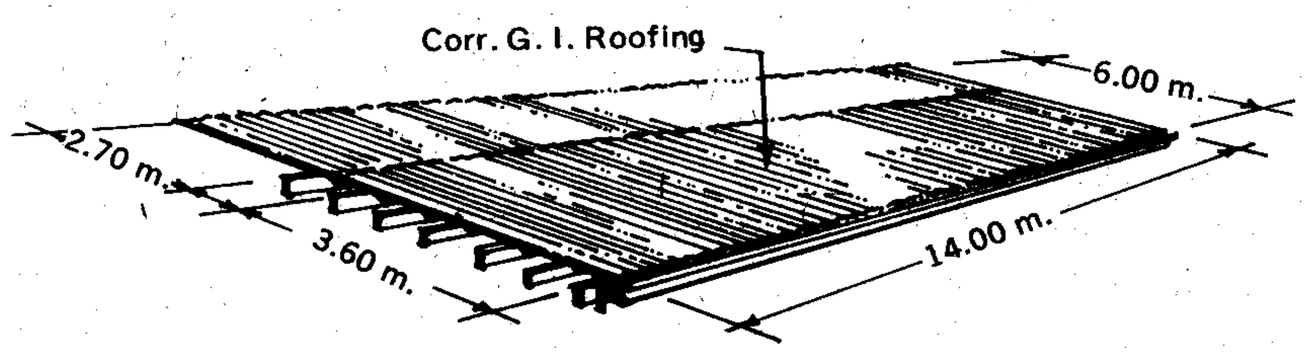

FIGURE 6-2

Solution

A. For Corrugated G.I. Sheets

1. Divide the length of the gutter by the effective covering of one sheet, referring to Table 6-2.

   Divide:

$$\frac{14.00 \text{ m.}}{.70 \text{ m.}} = 20 \text{ pcs.}$$

2. The length of the rafter is 6.00 m. A combination of 3.60 m. and 2.70 m. long G.I. sheets

3. Order:

20 pcs. .80 x 3.60 m. G.I. Sheets
20 pcs. .80 x 2.70 m. G.I. Sheets

B. Rivets

1. Referring to Table 6-2 for a 3.60 m. and 2.70 m. sheet

Multiply:

For 3.60 m. long: 20 pcs. x 26 = 520 pcs.
For 2.70 m. long: 20 pcs. x 22 = 440 pcs.
Total = 960 pcs.

2. Convert to kilograms, from Table 6-3

Divide:

$$\frac{960}{180} = 5.33 \text{ say } 5.5 \text{ kg.}$$

C. G.I. Washers

1. Double the number of rivets

960 x 2 = 1,920 pcs.

2. Convert to kilograms, referring to Table 6-3

$$\frac{1,920}{126} = 15.24 \text{ say } 15.5 \text{ kg.}$$

D. Plain G.I. Strap on 50 x 75 mm purlins

1. Total number of rivets = 960 pcs.

2. Referring to Table 6-4 using 50 x 75 mm. purlins
   Divide:

$$\frac{960}{384} = 2.5 \text{ pcs. Plain G.I. Sheets}$$

E. Lead Washers

1. The number of Rivets is equal the number of lead washers = 960 pcs.

2. Referring to Table 6-3
   Divide:

$$\frac{960}{75} = 12.8 \text{ say } 13 \text{ kg.}$$

Summary

20 pcs. 80 cm. x 360 cm. Corr. G.I. sheets
20 pcs. 80 cm. x 270 cm. Corr. G.I. sheets
5.5 kg. G.I. Rivets
15.5 kg. G.I. Washers
13 kg. Lead Washers
2.5 pcs. Plain G.I. sheets

Illustration 6-2

From Figure 6-3 find the number of corrugated G.I. sheets and the umbrella nails required if the G.I. sheets are laid at 2½ corrugations with .30 m. end lapping joint.

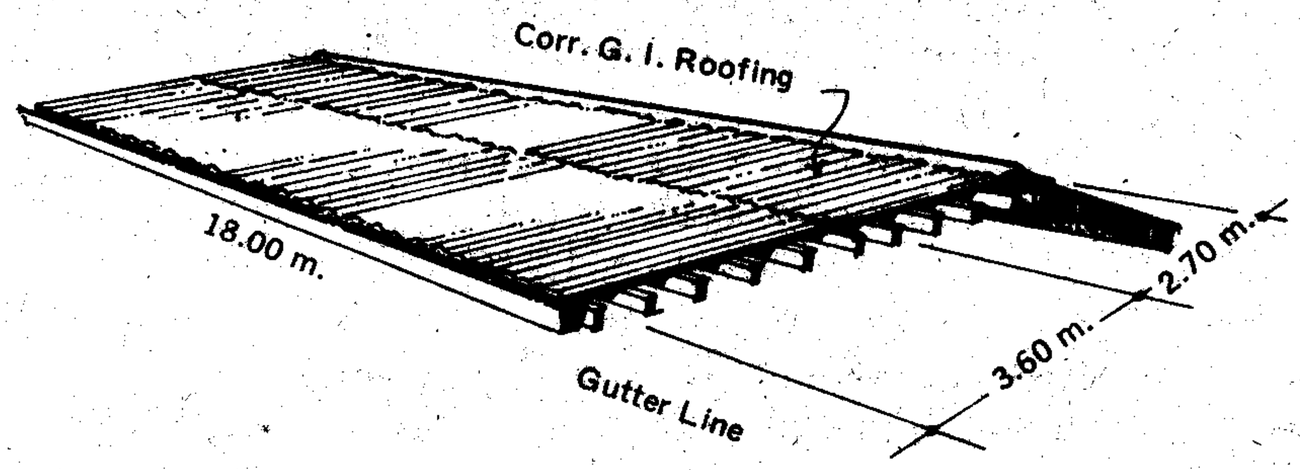

FIGURE 6-3

Solution

A. Corrugated G.I. Sheets

1. Referring to Table 6-2
   Divide:

$$\frac{18.00 \text{ m.}}{.60 \text{ m.}} = 30 \text{ pcs.}$$

2. The length of the rafter is 6.00 m. or a combination of 3.60 and 2.70 m. sheets with 30 meter end lapping (See Table 6-5).

3. Multiply each sheet length by the result of step 1

   30 pcs. - .80 m. x 3.60 m. Corr. G.I. Sheets
   30 pcs. - .80 m. x 2.70 m. Corr. G.I. Sheets

B. Umbrella Nails

1. Referring to Table 6-2, determine the number of nails for the 3.60 m. and 2.70 m. sheets.

30 sheets x 26	=	780 pcs.
30 sheets x 22	=	660 pcs.
Total		1,440 pcs.

2. Solve for the umbrella nail in kilograms
Referring to Table 6-3

$$\frac{1,440}{120} = 12 \text{ kg.}$$

Illustration 6-3

From Figure 6-4, find the number of corrugated G.I. sheets, roof nails, washers and lead washers required if the side lapping specify 1½ corrugations

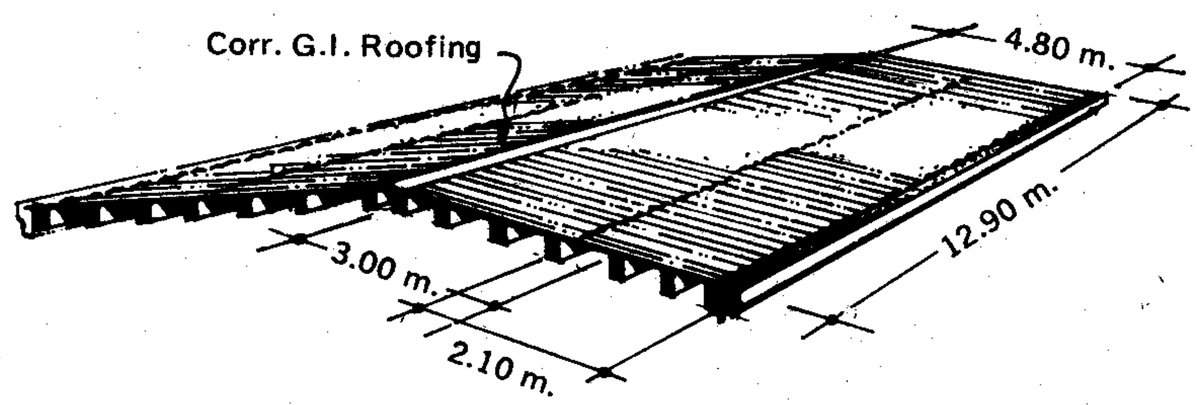

FIGURE 6-4

Solution

A. Corrugated G.I. Roofing

1. Referring to Table 6-2
   Divide:

$$\frac{12{,}90 \text{ m.}}{.70 \text{ m.}} = 18.43 \text{ pcs.}$$

2. Determine the length of the rafters (see Figure 6-4)

   4.8 m. or 16 ft.

3. Referring to Table 6-5, 4.80 m. rafter requires a combination of 3.00 m. and 2.10 m. G.I. sheets

4. Therefore:

   18.43 x 2 = 36.86 say 37 pcs. @3.00 m. long
   18.43 x 2 = 36.86 say 37 pcs. @2.10 m. long

B. Roof Nails

1. Referring to Table 6-2

   For a 3.00 sheet: 37 x 22 = 814 pcs.
   For a 2.10 sheet: 37 x 18 = 666 pcs.
   Total 1,480 pcs.

2. Referring to Table 6-3

   G.I. Roof Nails: $\frac{1{,}480}{120}$ = 12.33 say 13 kg.

G.I. Washers: $\frac{1,480}{126} = 11.75$ say 12 kg.

Lead Washers: $\frac{1,480}{75} = 19.73$ say 20 kg.

TABLE 6-5 COMBINATION OF CORRUGATED G.I. SHEETS ON A GIVEN RAFTER LENGTH

LENGTH OF RAFTERS in meter	NO. OF SHEETS	COMBINATION OF LENGTH meter (ft.)	and	meter (ft.)		
3.00	1	3.00 (10')				
3.30	1	3.30 (11')				
3.60	1	3.60 (12')				
3.90	2	2.10 (7')	and	2.10 (7')		
4.20	2	2.40 (8')	and	2.10 (7')		
4.50	2	2.40 (8')	and	2.40 (8')		
4.80	2	3.00 (10')	and	2.10 (7')		
5.10	2	3.00 (10')	and	2.40 (8')		
5.40	2	3.00 (10')	and	2.70 (9')		
5.70	2	3.00 (10')	and	3.00 (10')		
6.00	2	3.60 (12')	and	2.70 (9')		
6.30	2	3.60 (12')	and	3.00 (10')		
6.60	2	3.60 (12')	and	3.10 (11')		
6.90	2	3.60 (12')	and	3.60 (12')		
7.20	3	3.00 (10')	and	2.40 (8'	and	2.40 (8')
7.50	3	3.00 (10')	and	3.00 (10')	and	2.10 (7')
7.80	3	3.00 (10')	and	3.00 (10')	and	2.40 (8')
8.10	3	3.60 (12')	and	3.00 (10')	and	2.10 (7')
8.40	3	3.60 (12')	and	3.00 (10')	and	2.40 (8')
8.70	3	3.60 (12')	and	3.60 (12')	and	2.10 (7')
9.00	3	3.60 (12')	and	3.60 (12')	and	2.40 (8')

Illustration 6-4

From Figure 6-5, determine the number of corrugated G.I. sheets, rivets, washers, lead washers and the plain G.I. strap required at 2½ side lapping corrugations on a 50 x 100 mm purlins.

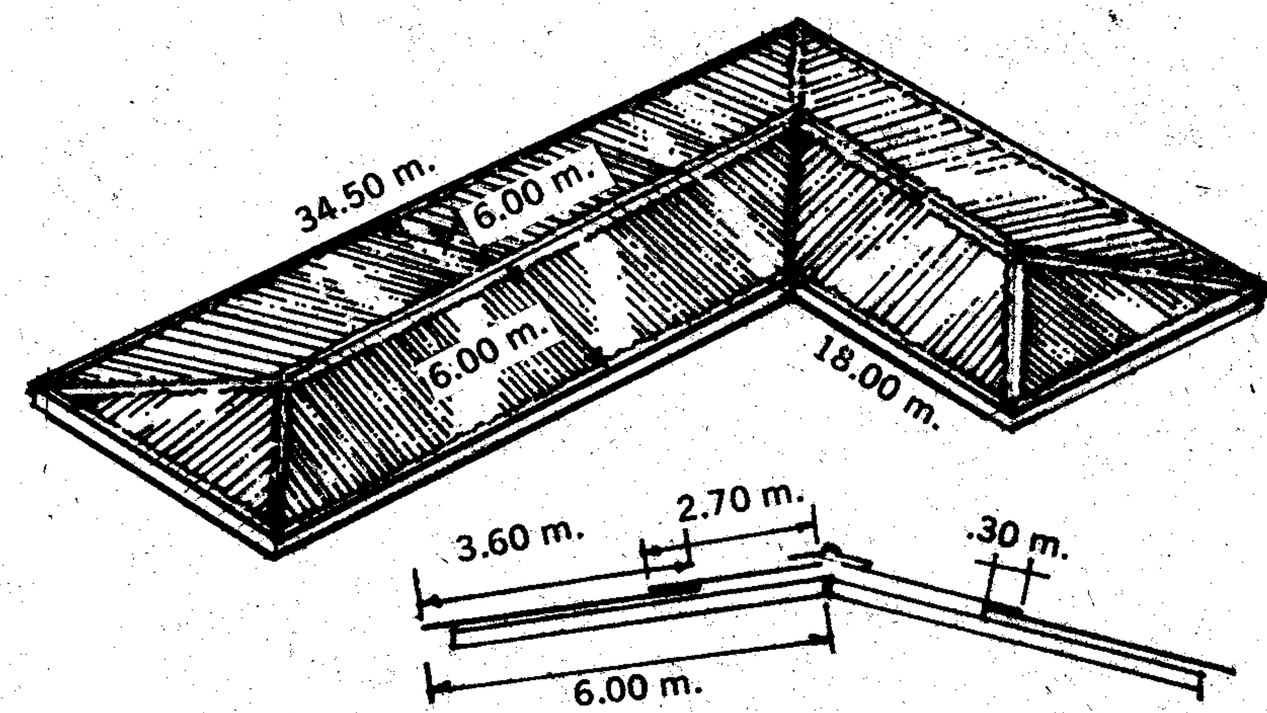

FIGURE 6-5

Solution

A. Corrugated G.I. Sheets

1. Referring to Table 6-2 for 2½ corrugation effective covering is .60 m.
   Divide:

$$\frac{34.50}{.60} = 57.50 \text{ pcs.}$$

$$\frac{18.00}{.60} = 30 \text{ pcs.}$$

2. Length of Top Chord or rafter, Table 6-5

For 6.00 m. = 3.60 and 2.70 m. sheets
For 5.40 m. = 3.00 and 2.70 m. sheets

3. Determine the number of G.I. sheets

For 3.60 m. sheet: 57.50 x 2 run = 115 pcs. (12')
For 2.70 m. sheet: 57.50 x 2 run = 115 pcs. (9')
For 3.00 m. sheet: 30 x 2 run = 60 pcs. (10')
For 2.70 m. sheet: 30 x 2 run = 60 pcs. (9')

B. G.I. Rivets: Referring to Table 6-2

1. For the 3.60 m. sheet: 115 x 26 = 2,990 pcs.
For the 3.00 m. sheet: 60 x 22 = 1,320 pcs.
For the 2.70 m. sheet: 175 x 22 = 3,850 pcs.
Total = 8,160 pcs.

2. Referring to Table 6-3

a) Rivets: $\frac{8,160}{180}$ = 45.3 say 46 kg.

b) G.I. Washers (Double the Rivets) Table 6-3

$$\frac{8,160 \times 2}{126} = 129.52 \text{ say } 130 \text{ kg.}$$

c) Lead Washers:

$$\frac{8,160}{75} = 108.8 \text{ say } 109 \text{ kg.}$$

C. Plain G.I. Strap

1. Size of G.I. straps on a 50 x 100 mm. purlins

   = 2.5 by 25 cm.

2. Number of strap is equal to number of rivets

   = 8,160 pcs.

3. Solve for the number of plain G.I. sheets
   Referring to Table 6-4

$$\frac{8,160}{342} = 23.86 \text{ say } 24 \text{ pcs.}$$

4. Common wire nails for the anchor straps

   8,160 x 3 nails per strap

   = 24,480 pcs. 32 mm. CW Nail

Note:
1 kilo of 4d, 32 mm CW Nail is Approx.
695 pcs.

$$\frac{24,480}{695} = 35.2 \text{ say } 36 \text{ kg.}$$

D. Ridge Roll, Fascia and Gutter to be discussed later in a separate topic.

Summary

115 pcs. .80 m. x 3.60 m. Corr. G.I. Sheets
175 pcs. .80 m. x 2.70 m. Corr. G.I. Sheets

60 pcs.	.80 m. x 3.00 m. Corr. G.I. Sheets
46 kgs.	G.I. rivets
130 kgs.	G.I. washers
109 kgs.	Lead washers
24 pcs.	.90 m. x 2.40 m. Plain G.I. sheets
36 kgs.	4d, 38 mm. 32 mm. CW Nail

Comments

The estimating procedure for a hipped-roof is the same as that of the lean-to or gable type roofing, considering the effective covering of one sheet to be constant. However, a little variation might occur in actual construction under the following conditions:

1. If the hipped roof is not patterned at 45° extra cutting of the G.I. roofing is inevitable.

2. Errors might be committed in cutting and or lapping of the corrugated G.I. sheets.

Under these circumstances, an allowance of 2 to 5% will be satisfactory.

GUTTER FLUSHING, RIDGE, HIPPED AND VALLEY ROLL

Estimating for these kind of roof-accessories is simply determining the number of plain G.I. sheets needed to mould or fabricate the gutter, flushing and the different rolls according to the shape as shown in the plan. In building construction, this type of work is classified under the tinsmithing work.

The primary consideration in tinsmithing job is **economy** which simply mean "To utilize every inch of the tinsheet." Any unnecessary or unwise cutting of the tinsheet as much as possible should be avoided. Cutting shall start from the widest to the narrowest part of the roof accessories. Experienced tinsmith start cutting from the gutter, then flashing down to the smallest plain G.I. strap thereby eliminating waste.

Estimating procedure

1. Solve for the total length of the gutter.
2. Divide this length by 2.35 m. to find the number of gutter required.
3. Find the total width of one gutter.
4. Divide .90 m. by the result of step 3 to find how many gutters could be made out from one plain G.I. sheet. The fractional value shall be reserved for other parts.
5. Divide the result of step 2 by the result of step 4. The result is the required number of plain G.I.sheets.

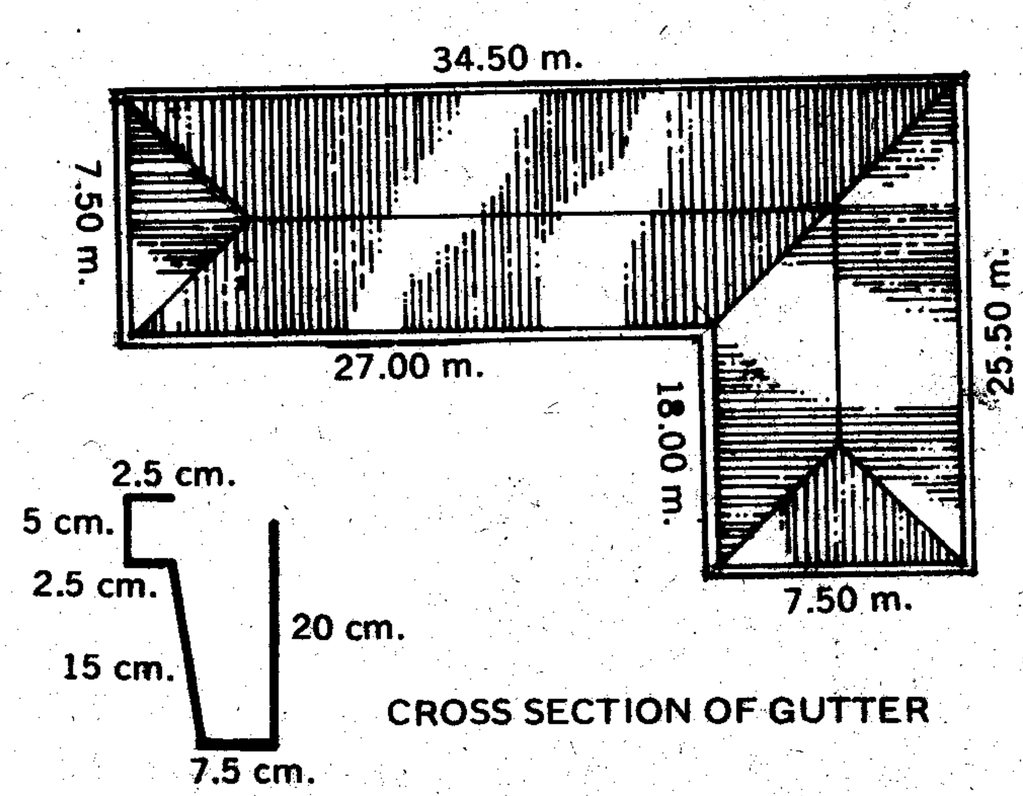

FIGURE 6-6

Illustration 6-5

Reproducing Figure 6-5 of illustration 6-4, find the number of plain G.I. sheets required to fabricate the gutter as illus trated.

Solution

1. Find the total length of the gutters

$$34.50 + 27.00 + 2(7.50) + 18 + 25.50 = 120 \text{ m.}$$

2. Divide the length by 2.35

$$\frac{120}{2.35} = 51 \text{ pcs.}$$

3. Total width of one gutter = 55 cm.

4. Divide:

$$\frac{.90}{.55 \text{ m.}} = 1.64 \text{ pcs. accept } 1.0$$

The fractional value of .64 will be reserved momentarily.

5. Divide:

$$\frac{51}{1.0} = 51 \text{ pcs. plain G.I. sheets}$$

Comment

It will be noted that the width of one plain G.I. sheet is .90 meter, dividing this width by the total width of one gutter

which is .55 m. the result is 1.64 pieces. This simply mean that only one gutter could be taken from one plain G.I. sheet with an excess cut of .64 or equivalent of .35 meter.

The .35 m. excess does not necessarily mean to be considered as totally waste because there are parts in the tinsmithing work wherein such dimension could be used such as. flushing, downspout, strap, etc.

Illustration 6-6

From Figure 6-7, find the number of plain G.I. sheets required for gutter and flushing.

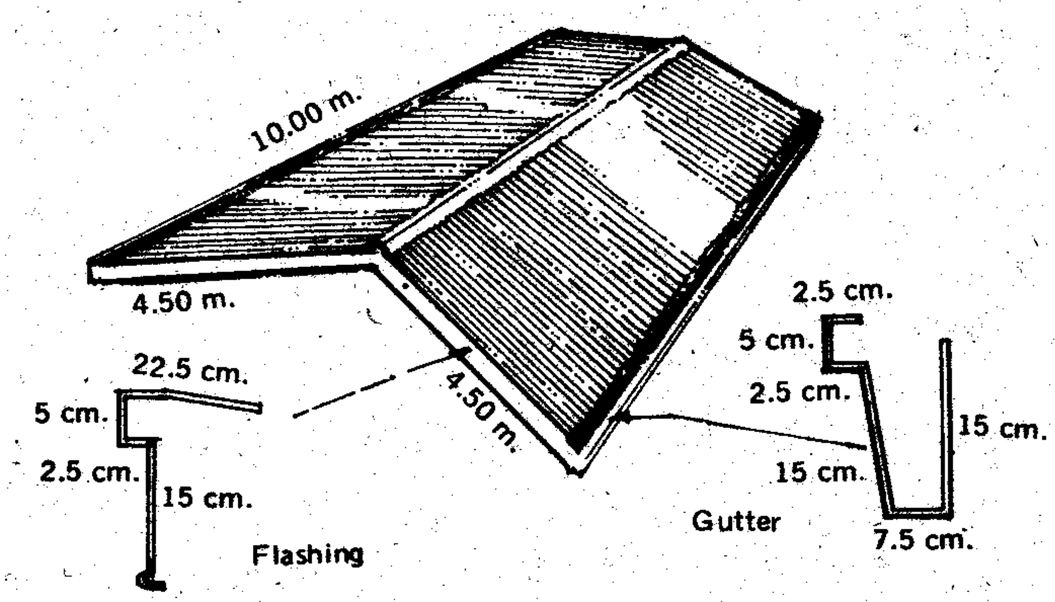

FIGURE 6-7

Solution

A. Gutter

1. Find the total length of the gutter

From the figure = 20 meters

2. Divide by 2.35 m. length of one gutter

$$\frac{20}{2.35} = 8.5 \text{ pcs.}$$

3. Determine the total width of one gutter

From the Figure = .45 m.

4. Divide the width of the plain G.I. sheet

$$\frac{.90}{.45} = 2 \text{ pcs. Gutter per sheet}$$

5. Divide the result of step 2 by the result of step 4

$$\frac{8.5}{2} = 4.25 \text{ say } 5 \text{ pcs.}$$

B. Flashing

1. Determine the total length:

From the Figure: L=18 m.

2. Find the number of flashing

$$\frac{18 \text{ m.}}{2.30} = 7.8 \text{ say } 8 \text{ pcs.}$$

3. Width of the flashing = .45 m.

$$\frac{.90 \text{ m.}}{.45} = 2 \text{ pcs. per G.I. sheet}$$

4. Divide the result of 2 by step 3

$$\frac{8.0}{2} = 4 \text{ pcs.}$$

Summary

For Gutter: 5 pcs. - .90 m. x 2.40 m. plain G.I. sheets
For Flashing 4 pcs. - .90 m. x 2.40 m. plain G.I. sheets

Total : 9 pcs. Plain G.I. Sheets

C. Ridge, Valley and Hipped Rolls

The estimating procedure is the same as that of the gutter and the flashing.

TABLE 6-6 ROOF ACCESSORIES

ITEM	EFFECTIVE LENGTH IN METER
Gutter	2.35
Flashing	2.30
Ridge Roll	2.20
Valley Roll	2.35
Hipped Roll	2.20
Soldering Lead	¼ bar per soldering joint
Muriatic Acid	10 cc per soldering lead

TABLE 6 - 7 CORRUGATED PLASTIC ROOFING SHEET

COMMERCIAL SIZE IN Inches	mm	EFFECTIVE WIDTH COVERING 1½ Corr.	2½ Corr.
26" x 8 ft.	.65 x 2.40	.46 m.	.31 m.
29" x 8 ft.	.725 x 2.40	.53 m.	.38 m.

6-2 Asbestos Roofing

Estimating the asbestos roofing material is simpler than that of the G.I. sheet because all the accessories and parts to be used such as gutter, ridge, hip and valley rolls are readily made for installation. Unlike the galvanized iron roofing, all the accessories are made on the site out from the standard dimension of .90 x 2.40 m. plain G.I. sheets.

The steps in estimating the asbestos roofing materials are enumerated as follows:

1. The number of corrugated sheet is determined by dividing the gutter length by the effective width covering of one sheet.

2. In finding the number of flashing, gutter, ridge, hip and valley rolls, divide the total length by the effective length of the accessories.

3. Other parts such as ridge, end cap, apron flashing, gutter corner, dowspout and fittings are determined by direct counting, they are all readily made according to factory standard sizes.

Illustration 6-7

From Figure 6-8, find the standard asbestos roofing and accessories required.

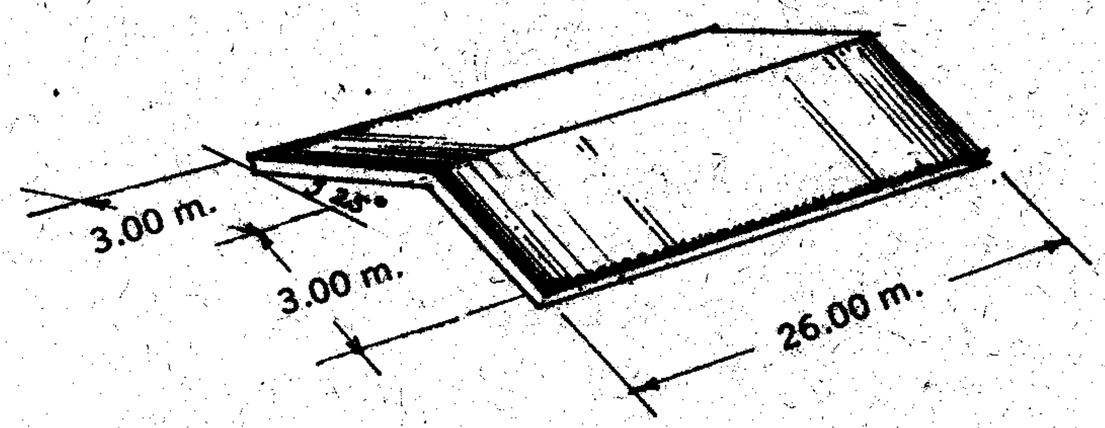

FIGURE 6-8

Solution

A. Corrugated Sheets

1. Find the number of corrugated sheets. Refer to Table 6-8

$$\frac{26.00}{,838} = 31.02 \text{ pcs.}$$

2. Length of rafter = 3.00 m.
   Order:

   62 pcs. 3.00 m. standard asbestos corrugated sheets

B. Gutter

1. Divide the total length of the gutter by the effective length of one gutter. Refer to Table 6-8.

$$26 \times 2 = 52.00 \text{ meters}$$

$$\frac{52.00}{2.336 \text{ m.}} = 22.26 \text{ pcs.}$$

3. Ridge Roll: Total length = 26.00 m.

$$\frac{26.00}{.838} = 31.02 \text{ pcs.}$$

C. Flashing

1. Find the total length

$$3.00 \times 4 = 12.00 \text{ m.}$$

2. Referring to Table 6-8
   Divide:

$$\frac{12.00}{2.286 \text{ m.}} = 5.249 \text{ pcs.}$$

D. Ridge End Cap - By actual counting

DIFFERENT KINDS OF ASBESTOS ROOFING

1. Standard Corrugated Sheet
2. 4-V Corrugated Sheet

3. Kanaletas
4. Placa Romana
5. Tencor Corrugated Sheet
6. Ardex lightweight corrugated sheet
   a. Standard Ardex
   b. Super Ardex

TECHNICAL DATA FOR ESTIMATING PURPOSES

TABLE 6-8 STANDARD CORRUGATED SHEETS

Length	:	1.20 x 3.00 m.
End Lapping: below 20 degree	:	.30 m.
above 20 degree	:	.15 m.
Width: Effective width	:	.838 m.
Ridge Roll. Eff. Length	:	.838 m.
Gutter Effective Length	:	2.336 m.
Outside Flashing	:	2.286 m.
Hip Roll	:	1.676 m.

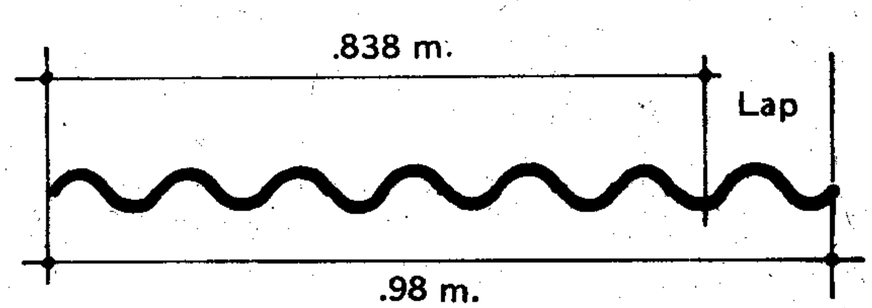

FIGURE 6-9

TABLE 6-9 CORRUGATED SHEETS

Standard Length	:	2.438 m.
Width (effective)	:	.965 m.
Ridge Roll (effective length)	:	.965 m.
Outside Flashing eff. length	:	2.286 m.

Other accessories estimate by direct counting method.

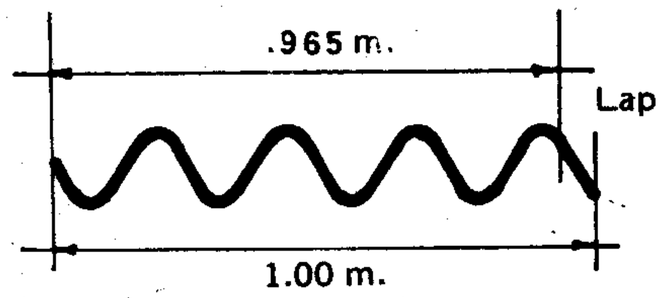

FIGURE 6-10

TABLE 6-10 KANALETAS

Length	:	7.315 m.
Effective Width	:	.885 m.
Eaves Flashing	:	.885 m.
Outside Flashing	:	2.40 to 3.00 m. effective length

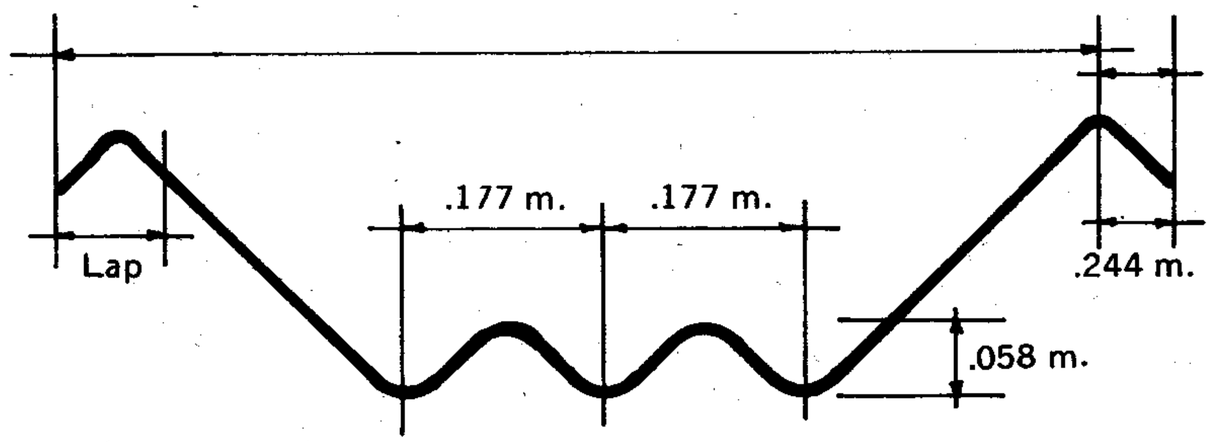

FIGURE 6-11

TABLE 6-11 PLACA ROMANA

Standard Length	:	.812 m.
Effective Length	:	.600 m.
Standard Width	:	1.180 m.
Effective Width	:	1.100 m.
End Lap	:	.200 m.
Side Lap	:	.080 m.
Ridge Roll Effective Length	:	1.100 m.
Outside Flashing Effective Length	:	2.286 m.
Ridge Flashing Effective Length	:	1.100 m.
Eaves Flashing Effective Length	:	1.100 m.

Other accessories, estimate by direct count.

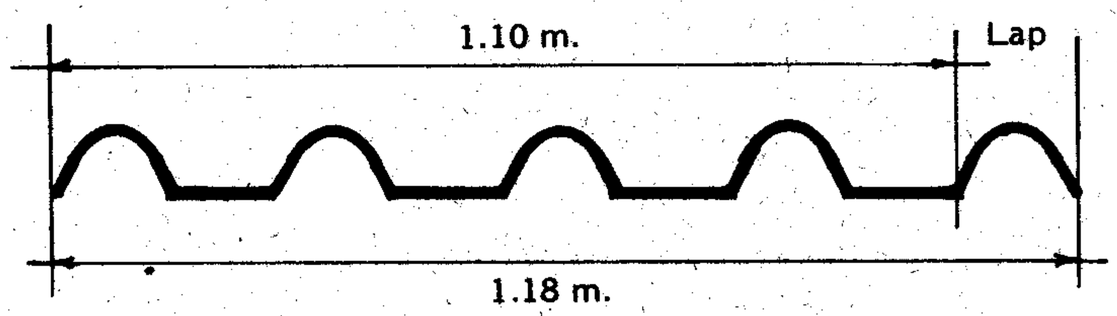

FIGURE 6-12

TABLE 6-12 TENCOR CORRUGATED SHEETS

Standard Length	:	2.44 m.
Lapping	:	.15 m. or .30 m.
Effective Length	:	2.29 m. or 2.14 m.
Standard Width	:	.748 m.
Effective Width	:	.675 m.
Outside Flashing	:	1.50 to 3.00 m.
Minus Lapping	:	.15 m.
Ridge Roll	:	.9525 m.

Other accessories, estimate by direct count.

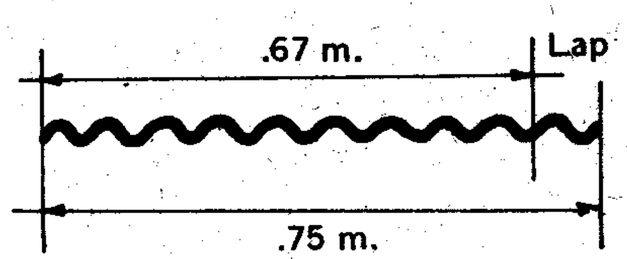

FIGURE 6-13

TABLE 6-13 ARDEX CORRUGATED SHEETS

	MEASUREMENT	
	STANDARD :	SUPER
Standard Width	.52 m.	1.05 m.
Effective Width	.45 m.	.97 m.
Nominal Length	.75 to 3.15 m.	2.40 to 3.60 m.
Ridge Roll Eff. Length	.95 m.	.95 m.
Outside Flashing	1.50 to 2.00 m.	1.50 to 3.00 m.
Side Lapping	.15 m.	.15 m.

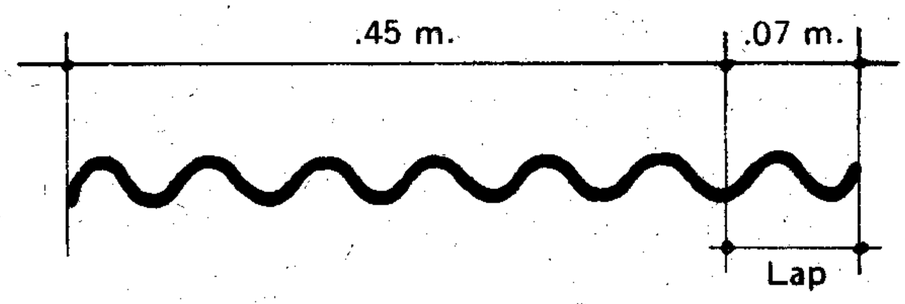

FIGURE 6-14

6-3 COLORBOND KLIP-LOK

Colorbond is a corrosion resistant zinc coated steel sheet prepainted steel ribbed tray roofing and walling with the following special features:

1. Concealed fastening
2. Lock action rib design
3. Attractive fluted trays
4. Near flat roof slopes
5. Less supports - wider spaced
6. Strong lightweight steel
7. Custom cut long lengths

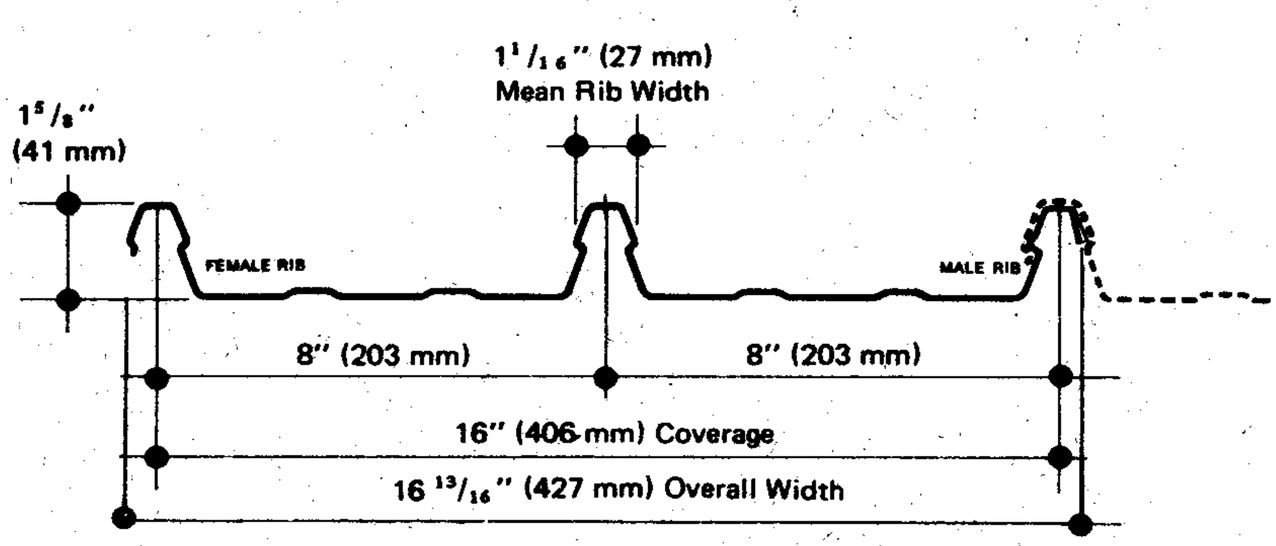

FIGURE 6-15

Technical Data:

Steel base thickness	=	0.60 mm.
Total Coated thickness	=	0.63 mm.
Weight per meter length of panel	=	2.66 kg.
Weight per covered area	=	6.55 kg/m^2
Length available up to	=	15 m.
Longer length through special order up to	=	35 m.
Overall width	=	.427 m.
Effective Width Coverage	=	.406 m.

TABLE 6-14 RECOMMENDED FASTENERS TWO FASTENERS REQUIRED PER CLIP

Support member	Normal fastening	Fastening over insulation blanket up to 4" (100 mm)
Steel up to 3/32" (2.5 mm) thick	No. 10-16 x 5/8" (16 mm) wafer head self drilling and tapping screw.	No. 10-16 x 7/8" (22 mm) wafer head self drilling and tapping screw.
Steel 3/32" to 3/16" (2.5 to 5 mm) thick	No. 10-24 x 5/8" (16 mm) wafer head self drilling and tapping screw.	No. 10-24 x 7/8" (22 mm) wafer head self drilling and tapping screw.
Steel over 3/16" (5 mm) thick	No. 10-24 x 5/8" (16 mm) wafer head thread cutting screw. Drill 11/64" (4.5 mm).	Pre-drill 11/64" (4.5 mm) hole for No. 10-24 x 7/8" (22 mm) wafer head self drilling and tapping screw.
Hardwood	2" x 9G (50 x 3.75 mm) countersunk head galv. spiral nail, or No. 10-12 x 1" (25 mm) type 17 wafer head self drilling woodscrew.	2½" x 9G (60 x 3.75 mm) countersunk head galv. spiral nail, or No. 10-12 x 1¾" (45 mm) type 17 wafer head self drilling woodscrew.
Softwood	No. 10-12 x 1¾" (45 mm) type 17 wafer head self drilling woodscrew.	No. 10-12 x 1¾" (45 mm) type 17 wafer head self drilling woodscrew.

6-4 BANAWE HORIZONTAL METAL TILE

Technical Data

Nominal Width	=	.228 m.
Effective Width Coverage	=	.204 m.
Length	=	12.19 m.
Longer Length	=	Special Order
Minimum Slope	=	15

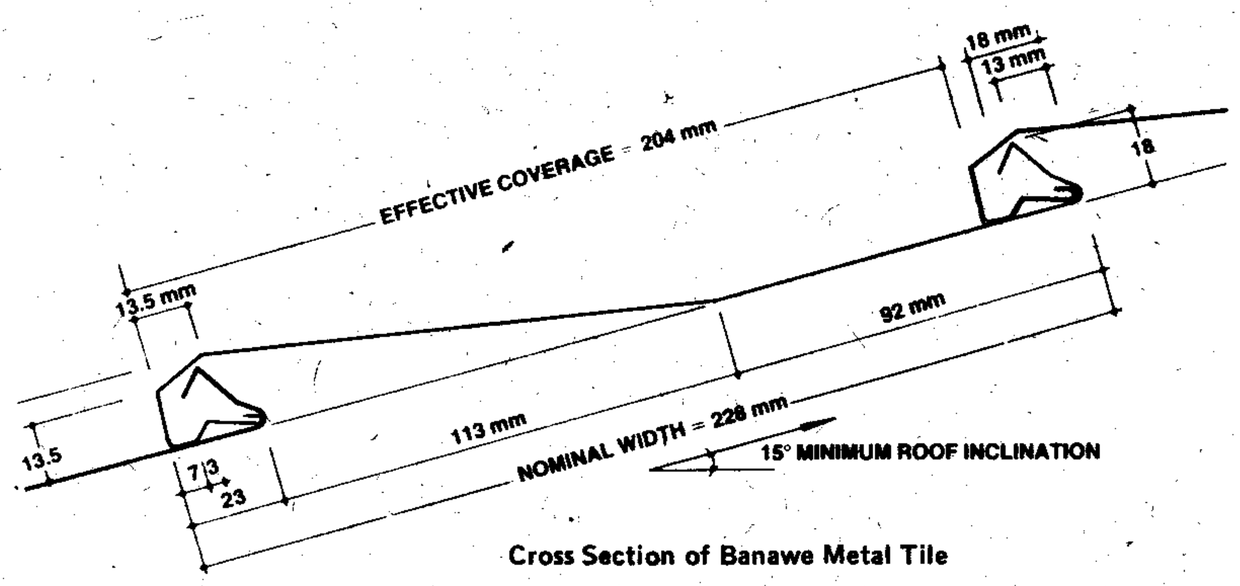

Cross Section of Banawe Metal Tile

FIGURE 6-16

6-5 MARCELO ROOFING SYSTEM

Technical Data:

Width	=	1.14 m.
Length	=	1.11 m.
Effective Width Coverage	=	.96 m.
Effective Length less .15 m. end lap	=	.96 m.
Effective area coverage per sheet	=	.92 sq. m.

No. of Fastener per Sheet

1. First Row	=	15 pcs./sheet
2. Succeeding Rows	=	10 pcs./sheet
3. Average no. of fasteners per sheet	=	12 pcs./sheet

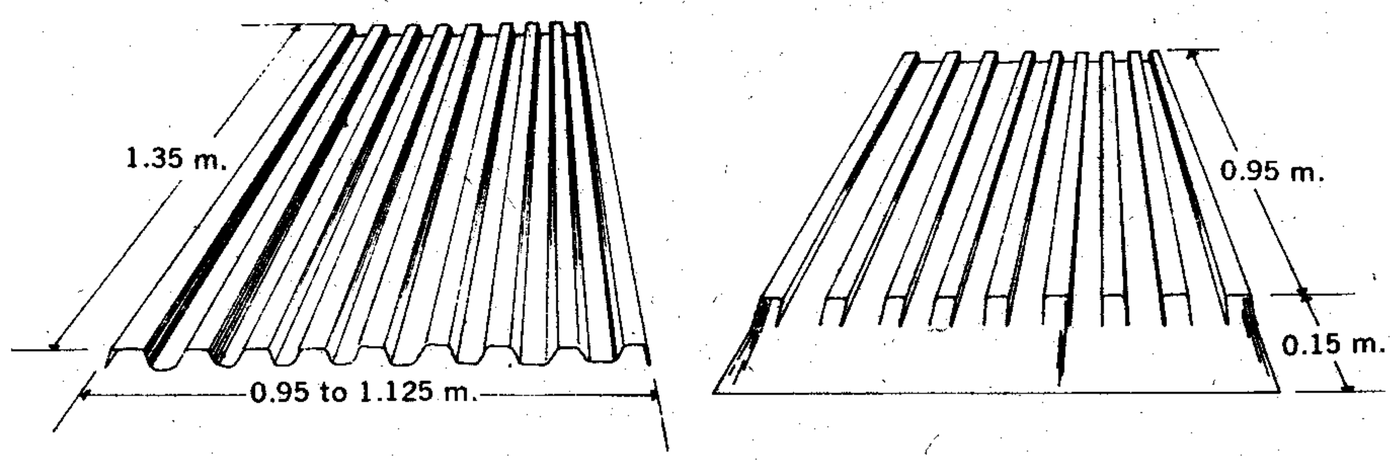

FIGURE 6-17

6-6 COLORBOND CUSTOM ORB

Technical Data:

Nominal Width	=	.86 m.
Effective Coverage	=	.76 m.
Length: Available up to longer length	=	Special Order
Maximum recommended length for continuous sheet without expansion joints	=	24 m.

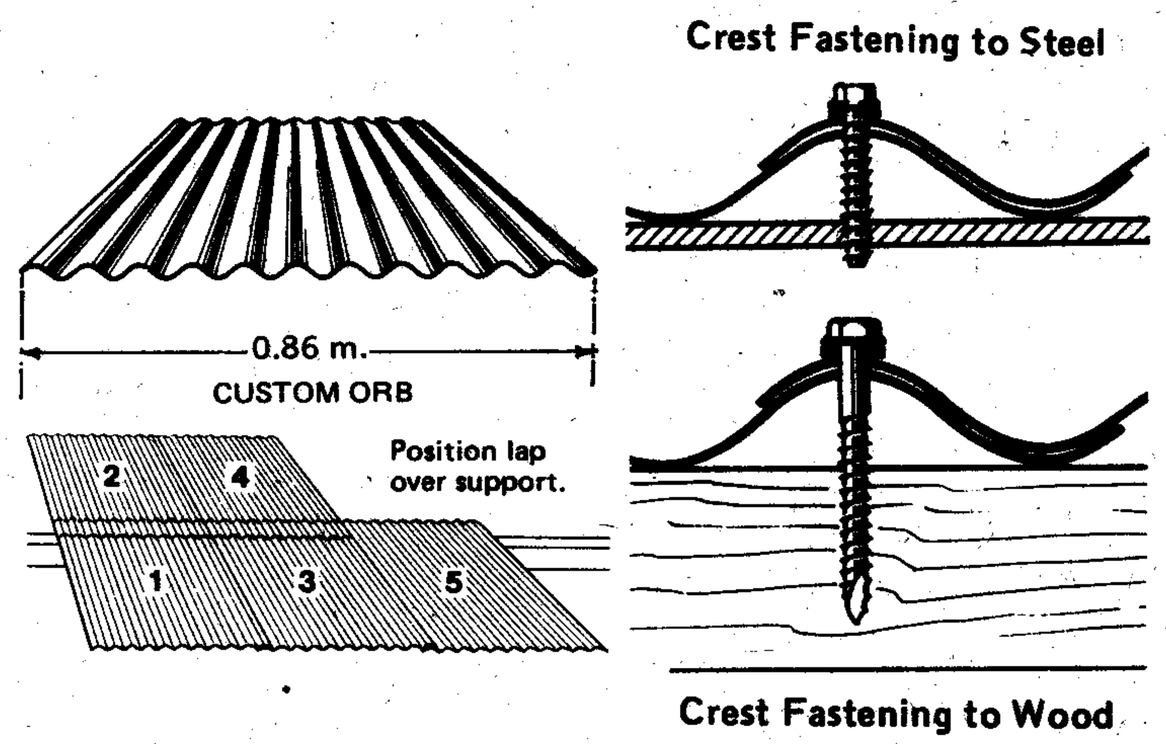

FIGURE 6-18

6-7 MILANO LONGSPAN STEEL BRICKS

Technical Data:

Steel based thickness	= 0.40 mm. (No. 26)
Total coated thickness	= 0.43 mm.
Weight per Sq. M.	= 4.53 kg./m^2
Weight per Length	= 3.44 kg./m.^{2}
Effective coverage	= .67 m.
Length up to	= 6.00 m.
Longer length	= Special Order
Recommended roof slope	= 10° min.

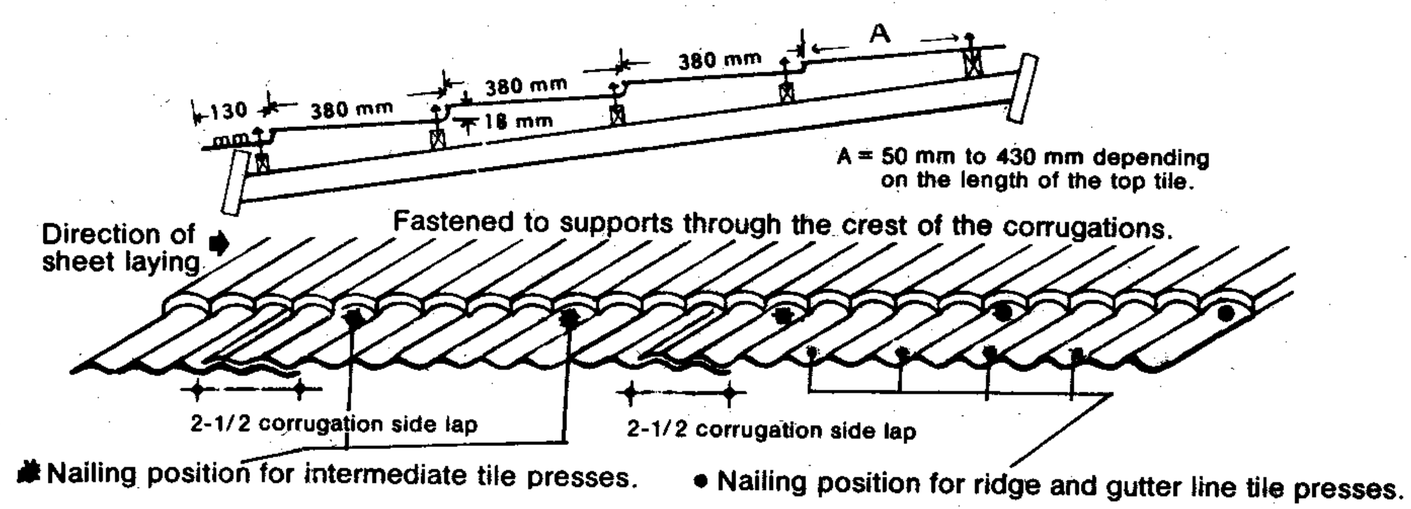

FIGURE 6-19

6-8 COLORBOND TRIMDEK HI-TEN

Technical Data

Steel Base thickness	= 0.40 mm.
Total coated thickness	= 0.46 mm.
Weight:	
Per Unit Area	= 4.28 kg./m^2
Per Unit Lenth	= 3.26 kg./m^2
Nominal Width	= 0.83 m.
Effective Width coverage	= 0.76 m.
Available length up to	= 15 m.
Longer length	= Special Order
Minimum slope	
1. Single sheet	= 3
2 Roof with end lap	= 5

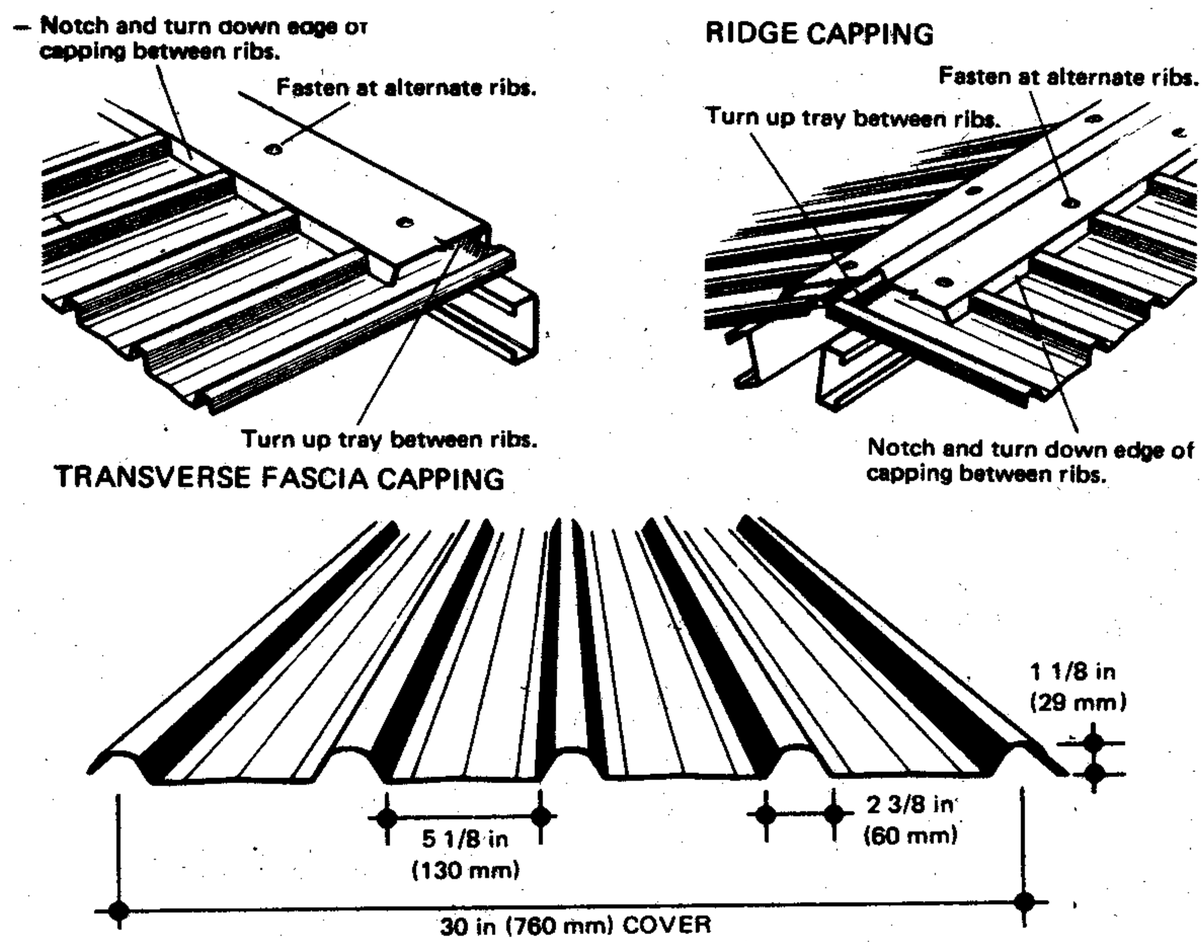

FIGURE 6-20

Fasteners:

1. **For Hardwood:** Use type 17 self drilling wood screw No. 12 x 50 mm. hexagonal head with neoprene washer.

2. **For Softwood:** Add 12 mm to length of screw.

3. There should be four fasteners per sheet at all supports.

4. Side lap fasteners use type S point self drilling screw No. 10 x 16 mm hexagonal head with neoprene washers.

5. Teks self drilling screw to steel supporters up to 4.5 mm thick use No. 12 x 45 mm. hexagonal head with neoprene washer.

TABLE 6-16 DESCRIPTION AND CONSTRUCTION DATA

Description	Weight Per Pcs. in Kg.	Total No. of Pcs. Needed	
Marceille Type (Flat)	3.60	Per Sq. M.	14.0
Ondula Type (Wavy)	4.00	Per Sq. M.	15.0
Sr. (Standard Ridge)	2.80	Per Lin. M.	2.5
Half-Marceille	2.00	Per Line	1.0
JRT - 1	3.00	Per Sq. M.	13.0
JRT - 2	3.75	Per Lin. M.	4.0
JRT - 3	3.20	Per Line	1.0
JRT - 4	3.20	Per Line	1.0
JRT - 5	2.20	Per Lin. M.	4.0
SRT - 1	4.00	Per Sq. M.	13.0
SRT - 2	2.20	Per Line	1.0
SRT - L	2.25	Per Line	1.0
SRT - R	2.25	Per Line	1.0
JSR -	2.00	Per Line M.	4.0
SRT - U	1.75	Per Sq. M.	25.0
SRT - T	1.50	Per Sq. M.	25.0
JSR	3.00	Per Lin. M.	4.0

chapter 7

TILEWORK

7-1 CERAMIC TILES

Ceramic tile is one of man's oldest building material continuously in use due to its unique, functional and decorative properties. Ceramic tiles offer an almost unlimited choice of patterns and colors which does not fade and is practically undestructible.

The decorative ceramic tiles are widely used during the period of the Medieval Islamic Architecture from Persia to Spain and was extended up to the period of the contemporary Architecture.

Ceramic tiles are classified as:

1. **Glazed Tiles** - are principally used for walls and light duty floors.

2. **Unglazed Tiles** - are hard, dense and homogeneous composition, primarily used for floors and walls.

Types of Tiles

1. **Porcelain tiles** are made from the pressed dust processed into fine grain, smooth, dense and shapely formed face.

2. **Natural clay tiles** are made from either the pressed method or the plastic method from dust clay that produced a dense body with distinctive slightly texture appearance.

3. **Ceramic mosaic tiles** are mounted on a 30 cm. x 30 cm. paper as binder of the tiles to facilitate its laying or setting.

4. **Quarry tiles** are made through the plastic extraction process from natural clay or shale.

5. **Faience Mosaic Tiles** are tiles less than 15 square centimeters in facial form.

6. **Special purpose tile are:**

   a. Nonslip tiles
   b. Ship or Gally
   c. Frostproof tiles
   d. Conductive tiles

Illustration 7-1

From Figure 7-1, solve for the following materials:

a. .30 x .30 m. floor mosaic tiles
b. .106 x .106 m. wall glazed tiles
c. Internal bead and capping
d. Internal corner bead
e. External corner bead
f. Ordinary portland cement
g. White cement

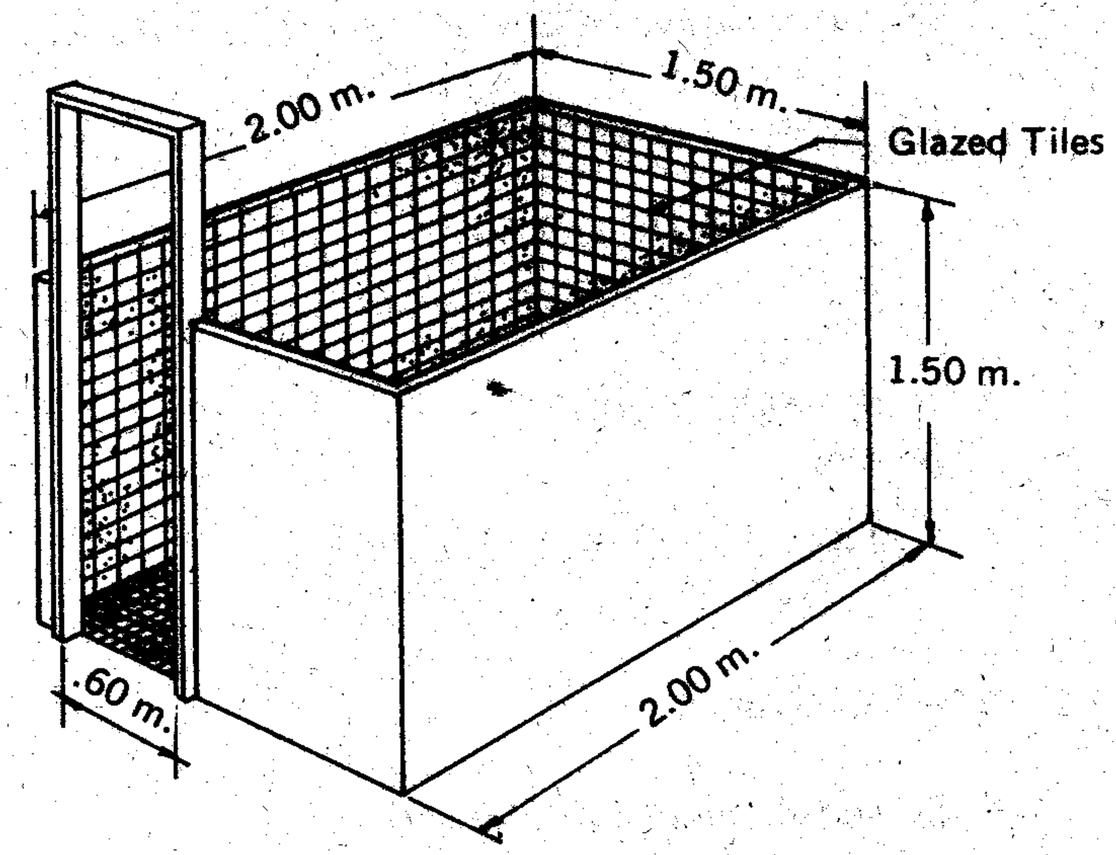

FIGURE 7-1

Solution

A. Mosaic Tile Flooring

1. Solve for the floor area

   1.50 x 2.00 = 3.0 sq. m.

2. Referring to Table 7-1

   3.0 x 10.76 = 32.3 say-33 pcs.

B. Glazed Tiles for Walls

1. Solve for the total lateral area of the wall.

   2(2.00) + (1.50 + .75) x 1.50 ht.

   = 6.25 x 1.50

   = 9.37 say 9.4 sq. m.

2. Referring to Table 7-1
   Multiply:

   9.4 x 85.7 = 805.6 say 806 pcs.

C. Internal Bead

1. Solve for the length of inside corner

   2(2.00) + (1.50 + 1.50) = 7.00 m.

2. Length of the 4 wall corners:

   4(1.50) + 7.00 m.

   6.00 + 7.00 = 13.00 m.

3. Referring to Table 7-1
   Multiply:

   13.00 x 9 = 117 pcs.

D. Capping

1. Solve for the perimeter of the wall tiles

   2(2.00) + 150 + .75 = 6.25 m.

2. Add capping along door jamb = 3.00 m.
Total = 9.25 m

3. Referring to Table 7-1

9.25 x 9 = 83.2 say 84 pcs.

E. Internal Corner Bead

By Direct Counting = 4 pcs.

F. External Corner Bead = 4 pcs.

G. Ordinary Portland Cement for Paste

1. Total Area = 3.0 + 9.4 = 12.4 sq. m.

2. Referring to Table 7-1

12.4 x 3 = 37.2 kilos say 1 bag of 40 kg.

H. White Cement

12.4 x 1.0 = 12.4 say 13 kg.

Note:

The above computation does not include the concrete hollow blocks, its plastering and the concrete slab flooring. What was presented in the illustration is how to determine the quantity of ceramic tiles, its fitting accessories and the cement paste for setting.

SUMMARY

33 pcs.	.30 x .30 m. mosaic tiles
806 pcs.	.106 x .106 m. glazed tiles
117 pcs.	.106 m. Internal Bead
84 pcs.	.106 m. capping
4 pcs.	.106 m. Internal corner bead
4 pcs.	.106 m. External corner bead
1 bag	40 kg. portland cement
13 kg.	White cement

TABLE 7-1 SIZE AND QUANTITY OF CERAMIC TILES PER SQUARE METER

CLASSIFICATIONS	SIZE	NO. OF PCS. PER	
		SQ. FT.	SQ. M.
Mosaic Tiles floor	12" x 12"	1.000	10.76
Vetrified Tiles floor	3" x 3"	16.000	177.78
Glazed Tiles wall	4" x 4"	9.000	100.00
	4¼" x 4¼"	7.970	85.73
	6" x 6"	4.000	44.44
Hexagonal Tiles	2" x 2"	44.590	480.00
	3" x 3"	17.650	190.00
	4¼" x 4¼"	8.825	95.00
5 Point Hexagonal	2"	6.096	20 per m.
4 Point Hexagonal	2"	4.884	16 per m.
Capping	4¼"	2.743	9 per m.
Internal Bead	4¼"	2.743	9 per m.

External Corner Bead - By direct count
Internal Corner Bead - By direct count

White Cement Filler Mortar - 1 kilo per sq. m.
Portland Cement Paste - .076 bags per sq. m.

7-2 TERRAZO AND GRANOLITHIC

A type of marble mosaic finished that uses portland cement as base material. It has a characteristic of durability of great beauty and variety.

There are two methods of installation:

1. **Monolithic or Cast-in-Place** - The floor is cast directly on top of the concrete floor slab preferrably not less than 24 hours nor more than 6 days after the slab is poured.

2. **Pre-cast** - Where terrazo or granolithic finish are made on top of a cement mortar base molded in various tile dimensions. A dividing strips of a half hard brass with alloy zinc are used between tiles to control and localized any shrinkage or flexure cracks. The dividing strip thickness ranges from 1.56 mm to 3.12 mm or thicker depending upon the design.

Monolithic or Cast-in-Place Estimating Procedure

1. Solve for the total floor area in sq. m.
2. Multiply the area by .112 to get the number of bags of white or colored cement required.
3. Multiply the floor area by 12.5 to get the weight of the marble chips in kilogram.
4. Multiply the quantity found by the unit cost.

Illustration 7-2

For an 8.00 m. by 10.00 m. room that specify cast-in-place granolithic floor, list down the materials required.

Solution

1. Find the floor area

   8.00 x 10.00 m. = 80 sq. m.

2. White Cement

   80 x .112 = 8.96 say 9 bags

3. Marble chips

   80 x 12.5 = 1,000 kg.

TABLE 7-2 TERRAZO AND GRANOLITHIC TILES

STOCK SIZE	PIECES PER SQ. M.	CEMENT IN BAGS PER SQ. M. MIXTURE A	CEMENT IN BAGS PER SQ. M. MIXTURE B	SAND	BRASS DIVIDER IN M. PER SQ. M.
.20 x .20	25.00	.338	.225	.0188	10.8
.225 x .225	19.75	.338	.225	.0188	10.0
.25 x .25	16.00	.338	.225	.0188	8.9
.30 x .30	11.11	.388	.225	.0188	8.0
.35 x .35	8.16	.338	.225	.0188	6.0
.40 x .40	6.25	.338	.225	.0188	5.8

Illustration 7-3

A room with a general floor dimension of 10.00 m. x 20.00 m. specify a .40 x .40 m. granolithic floor on a class B mortar base. Find the number of .40 m. tiles, cement, sand for mortar and the brass divider.

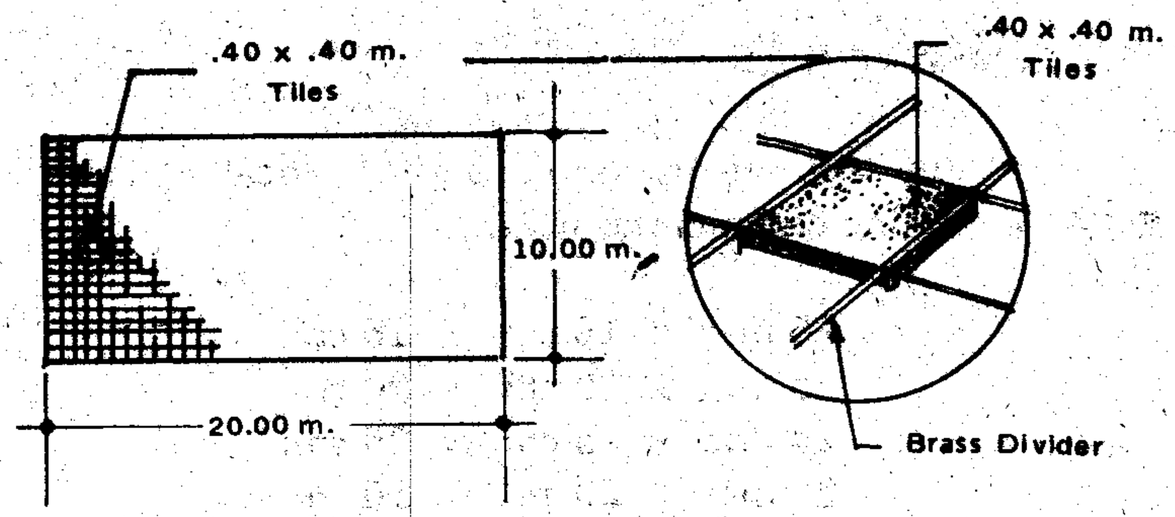

FIGURE 7-2

Solution

1. Solve for the floor area.

   10 m. x 20 m. = 200 sq. m.

2. Referring to Table 7-2

   200 x 6.25 = 1,250 pcs.

3. Solve for the cement using class B mortar

   200 x .225 = 45 bags

4. Sand: Referring to Table 7-2

   Multiply:

   200 x .0188 = 3.7 say 4 cu. m.

5. Brass divider, From Table 7-2

   200 x 5.8 = 1,160 meters

7-3 CEMENT TILES

Cement tiles are hydraulic pressed, locally manufactured in the following commercial sizes.

25 mm x 15 cm. x 15 cm.
25 mm x 20 cm. x 20 cm.
25 mm x 25 cm. x 25 cm.
25 mm x 30 cm. x 30 cm.

Estimating the number of cement tile includes the cement mortar computed at an average thickness of 20 mm.

The methods of computation are either by:

1. Unit measure method
2. Square meter area method

Illustration 7-4

Find the number of .20 m. by .20 m. cement tiles required for a 7.00 x 9.00 m. classroom using class B mortar.

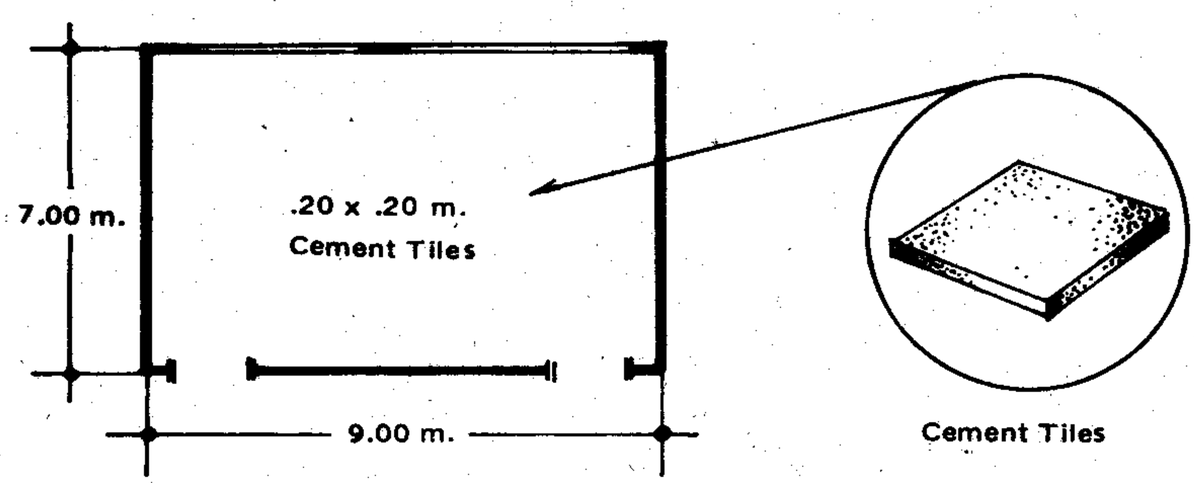

FIGURE 7-3

Solution by the Unit Measure Method

1. Divide:

$$\frac{7.00}{.20} = 35 \text{ pcs.}$$

$$\frac{9.00}{.20} = 45 \text{ pcs.}$$

2. Multiply:

35 x 45 = 1,575 pcs.

3. Cement Mortar from Table 7-2

7.00 x 9.00 x .0188 = 1.18 cu. m.

4. Referring to Table 2-1

Multiply:

Cement: 1.18 x 12 = 14.16 bags
Sand : 1.18 x 1.0 = 1.18 cu. m.

Solution by the Square Meter Area Method

1. Solve for the floor area

7.00 x 9.00 = 63 sq. m.

2. Referring to Table 7-2

Multiply:

63 x 25 = 1,575 pcs.

3. Mortar; using class B

Cement: 63 x .225 = 14.17 bags
Sand : 63 x .0188 = 1.18 cu.m.

Illustration 7-5

From Figure 7-4, find the number of 25 mm x .25 x .25 m. cement tiles and the mortar using class "A" mixture.

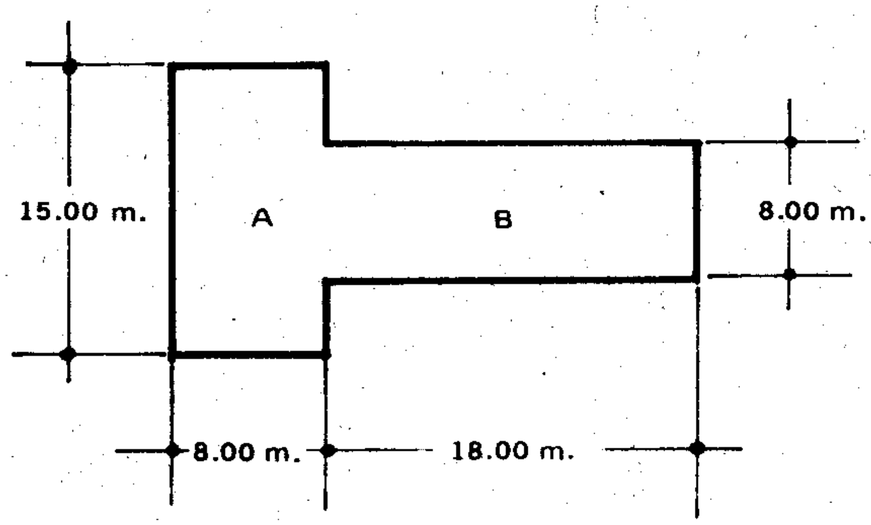

FIGURE 7-4

Solution

1. Find the total area of A and B

A = 15.00 x 8.00 = 120 sq. m.
B = 18.00 x 8.00 = 144 sq. m.
Total Area = 264 sq. m.

2. Referring to Table 7-2

Multiply:

264 x 16 = 4,224 pcs.

3. Mortar: From Table 7-2

Cement: 264 x .338 = 89.2 say 83 bags
Sand : 264 x .0188 = 4.96 say 5 cu. m.

7-4 VINYL AND RUBBER TILES

Vinyl and rubber tiles shall be non-fading, odorless and nonslip even when wet and shall be strong enough to withstand the ordinary tear and wear, cleaning and moving of furnitures without damage and shall be self dealing.

Tiles shall be laid to conform with the manufacturer's specifications. Adhesive cement shall be applied to the floor every after the tiles are laid on the surface. Tiles are pressed with linoleu roller to avoid blisters. After completion, all work shall be cleaned of cement, dirt and other substances, apply two coats of wax and polish to smooth shiny finished.

TABLE 7-3 VINYL AND RUBBER TILES

SIZE	NUMBER PER SQ. M.	GALLONS OF ADHESIVE PER SQ. METER
3 mm x .20 m x .20 m.	25.00	.042
3 mm x .225 m. x .225 m.	19.75	.042
3 mm. x .25 m x .25 m.	16.00	.042
3 mm. x .30 m. x .30 m.	11.11	.042
3 mm. x .40 m. x .40 m.	6.25	.042
3 mm. x .60 m. x .60 m.	2.78	.042

Illustration 7-6

Find the number of .30 x .30 m. vinyl tiles and its adhesive for a classroom floor measuring 7.00 x 9.00 meters.

Solution

1. Solve for the floor area

   7.00 x 9.00 = 63 sq. m.

2. Referring to Table 7-3

   63 x 11.11 = 700 pcs.

3. Adhesive cement

   63 x .042 = 2.65 say 3 gallons

chapter 8

HARDWARE

8-1 BOLTS

Bolt is a pin or a rod with a head at one end threaded at the other end to receive a nut.

Kinds of Bolt:

1. **Machine Bolt** - Has a head at one end and a short thread at the other end.

2. **Countersunk Bolt** - Has a beveled head fitting into a countersunk hole.

3. **Key Head Bolt** - Has a head shaped end fitted to a groove that will not turn when the nut is screwed into the other end.

4. **Stud Bolt** - A headless bolt threaded at both ends.

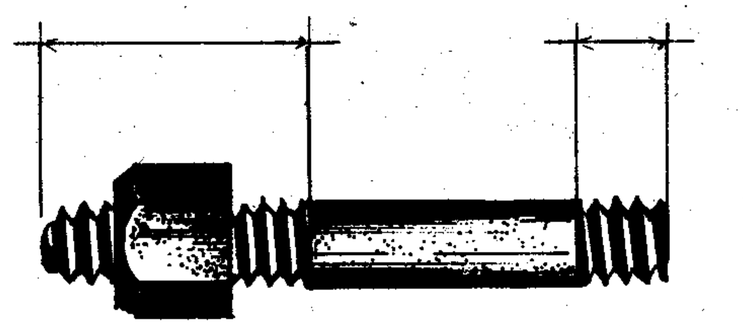

STUD BOLTS

FIGURE 8-1

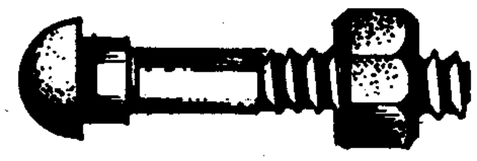

Railroad Track Bolt

Welded Eye Bolt

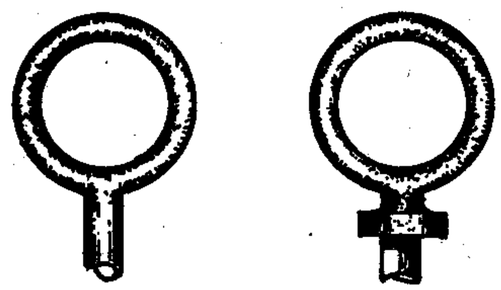

Plain and Shouldered
Forged Eye Bolts

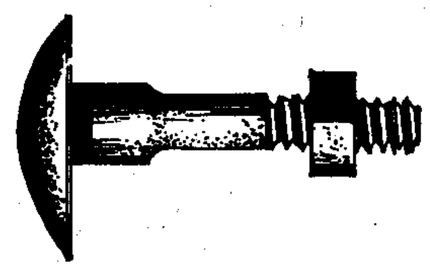

Step Bolt

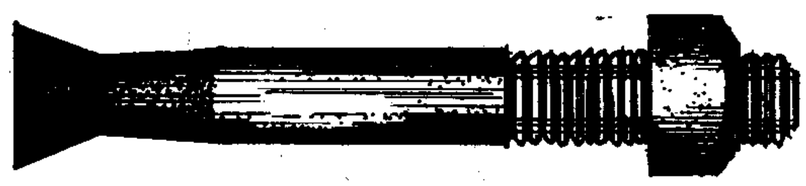

Tire Bolt

Stove Bolt

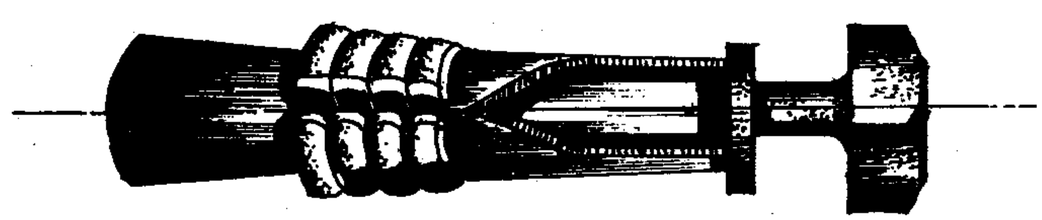

Expansion Bolt

Various Bolts

FIGURE 8-2

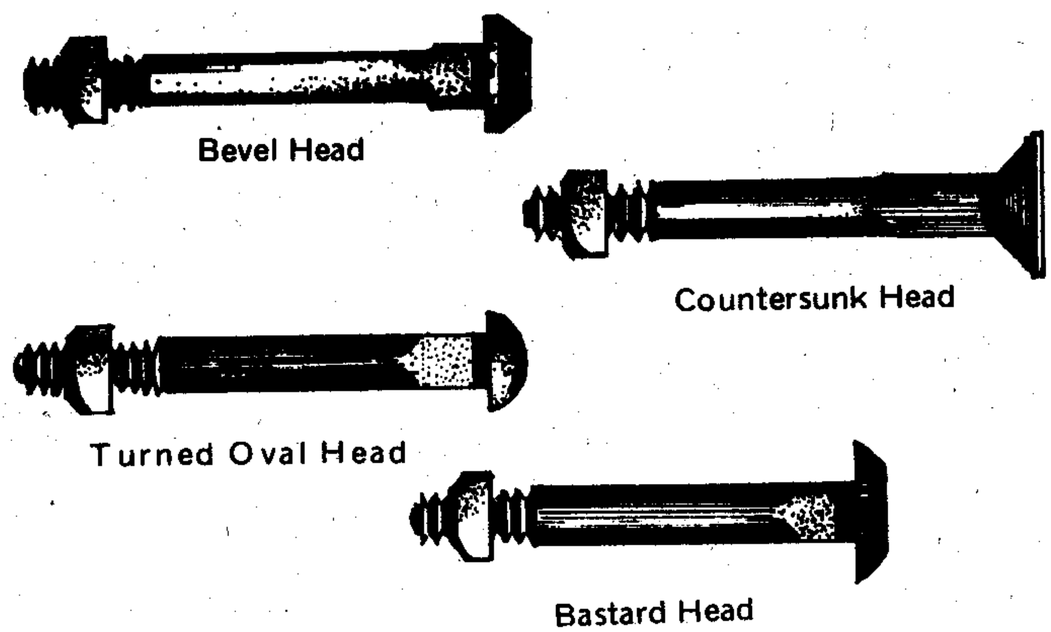

Carriage Bolts

FIGURE 8 - 3

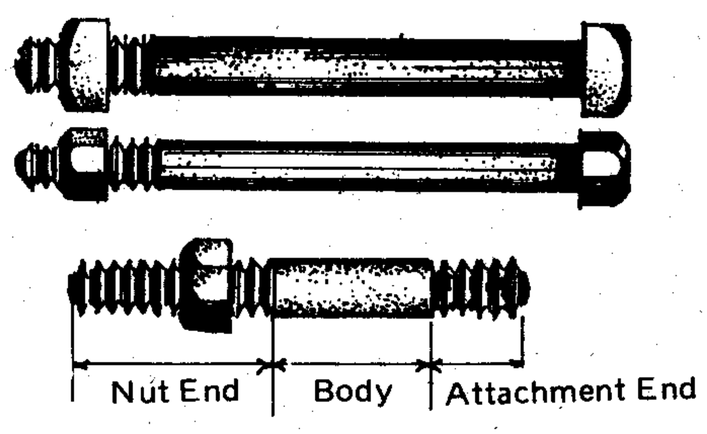

Common or Machine and Stud Bolts

FIGURE 8 - 4

TABLE 8-1 U.S. STANDARD THREAD OF BOLTS

LENGTH mm	DIAMETER OF BOLTS ½ 12	5/8 16	3/4 19	7/8 22	1 25	1-1/8 28	1¼ 31
10	1.44	2.45	3.64	5.24	7.23	9.78	12.60
12.5	1.69	2.85	4.21	6.01	8.24	11.06	14.18
15	1.94	3.24	4.78	6.78	9.26	12.33	15.76
17.5	2.19	3.64	5.35	7.55	10.27	13.61	17.35
20	2.45	4.03	5.92	8.32	11.29	14.89	18.93
22.5	2.70	4.43	6.49	9.09	12.30	16.17	20.51
25	2.95	4.82	7.06	9.86	13.31	17.44	22.09
27.5	3.20	5.22	7.63	10.63	14.33	18.72	23.67
30	3.46	5.61	8.20	11.40	15.34	20.00	25.26
32.5	3.71	6.01	8.77	12.17	16.36	21.27	26.84
35	3.96	6.40	9.34	12.94	17.37	22.55	28.42

TABLE 8-2 WEIGHT OF BOLTS, WITH SQUARE HEADS AND HEXAGONAL NUTS PER 10 BOLT

Diameter: of Bolts:	¼	5/16	3/8	7/16	½	9/16	5/8	3/4	7/8	1	In.
	6	7	9	10	12	14	16	19	22	25	mm
No. of Thread per inch:	20	18	16	14	13	12	11	10	9	9	
Diameter of: Top Drill	5	6	8	9	11	12	13	18	19	22	mm
	13/64	¼	5/16	23/64	27/64	15/64	17/32				
	13/64	¼	5/16	23/64	27/64	15/64	17/32	32/64	3/4	55/64	In.

TABLE 8-3 POST ROUGH HARDWARE

SIZE OF POST in mm	W.I. POST Strap	P.S. No.	BOLT Diam:	W.I. SPLICE Strap	S.S. No.	BOLT Diam:
10 x 10	56.25 x 62.5 x 600	2	12 mm	56.25 x 37 x 900	4	12 mm
12.5 x 12.5						
15 x 15						
17.5 x 17.5						
20 x 20	56.25 x 50 x 600	2	16 mm	56.25 x 50 x 600	4	16 mm
22.5 x 22.5						
25 x 25						
27.5 x 27.5	59 x 62.5 x 600	2	19 mm	59 x 62.5 x 900	4	19 mm

Estimating Procedure:

1. **Post strap or Splice Strap** = the length of the bolt is equal to the width of the post plus 25 mm.

$$L = W + 25 \text{ mm.}$$

2. Post and single beam (with 25 mm dap)

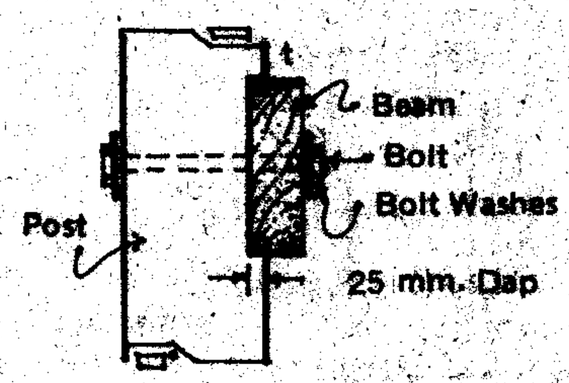

FIGURE 8-5

Length of Bolt = width of the post plus the thickness of the beam.

$$L = w + t$$

3. Post and two beams of same thickness with 25 mm dap.

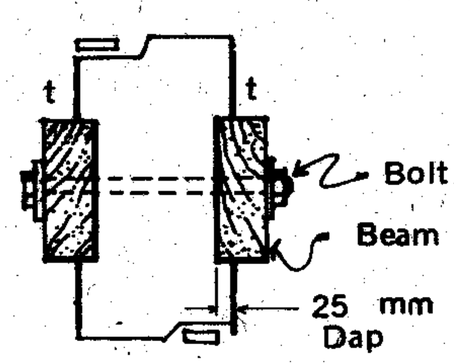

FIGURE 8-6

Length of Bolt = Width of the post plus 2 thickness of beam minus 25 mm.

$$L = W + 2t - 25 \text{ mm.}$$

4. Post and 2 beams of different thickness

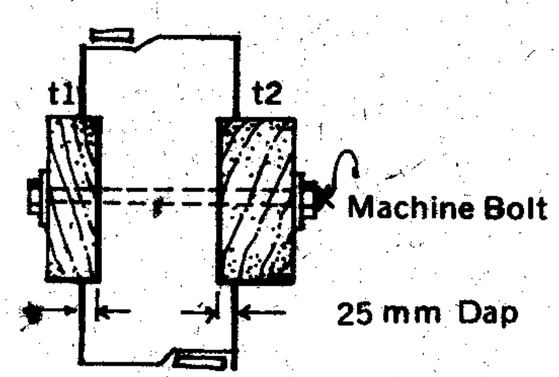

FIGURE 8-7

Length of Bolt = Width of the post plus t1 + t2-25mm

$$L = W + (t1 + t2) - 25 \text{ mm.}$$

5. On Trusses

Length of Bolts = thickness of the member in layer plus 25 mm.

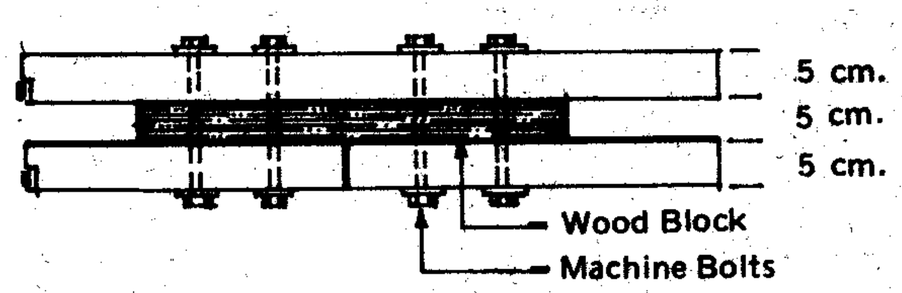

FIGURE 8-8

Example: 3 x 50 mm = 150 mm + 25 mm
= 175 mm.

TABLE 8-4 POST ROUGH HARDWARE

SIZE OF WOOD POST in cm.	W.I. STRAP mm	BOLTS No. & Dia. mm.	W.I. SPLICE Strap mm.	SPLICE BOLTS No. & Dia. mm.
10 x 10 12.5 x 12.5 15 x 15	2 - 6 x 62 x 600	2 - 12	2 - 6 x 37 x 800	4 - 12
17.5 x 17.5 20 x 20 22.5 x 22.5	2 - 6 x 62 x 600	2 - 16	2 - 6 x 50 x 800	4 - 16
25 x 25 30 x 30	2 - 9 x 62 x 600	2 - 20	2 - 9 x 62 x 800	4 - 20

8-2 SCREW

In carpentry work, screw is sometimes used instead of nails due to the following advantages:

1. Greater holding power
2. Neat in appearance
3. Less chance of injuring the materials
4. Ease of removal in case of repair

Kinds of Screw

A. Wood screw - Is a screw nail with handed coarse thread to give a grip.

Materials Used

1. Iron
2. Steel
3. Brass
4. Copper
5. Bronze

Shape of the Head

1. Flat
2. Round
3. Fillister
4. Oval
5. Winged
6. Bung
7. Punched
8. Headless
9. Slotted (Wood Screw)
10. Square (Lag Screw)
11. Hexagonal
12. Clove
13. Grooved

Shape of the Point

1. Standard
3. Coarse
2. Full length

Duty

1. Wood (light duty)
2. Lag (heavy duty)

Finish

1. Bright
2. Blued
3. Nickel Plated
4. Silver Plated
5. Brass
6. Bronzed
7. Coppered
8. Japanned
9. Lacquered
10. Tinned
11. Galvanized

Length of Screw

One important thing to know in ordering screw is its length to avoid confusion and mistake.

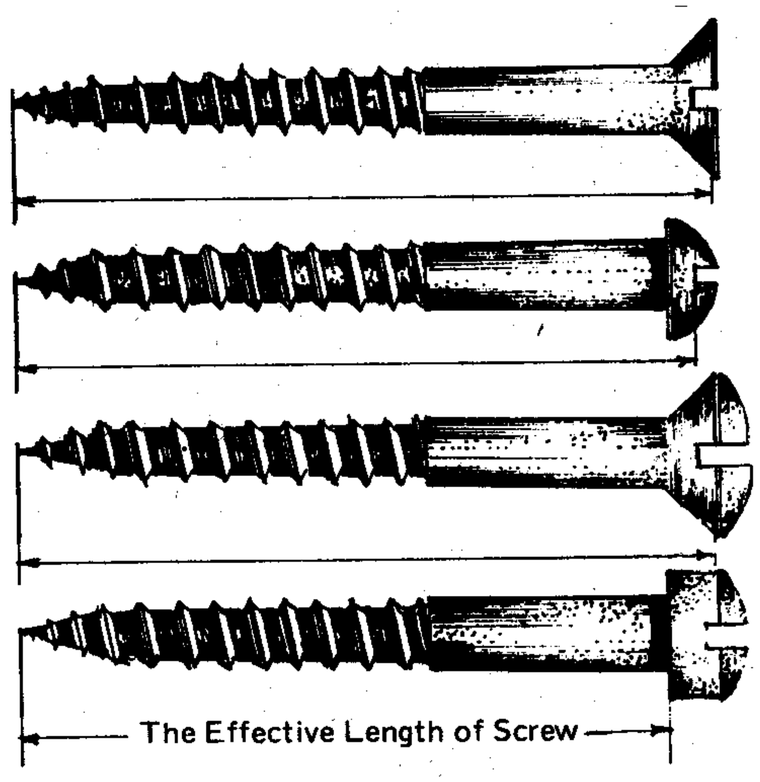

Standard Wood Screw Point

FIGURE 8-9

Ordinary Lag Screw

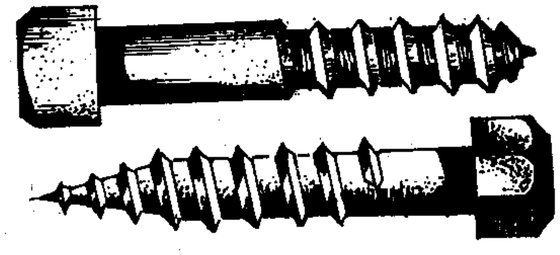

Coach Lag Screw

FIGURE 8-10

There are three shapes of point

1. **Gimlet** - used on wood and coach screws.
2. **Diamond** - is used when more driving is done before turning as in drive and lag screw.
3. **Conical** - same as diamond.

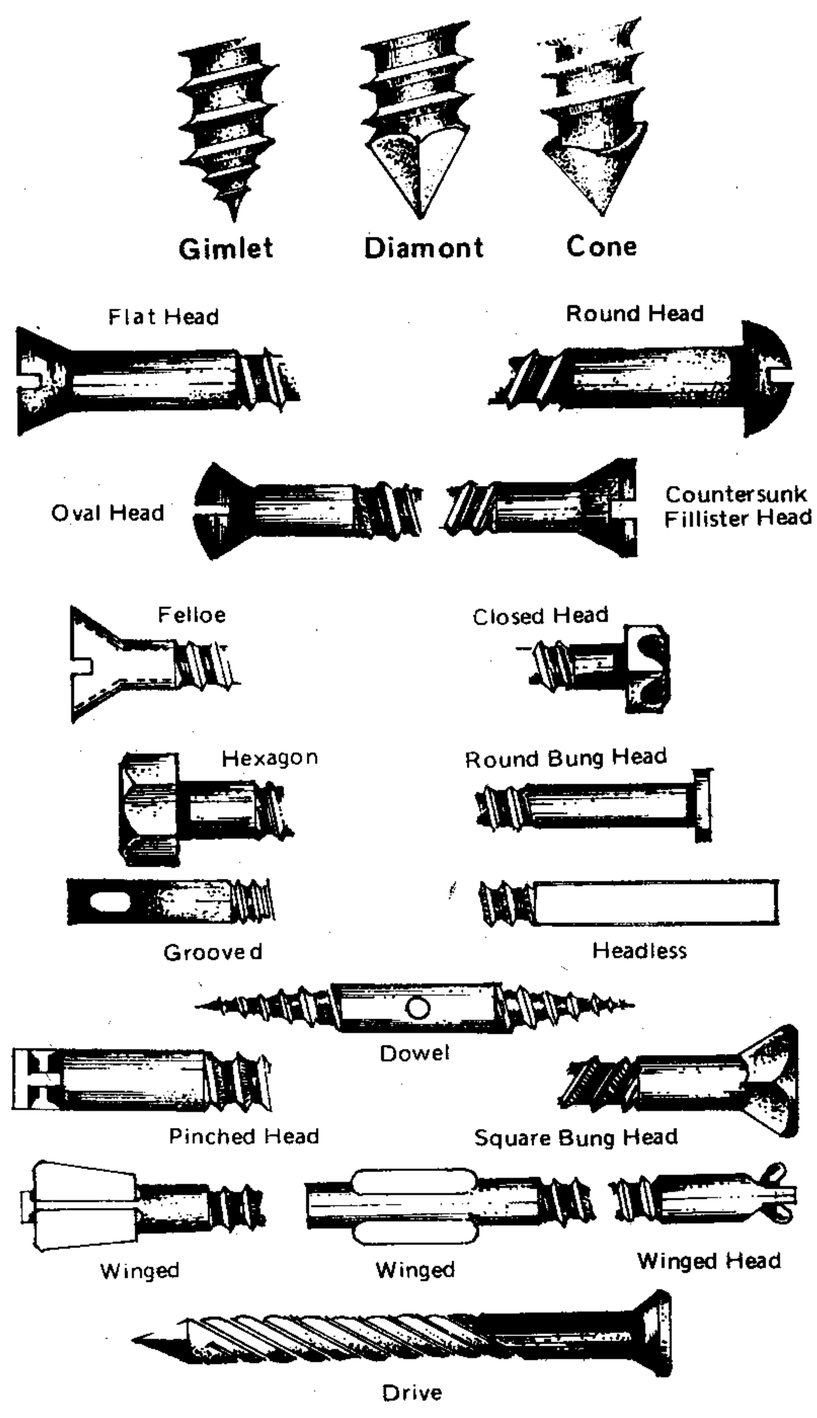

(Various Wood Screws

FIGURE 8-11

TABLE 8-5 STANDARD WOOD SCREW AND NUMBER PER KILOGRAM

Inches:	½	1	1½	2	2½	3	3½	4	4½	5	6
m. m.	12	25	37	50	62	75	87	100	112	125	150
Number	6,211	3,443	2,329	1,779	1,414	1,186	1,126	910	739	655	515

8-3 NAILS

The first handmade nails were used in the United States which lasted up to the end of the Colonial Period. In France, light nails for carpenters were made by hand and hammer out of steel wire as early as the days of Napoleon I. In the United States the wire nails were first made in 1851 by William Herser of New York and later in 1876 Father Goebel introduced the manufacture of wire nails. At the last part of the 18th century, twenty three patents for nail making machine were approved in the United States which was later introduced in England.

Kinds of Nail as to:

1. Cross-Sectional Shape

a) Cut (rectangular)
b) Wire (circular)

2. Size

a) Tracks
b) Sprigs
c) Brads
d) Nails
e) Spike

3. Materials

a) Steel
b) Brass
c) Copper

4. Finish

a) Plain
b) Coated
c) Galvanized
d) Blued

5. Service

a) Common
b) Flooring
c) Finishing
d) Roofing
e) Boat, etc.

A. Tacks

Is a small sharp pointed nails with tapering sides and a thin flat head.

Tacks are nails chiefly used in fastening carpets and flashing of any thin materials.

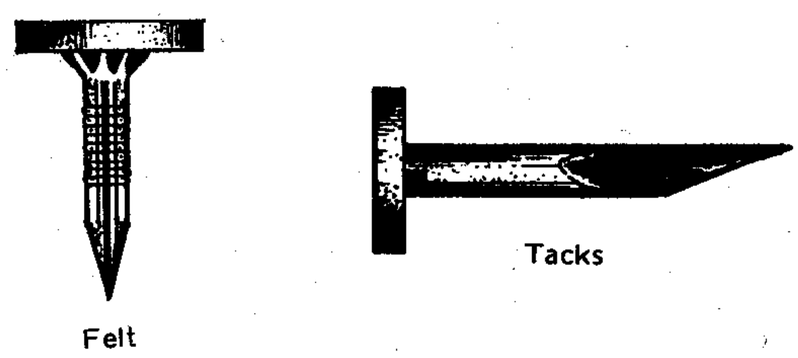

FIGURE 8-12

B. Sprigs

Small headless nails sometimes called barbed dowel pins. The regular size of sprigs ranges from 12 mm. to 5.0 cm. gauge No. 8 wire or 4 mm. diameter.

C. Brads

Small slender nails with small deep heads. The common variety is made in sizes from 2.5 cm. (2d) to 15 cm. (6d) in length while the flooring brads - from 5 cm. to 10 cm. length.

D. Nails

A popular name for all kinds of nail except those extreme sizes such as Tacks and Spikes. The most generally used are called Common Nails of sizes from 2.5 cm. to 15 cm.

E. Spikes

An ordinary spike is a stout piece of metal from 7.5 cm. to 30 cm. in length, much thicker in proportion than a common nail.

Spike is much used in attaching railroad rails, construction of docks, piers and other work that uses large timber.

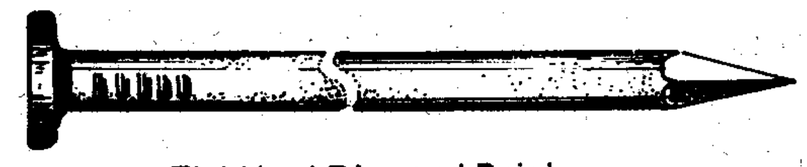

Flat Head Diamond Point

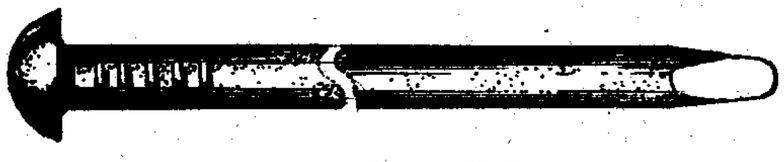

Oval Head Chisel Point

FIGURE 8-13

Two Kinds of Spikes

a) Flat Head, diamond point
b) Oval Head, chisel point

F. Boat Spikes

A small kind of nail driven mostly in hard timber with a clear cut sharp chisel point.

TABLE 8-6 NUMBER OF WIRE TACKS PER KILO

INCHES	LENGTH mm.	NUMBER PER KILO
1/8	3	35,200
3/16	5	23,465
1/4	6	17,600
5/16	8	14,080
3/8	10	11,732
7/16	12	8,800
9/16	14	5,865
5/8	16	4,400
11/16	17	10,120
3/4	19	2,930
13/16	20.5	2,514
7/8	22	1,200
15/16	24	1,953
1	25	1,760
1-1/16	27	1,599
1-1/8	28	1,465

TABLE 8-7 FLOORING BRADS

SIZE	Length mm.	Gauge no.	Dia. Head Gauge	Approx. No./Kilo	Gauge no.	No. of Nails Per Keg.
6d	50	11	6	322	12	14,500
7d	32	11	6	277	12	12,500
8d	37	10	5	200	11	9,000
9d	44	10	5	173	11	7,800
10d	75	9	4	131	10	5,900
12d	81	8	3	95	9	4,300
16d	87	7	2	76	8	3,450
20d	100	6	1	57	7	2,600

TABLE 8-8 COMMON WIRE NAILS

SIZE	GAUGE No.	LENGTH In.	mm.	APPX. No. Per Kilo	Per Keg.
2d	15	1¼	25	1,831	82,400
3d	14	1½	31	1,177	53,000
4d	12.5	1½	37	666	30,000
5d	12.5	1¾	44	580	26,100
6d	11.5	2	50	382	17,200
7d	11.5	2¼	56	344	15,500
8d	10.25	2½	63	208	9,400
9d	10.25	2¾	69	188	8,500
10d	9	3	75	138	6,250
12d	9	3¼	81	124	5,600
16d	8	3½	88	93	4,200
20d	6	4	100	58	2,625
40d	4	5	112	45	2,040
50d	3	5½	125	34	1,540
60d	2	6	150	20	910

TABLE 8-9 COMMON BRADS

SIZE	LENGTH Inches	mm	APPX. No. Per Kilo	Per Keg
2d	1	25	1,904	85,700
3d	1¼	31	1,206	54,300
4d	1½	37	662	29,800
5d	1¾	44	566	25,500
6d	2	50	397	17,900
7d	2¼	56	340	15,300
8d	2½	63	224	10,100
9d	2¾	69	197	8,900
10d	3	75	146	6,600
12d	3¾	81	137	6,200
16d	3½	88	108	4,900
20d	4	100	68	3,100
30d	4½	112	53	2,400
40d	5	125	40	1,800
50d	5½	137	28	1,300

TABLE 8-10 ORDINARY SPIKES

SIZE	LENGTH Inches	mm	APPX. No. Per Kilo
10d	3	75	90
12d	3¼	81	83
16d	3½	88	66
20d	4	100	50
30d	4½	112	37
40d	5	125	28
50d	5½	137	22
60d	6	150	19
175 mm	7	175	15
200 mm	8	200	9
225 mm	9	225	8
250 mm	10	250	7
300 mm	12	300	6

TABLE 8-11 USES AND APPROXIMATE QUANTITY OF NAILS

MATERIAL	UNIT PER	REQ'D. KILOS	SIZE	KIND
Floor Joist and Bridging @ .30 m. o.c.	sq. m.	.17	20d	CWN
T & G Flooring				
1 x 4"	sq. m.	.15	6d	Flooring Brad
1 x 6"	sq. m.	.09	6d	Flooring Brad
Siding Wood Board on Studs @ .60 o.c.				
1 x 6	sq. m	.08	6d	Casing Brads
1 x 8	sq. m.	.06	6d	Casing Brads
Studs:				
@.40 m. o.c.	sq. m.	.08	8d	CWN
@.60 m. o.c.	sq. m.	.05	8d	CWN
Scaffolding	M. Ht. of Post	.73	20d	CWN
Plywood Ceiling	Per Sheet @.15 o.c. on .40 x .60 m.	.055	2d	Finishing
1.20 x 2.40 m. .90 x 1.80 m.	.45 x .45 m. Joists	.033	2d	Finishing
Rafters, Purlins and Cleats	Per sq. m. Purlins @ .70 o.c.	.20	20d	CWN
Base Board	Meter length	.03	6d	CWN
Fascia Board	Meter length	.048	8d	CWN
Ceiling Joist @.40 x .60 o.c.	Sq. M.	.05	8d	CWN

Illustration 8-1

A wall partition 16.00 meters long by 3.00 meters high specify the use of 1" x 8" stone cut wood board on studs @.60 m. o.c. Determine the nails required for the studs and the wood board.

Solution

A) Nails for the studs

1. Solve for the area of the wall

   A = 20.00 x 3.00 m.
   = 60 sq. m.

2. Referring to Table 8-11 along stud @ .60 m. o.c.

   Multiply:

   60 x .05 = 3.0 kilos 8d CW Nail

B) Nails for the 1 x 8 Wood Board

1. Area = 20.00 x 3.00 m.

   A = 60 sq. m.

2. Referring to Table 8-11 along 1" x 8" board

   Multiply:

   60 x .06 = 3.6 say 4 kilos 6d CW Nail

chapter 9

STAIRCASE

9-1 Definition of Terms

Building staircase requires technical of structural carpentry and craftsmanship of cabinet making. It is like constructing an enclined bridge between two points on different floors with uniform, well proportional treads and risers that are safe and comfortable to climb and descend.

Baluster - a small post supporting the handrail or a coping.

Balustrade - a series or row of balusters joined by a handrail or a coping as the parapet of a balcony.

Bearers - a support for winders wedged into the walls secured by the stringer.

Carriage - that the portion which supports the steps of a wooden stairs.

Close String - a staircase without open well in a dog stairs.

Cocktail Stair - Is a term given to a winding staircase.

Circular Stair - a staircase with steps winding in a circle or cylinder.

Elliptical Stairs - those elliptical in plan where each tread assembly converging in an elliptical ring in a plan.

Flight of Stairs - Is the series of steps leading from one landing to another.

Front String - the string on the side of stairs where the handrail is placed.

Flyers - steps in a flight that are parallel with each other.

Geometrical Stairs - Is a flight of a stair supported by the wall at the end of the steps.

Half Space - The interval between two flights of steps in staircase.

Handrail - a rail running parallel with the inclination of the stairs that holds the balusters.

Hollow Newel - An opening in the middle of the staircase as distinguished from solid newel wherein the ends of steps are attached.

Housing - The notches in the string board of a stair for the reception of stairs.

Knee - Is the convex bend at the back of the handrail.

Landing - Is the horizontal floor as resting place in a flight.

Newel - The central column where the steps of a circular staircase wind.

Nosing - The front edge of the steps that project beyond the riser.

Pitch - The angle of inclination of the horizontal of the stairs.

Ramp - A slope surface that rises and twists simultaneously

Rise - The height of a flight of stairs from landing to landing or the height between successive treads or stairs.

Riser - The vertical face of a stair step.

Run - The horizontal distance from the first to the last riser of a stair flight.

Spandril - The angle formed by a stairway.

Staircase - Is the whole set of stairs; the structural containing a flight of a stairs.

Stair Builders Truss - Crossed beams which support the landing of a stair.

Stairhead - The initial stair at the top of a flight of stair or staircase.

Stair Headroom - The clear vertical height measured from the nosing of a stair tread to any overhead obstruction.

Stairwell - The vertical shaft which contains a staircase.

Step - A stair which consists of one tread and one riser.

Steps - The assembly consisting of a tread and a riser.

String - The part of a flight of stairs which forms its ceiling or soffit.

Soffit - The underneath of an arch or moulding.

String Board - The board next to the wall hole which receives the ends of the steps.

Tread - The horizontal part of a step including the nosing.

Tread Run - The horizontal distance between two consecutive risers or on an open riser stair, the horizontal distance between the nosings or the outer edges of successive treads all measured perpendicular to the front edges of the nosing or tread.

Tread Length - The dimension of a tread measured perpendicular to the normal line of travel on a stair.

Tread Width - The dimension of a tread plus the projection of the nosing.

Wall String - The board placed against the wall to receive the end of the step.

Well - The place occupied by the plight of stairs.

Well Hole - The opening in the floor at the top of a flight of stairs.

Well Staircase - A winding staircase enclosed by walls resembling a well.

Winders - Steps not parallel with each other.

Wreath - The whole of a helically curved hand rail.

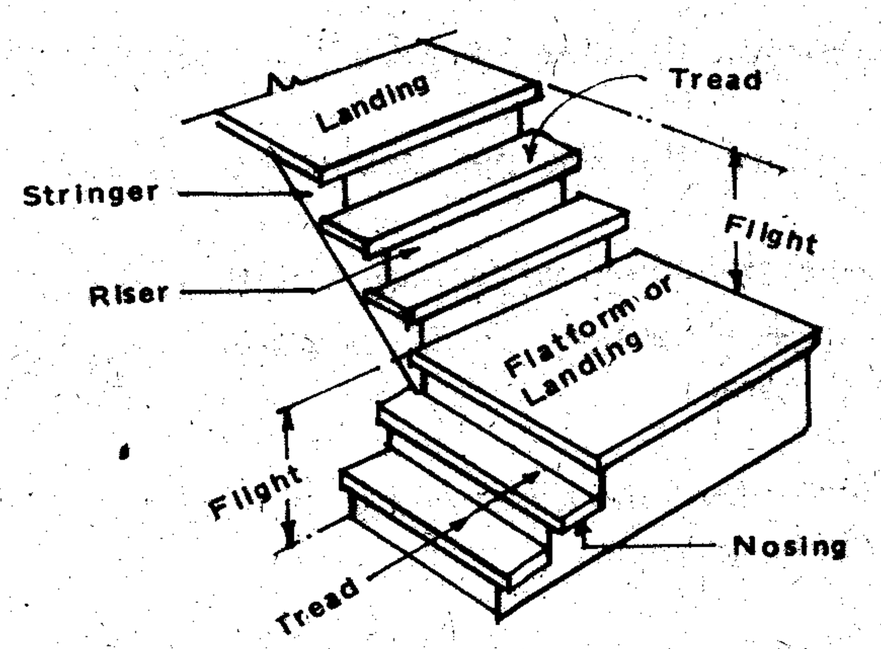

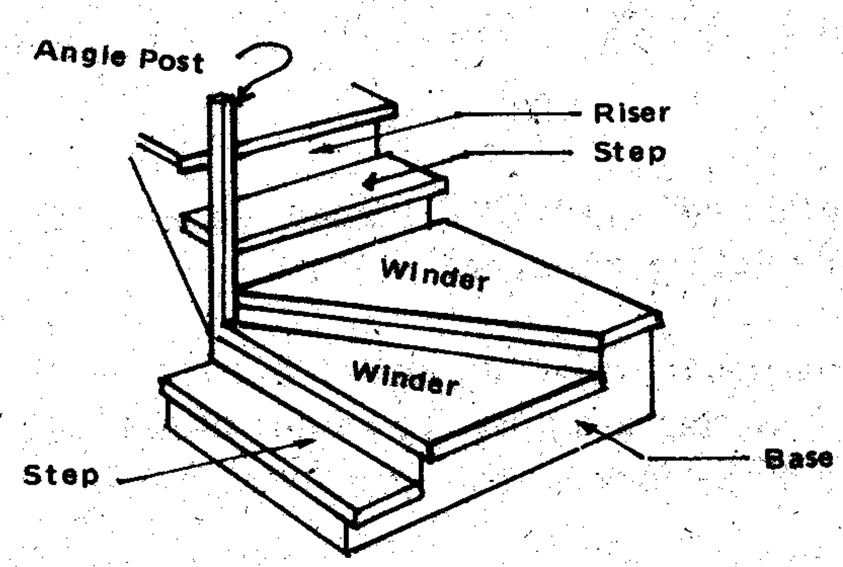

FIGURE 9-1

9-2 LAYING OUT OF STAIRS

In laying out of stairs, one has to consider the following methods:

1. Determine the clear height of the rise in meter.

   Normally, the rise per step is from 17 cm. to 18 cm.

2. Divide the height of the rise by either .17 or .18 m. to determine the number of steps from the 1st to the next floor.

3. Divide the run distance by the effective width of the tread as follows:

Width of Tread	Effective Width
For .25 m.	.20 m.
For .30 m.	.25 m.

   The effective width of the tread is equals the width minus the nosing computed at .05 m.

4. If the result found in step 3 is less than the number found in step 2 adjust the length of the run to obtain an equal distances and proportional steps.

5. The height of the risers should be uniform from the first to the last step of the stair, hence, there should be no fractional value in dividing the rise by the riser per step. However, if fractional value could not be avoided in dividing the rise by the riser, adjust the fractional

value in equal proportion to the number of risers but in no case shall the riser per step be greater than .19 nor less than .17 m. otherwise, the stairs will not be an ideal and comfortable one.

Illustration 9-1

Determine the number of steps and the height of the riser of a stair case if the height of the rise is 2.20 m. using a .30 m. tread width.

Solution

1. The height of the rise is 2.20 meters.

2. Assume that the riser per step is .17 m.
   Divide:

$$\frac{\text{Rise}}{\text{Riser}} = \text{No. of risers}$$

$$\frac{2.20}{.17} = 12.94$$

3. The answer has a fractional value of .94 but the rule says, "there should be no fractional value in dividing the rise by the riser." Therefore we have to adjust.

4. Divide the rise by the whole value of 12 disregarding the fractional value of .94.

$$\frac{2.20}{12} = .183 \text{ m.}$$

5. The .183 m. is now the height of the risers per step which is equivalent to 18.3 cm. This value is not more than 19 cm. nor less than 17 cm. hence, considered as ideal and comfortable.

6. Determine the distance of the run under the following formula.

   Run = No. of Steps - 1 x Effective width of the tread

   Where:

   Effective Width = Tread Width - Nosing

   Nosing = 5 cm. or .05 m.

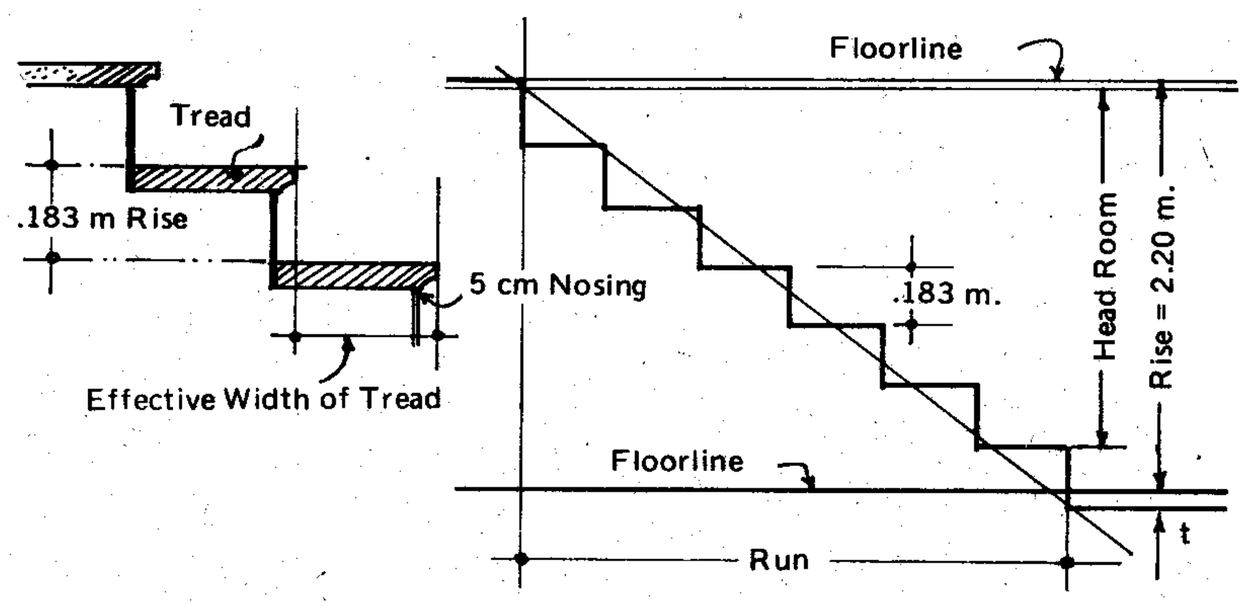

FIGURE 9-2

R = No. of steps - 1 x .025 m. (see Figure 9-3)
R = 12 - 1 x .25 m.
R = 2.75 m.

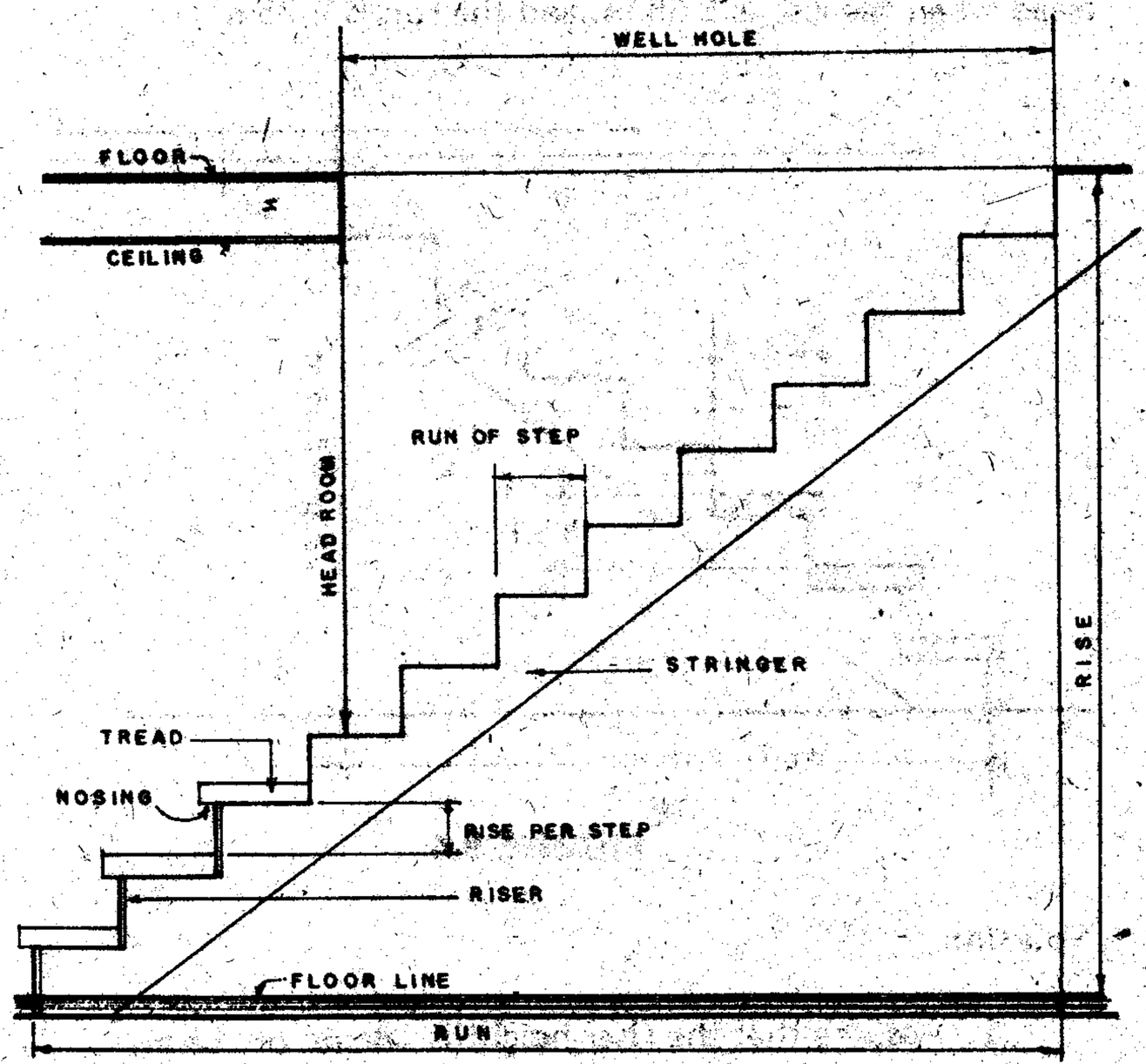

FIGURE 9-3

There are instances wherein the length of the run and the height of the rise are given or existing and the question is how to determine the width of the tread and the height of each riser.

Illustration 9-2

Determine the height of the riser and the width of the tread when the rise is 2.65 m. and the run is 2.75 m.

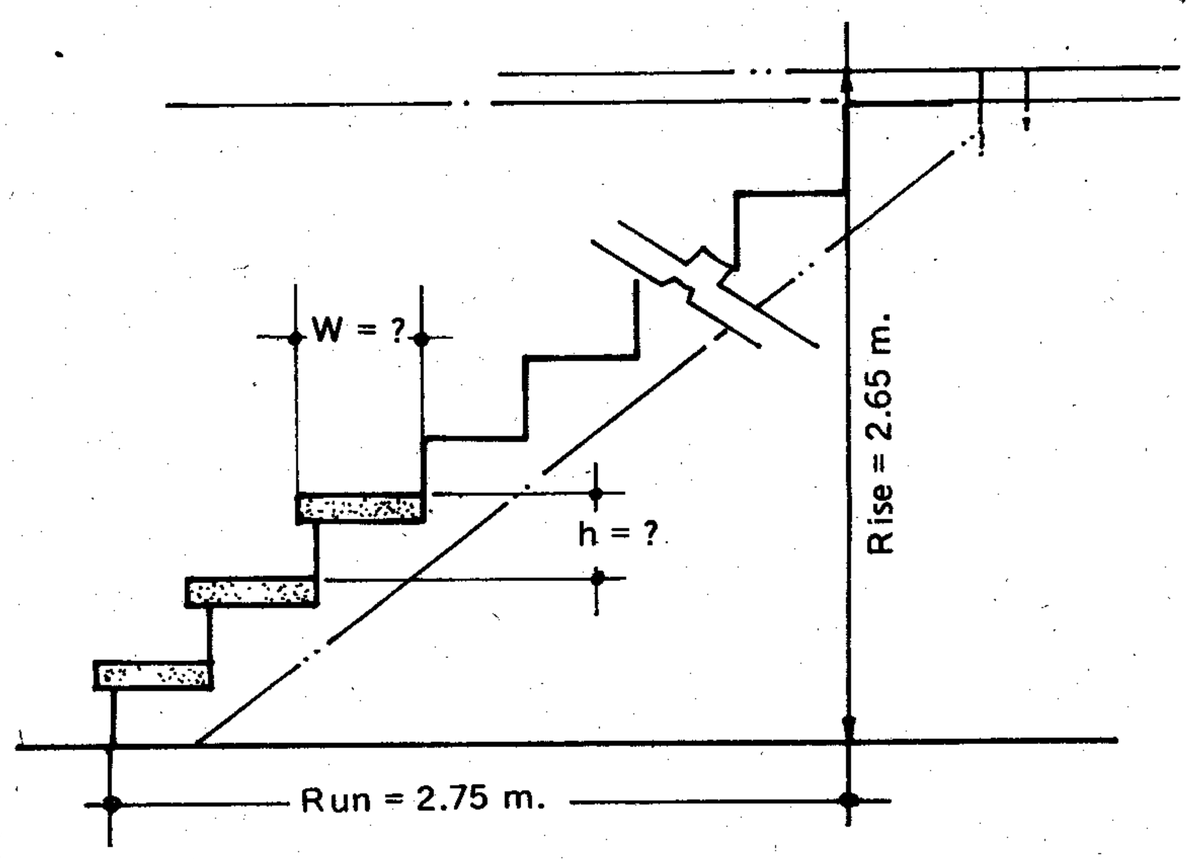

FIGURE 9-4

Solution

1. Assume that the riser height is 18 cm. or .18 m.

2. Divide the height of the rise by .18 m.

$$\frac{2.65}{.18} = 14.72 \text{ say } 15 \text{ steps}$$

3. Assuming that there are 15 steps instead of 14.72 determine the height of the riser.

$$\frac{2.65}{.15} = 1.766 \text{ m. or } 17.66 \text{ cm.}$$

This value is in between 17 to 19 cm. (acceptable)

4. Assume that the tread width is 30 cm. or .30 m. the effective width of the step is .30 - .05 nosing = .25 m.

5. If there are 15 steps, multiply by the effective width of the tread.

Run = No. of steps - 1 x .25 (see figure 9-4)
Run = (15 - 1) x .25 = 3.50 m.

Note:

The 3.50 meters is longer than the 2.75 m. distance of the run as specified in the problem, hence, adjustment of the tread width is necessary.

a. From step 4 assume the tread width to be .25 m. not .30 m.

b. Effective Width = .25 minus .05 nosing
EW = .20 m.

c. Trial multiplication:

No. of steps x E.W = Run
14 x .20 = 2.80 m.

This value is acceptable since the existing distance of the run is 2.75 m.

9-3 STRINGERS

Stringer is the inclined plane that supports or holds the tread and the riser of a stair. The length of the stringer is determined by either the use of the Pythagorian Formula or by actual measurement using a meter rule or tape. The steel square is very useful in stairway framing, know its functions and a satisfactory result will be obtained.

There are several forms of stringer classified according to the methods of attaching the risers and the tread.

1. Cut type
2. Cleated type
3. Built-up
4. Rabbeted (Housed)

Cut type stringers - are popularly employed in most modern and contemporary houses design.

Cleated type stringer - is used for a very rough work.

Built-up type stringer - is adopted on a wide stairs that requires a center stringer.

Rabbeted type stringer - is adopted on a fine work and usually made at the mill. The risers and treads are held in the rabbets by wedges set in the glue.

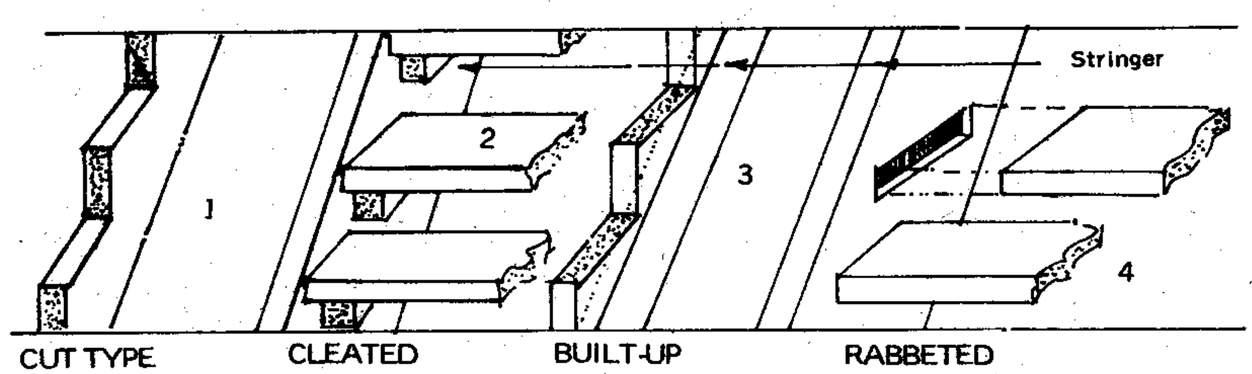

FIGURE 9-5

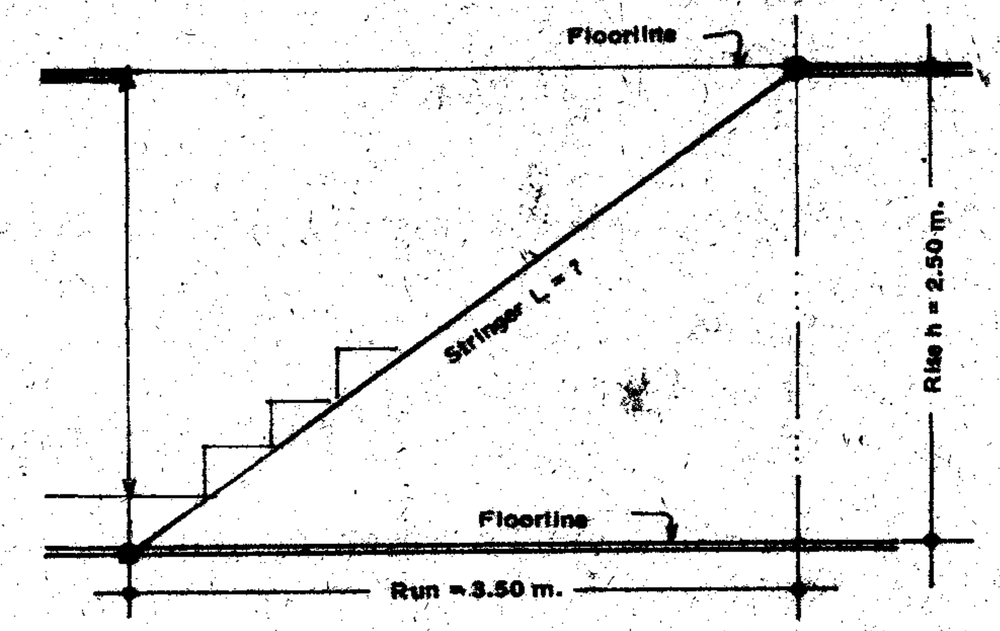

FIGURE 9-6

Illustration 9-3

Determine the length of an open wood stringer required for a stair with the following data:

Run distance = 3.50 m.
Height of the Rise = 2.50 m.

Solution

1. Using the Formula:

$$\text{Stringer length} = \sqrt{(\text{Run})^2 + (\text{Rise})^2}$$

$$SL = \sqrt{(3.50)^2 + (2.50)^2}$$

$$SL = \sqrt{12.25 + 6.25}$$

$$SL = \sqrt{18.50}$$

$$SL = 4.30 \text{ m.}$$

2. Convert to feet

$$\frac{4.30 \text{ m.}}{.30} = 14.33 \text{ ft.}$$

3. Solving for the number of steps: Assume 18 cm. riser height.

Divide:

$$\frac{\text{Riser}}{\text{Riser}} = \frac{2.50}{.18} = 13.88 \text{ say 14 steps}$$

This problem could be solved by referring to Table 9-1. See the value of 4.31 m. along the 14 steps; 3.50 m. length of run below the 30 cm. Tread and the 2.52 m. rise below the 18 cm. riser column.

TABLE 9-1 HEIGHT OF RISE, LENGTH OF STRINGER AND RUN OF STAIRWAY

NO. OF STEPS	LENGTH OF STRINGER TREAD AT		LENGTH OF RUN TREAD AT		HEIGHT OF RISE RISER HT. AT	
	25 cm. in m.	30 cm. in m.	25 cm. in m.	30 cm. in m.	17 cm. in m.	18 cm. in m.
4	1.05	1.23	.80	1.00	.68	.72
5	1.31	1.54	1.00	1.25	.85	.90
6	1.57	1.85	1.20	1.50	1.02	1.08
7	1.84	2.16	1.40	1.75	1.19	1.26
8	2.10	2.47	1.60	2.00	1.36	1.44
9	2.36	2.78	1.80	2.25	1.53	1.62
10	2.62	3.08	2.00	2.50	1.70	1.80
11	2.89	3.39	2.20	2.75	1.87	1.98
12	3.15	3.70	2.40	3.00	2.04	2.16
13	3.41	4.00	2.60	3.25	2.21	2.34
14	3.67	4.31	2.80	3.50	2.38	2.52
15	3.94	4.62	3.00	3.75	2.55	2.70
16	4.20	4.93	3.20	4.00	2.72	2.88
17	4.46	5.24	3.40	4.25	2.89	3.06
18	4.73	5.55	3.60	4.50	3.06	3.24
19	5.00	5.85	3.80	4.75	3.23	3.42
20	5.62	6.16	4.00	5.00	3.40	3.60

Stairs Angle of Inclination:

Ladder	-	50° to 90°
Ramp	-	1° to 20°
Stairs	-	20° to 50°
Ideal Stairs	-	30° to 35°

TABLE 9-2 SPIRAL STAIRS

OPEN RISER TREADS		CANTILEVER TREADS	
Tread Degrees	No. of Tread in Circle	Riser in cm.	Head Room in m.
22° - 30'	16	17.5	2.10
28° - 0'	12 - 13	18.0	2.00
30° - 0'	12 - 13	20.0	2.00

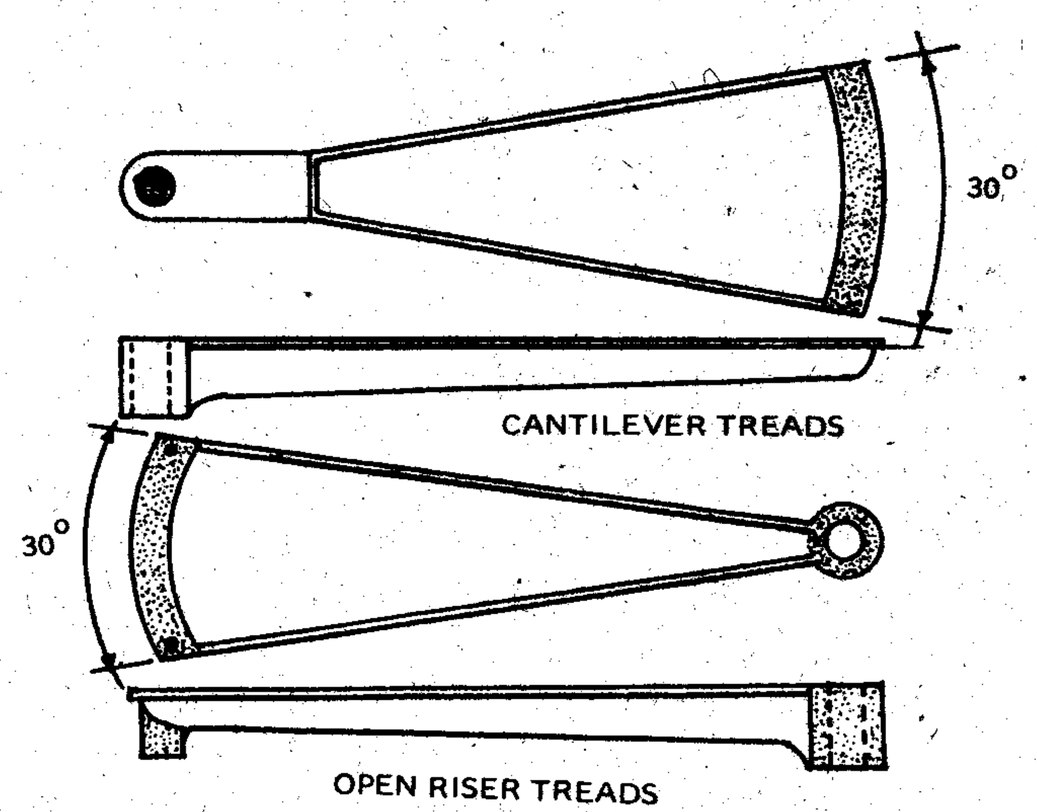

FIGURE 9-7

The Code specifies:

1. The minimum width of any stair slab and the minimum dimension of any landing should be about 1.10 m.

2. The maximum rise of a stair step is usually specified as about 18 cm. A rise less than 16 cm. is generally not considered satisfactory.

3. The minimum tread width exclusive of the nosing is 25 cm.

4. The maximum height of a straight flight between landing is generally 3.60 m. except those serving as an exit from place of assembly where a maximum height of 2.40 m. is normally specified.

5. The number of stairway is governed by the number of probable occupants per floor, width of stairway and the building floor area. The distance from any point in an open floor area to the nearest stairway shall not exceed 30 meters and that the corresponding distance along corridors in a particular area shall not exceed 38 meters.

6. The combined width of all the stairway in any floor shall accommodate at one time the total number of persons occupying the largest floor area under the condition that one person for each .33 sq. m. floor area on the landing and halls within the stairway enclosure.

7. In building of more than 12 meters height and in all mercantile buildings regardless of height, the required stairways must be completely enclosed by fireproof partitions and at least one stairway shall continue to the roof.

chapter 10

PAINTING

10-1 PAINT

Paints are commonly called **"surface coating"**. It is defined as a coating applied to a surface or subtrate to decorate, to protect, or to perform some other specialized functions.

The ingredients of paint are:

1. Vehicle
2. Solvents
3. Pigments
4. Additives

Vehicle - Is that substance in the paint which gives a film continuity and provides adhesion to the surface or subtrate. It is called vehicle because it carries the ingredients to the subtrate which will remain on the surface after the paint had dried. The vehicle contains the film former which is the combination of:

a. **Resins**
b. **Plasticisers**
c. **Drying oil, etc.**

The vehicle is divided into:

1. **Solid Thermoplastic film formers** - The solid resin is melted for application and solidifies after application.

2. **Lacquer type film formers** - The vehicle dries by solvent evaporation.

3. **Room temperature catalyzed film formers** - Chemical agents blended into the coating before application cause cross-linking into a solid polymer at room temperature.

4. **Oxidizing film formers** - Oxygen from the air enters the film and cross-links it to form a solid gel.

5. **Heat-cured film formers** - Heat causes cross linking of the film former or activates a catalyst that is not active until heat has been applied.

6. **Emulsion-type film formers** - The solvent evaporation and the droplets of plastic film former floating in it flows together to form a film.

Solvents - are low viscosity volatile liquid used in coating to improve application properties.

Pigment - paint pigments are solid grains or particles of uniform and controlled size that is generally insoluble in the vehicle of the coating. It contributes to the following properties:

a) **For the decoration function,** it contributes opacity, color and gloss control.

b) For the protective function - it contributes specific properties such as hardness, resistance to corrosion, resistance to rapid weathering, abrassion, and improved adhesion.

c) It serves as in ease of sanding, flame retardance and electrical conductivity.

d) Pigments are also used to fill space in paint films.

Additives - are ingredients formulated into the paint to modify the properties of either the vehicle or the pigmentation or both. They give the wet paint or dried paint film properties not present in the vehicle and pigmentation system. Additives improve a certain properties of vehicle such as speed drying, pigment resistance to fading or the entire paint such as the ease of application.

A good quality paint must have the following essential and specific properties.

1. **Adhesion** - coating must stick to the surface or subtrate to bring other properties into work.

2. **Ease of Application** - paint must be easy to apply by the method prescribed by the manufacturer or of the user. Paint must go unto the subtrate in the specified film thickness, and dried in the specified time to the desired appearance and possess the necessary specific properties.

3. **Film Integrity** - the cured or dried film of paint must have all the film properties as claimed by the manufacturer. There should be no weak spots in the film caused by imperfect film drying or curing.

4. **Consistent Quality** - paints must be consistent in quality from can to can, batch by batch, shipment to shipment, color, viscosity, application properties and durability.

5. **Specific properties** should be considered for the particular use. For example:

a) **Kitchen enamel** - must resist grease; heat and repeated cleaning.

b) **Stucco or latex paint** - must resist water, alkalai, sunlight and permit passage of water vapor.

c) **Swimming pool paints** - must have a specific calorine, water and sunlight.

d) Exterior commercial aircraft finishes must resist ultra violet degradation, erosion by air loss of adhesion at high speed, rapid change of temperature, chemical attack by the hydraulic fluids of the aircraft, and film rapture from the flexing of the film by the denting of the surface.

10-2 PAINT FAILURE

The primary cause of paint failure is **"Moisture"** which is considered as a menace to the best of paint jobs. It is too frustrating to see your lovely new painted house deteriorating so soon specially if you have bought good paint, used good tools and spend a lot for it's labor.

The elements of a good painting job are:

1. **Correct surface preparation:** The primary essential property of paint is **Adhesion.** Good adhesion demands proper surface preparation.

2. Choice of the proper paint system. Apply the right paint on the right surface.

3. Good application with the right technique and tools.

a) Uniform wet and dry film thickness

b) Correct number of sequence of application see the manufacturer's specifications.

c) The right tools and their use.

The proper application tools depends upon the flow properties of the paint being applied.

4. Correct drying cycle - The final properties of the dried coating develops during the drying cycle. Unless conditions are correct, correct film properties will never develop.

5. Protection against water - water is the hidden enemy of paint. It is a pervasive element of deterioration and it causes:

a) Rusting and other corrosion
b) Paint peeling
c) Masonry efflorescence and spalling
d) Wood rot
e) Corrosive water solution (staining sea water)

10-3 SURFACE PREPARATION

1. Surface examination - No painting shall be done under conditions which jeopardize the quantity or appearance of the painting or finishing.

Surface Preparation. The quickest way to achieve paint failure is improper surface preparation. It is just as important to qualify a surface preparation contractor and applicator as it is to specify a painting system. The following subsections give a general overview of surface preparation consideration.

General Specifications

Surface examination. No exterior painting or interior finishing shall be done under conditions which jeopardize the quality or appearance of painting or finishing.

Preparation. All surfaces shall be in proper condition to receive the finish. Woodwork shall be hand-sandpapered and dusted clean. All knotholes, pitch pockets, or sappy portions shall be shellacked or sealed with knot-sealer. Nail holes, cracks, or defects shall be carefully puttied after the first coat with putty matching the color of the stain or paint.

Interior woodwork. Finishes shall be sandpapered between coats. Cracks, holes, or imperfections in plaster shall be filled with patching plaster and smoothed off to match adjoining surfaces.

Plaster or masonry. Plaster or masonry shall be dry before any sealer or paint is applied. After the primer-sealer coat is dry, all visible suction spots shall be toughed up before succeeding coats are applied. Work is not to proceed until all such spots have been sealed. In the presence of high alkali conditions, surfaces should be washed to neutralize the alkali.

Metals. Metals shall be clean, dry, and free from mill scale and rust. Remove all grease and oil from surfaces. Wash unprimed galvanized metal with metal etching solution and allow it to dry.

Concrete and brick surfaces. These surfaces shall be wire-brushed clean. Surfaces which are glazed or have traces of patching compound on them shall be sandblasted or acid-etched.

Cleaning Methods

Sandblasting. There are three general methods of sandability.

- **Conventional dry sandblasting.** The sand is not recycled. Dust respirators and other safety precautions are taken. For environmental restrictions on dry blasting are becoming increasingly severe.

- **Vacuum sandblasting.** This method reduces health hazards and recovers the sand. It is more costly and less efficient than dry blasting, but its efficiency can be increased by holding the vacuum cone at a slight distance from the surface. The vacuum method is useful inside shops and in areas where dust might damage machinery.

- **Wet sandblasting.** This method reduce the dust hazard and may be required by legal restrictions. The wet sand and paint residues accumulate on ledges and other flat areas, necessitating a rinsing operation.

Wire-brushing and scraping. Power and hand wire-brushing are used mainly on small jobs, in cleaning small areas after sandblasting, and on surfaces for which sandblasting is not feasible. Hand scraping is used on small areas, in places where access is difficult, and for final clean-up after other methods have been employed.

Power tools. Power tools such as rotary wire and disc tools, rotary impact chippers, and needle sealers may be used if sandblasting is not feasible.

Water blasting. Water blasting is a clean and effective method for the removal of old paint from masonry surfaces that is becoming more widely used. It is generally acceptable for health and environmental requirements. Water blasting is the most efficient method of cleaning large masonry surfaces now in use, and it is often the preferred blast method for underwater or marine work.

Chemical methods

- **Acid-etching.** An acid solution, with or without a detergent, to roughen dense, glazed surfaces. It is important to rinse thouroughly acid- etched surfaces to remove the residual soluble reaction products of calcium and magnesium chloride, which affect the adhesion and stability of latex paints in particular.
- **Paint removers.** Both conventional solvent-based and water rinsable types maybe used to remove old paint. Most paint removers contain some wax, which must be removed completely before painting. Wax inhibits the drying of paints and destroys adhesion.
- **Steam cleaning.** Steam cleaning with or without de-detergents is frequently used in food-packing plants. A Mildewcide is usually added. Low-pressure steam cleaners are available for use on walls in homes and offices.
- **Alkali cleaning.** Alkali cleaners should not be used on masonry surfaces adjacent to aluminum, stainless steel or galvanized metal. A thoroughly clean water rinse is essential, for residual alkali and detergents can cause greater damage if they are not removed completely.

10-4 KINDS OF PAINTS, USES AND AREA COVERAGE

	Use	Thinning	Drying Time	Area Coverage per 4 liters
	PRIMERS			
1. Interior Primer and Sealer	For interior wood surfaces	Paint Thinner	2 hours Allow overnight before recoating	25 to 30 sq. m.
2. Exterior wood Primer	For exterior wood surfaces	Paint Thinner	6 hours Allow overnight before recoating	30 to 40 sq. m.

WATER BASE MASONRY PAINT

1. Acrylic Latex Paint	Exterior and Interior masonry surface	½ lts./4 lts. water	30 minutes Allow 6 hrs. before coating	30 to 40 sq. m.
2. Acrylic Semi-Gloss Latex	Exterior and Interior masonry surface	water	30 minutes Allow 6 hrs. before recoating	30 to 40 sq. m.
3. Acrylic Gloss Latex Paint	For exterior and interior masonry paint	water	30 minutes Allow 6 hrs. before recoating	30 to 40 sq. m.
4. Acrylic Clear Gloss Emulsion Paint	For application on chalky surface to improve adhesion of subsequent coats of latex paint	water	1 hour Allow 6 hours before recoating	30 to 40 sq. m.
5. Latex H-Gloss Enamel	For furniture, cabinets, doors, windows and Trim toys, tools wrought iron, primed metals and appliances	Use as is	1 hour Allow 4 hrs. before recoating	30 to 40 sq. m.
Tinting Colors	Acry-colors	Water		
6. Acrylic Concrete Sealer	Primer for old and new concrete, exterior and interior surface	Water	30 minutes Allow 6 hrs. before recoating	30 to 40 sq. m.
7. Masonry Surface conditions	Primer for old chalky paint film	Use as is	24 hours Allow overnight before recoating	25 to 30 sq. m.

ROOF PAINT

1. All weather acrylic Roof Shield	For galvanized iron sheet, asbestos bricks concrete and stucco	Water	4 hours Allow overnight before recoating	40 to 50 sq. m.
2. Portland Cement Paint	G.I. sheet, concrete CHB, stucco, brick or other zinc coated metal surfaces.	Paint Thinner	6 hours Allow overnight before recoating	30 to 40 sq. m.
3. Davies Roof Paint	Galvanized roofs and other metal such as aluminum and steel	Paint Thinner	6 hours Allow overnight before recoating	30 to 40 sq. m.

VARNISHING

1. No. 48 Davies Wood Bleach 1 and 2	For Dark wood that needs to be changed to light natural finish and making old wood color uniform	Use as is		
2. No. 77 Davies Lax-Tire Plastic Wood Dough	For patching up surface defects on wood surface as wood knots, nail holes, cracks and joints	Use as is	10 minutes 30 minutes for dry hard	20 to 25 sq. m.
3. Wood filler paste	Sealer for open grain of interior wood	Paint Thinner	12 minutes Allow overnight before recoating	25 to 35 Sq. m.
4. Non-Grain Raising wood stain	For wood surfaces		30 minutes	30 to 40 sq. m.
5. Oil Woodstain	For panelling, cabinets, door jambs, floors, furnitures and other woodworks		Allow 24 hours before recoating	30 to 40 sq. m.
6. Finishing Oil	To seal and finish interior wood surfaces such as furnitures wood panelling etc.		Overnight	35 to 40 sq. m.
7. Spar Varnish	For floors, sidings, decks of boats, etc.	Paint Thinner	24 hours	40 to 50 sq. m.
8. Daxpar Varnish	For exterior and interior wood surfaces also for nautical and aeronautical varnish requirements.	Paint Thinner	24 hours	40 to 50 sq. m.
9. Hi-Solid Sanding Sealer	For interior new wood such as furniture and fixture finishes cabinets, doors, shelves, etc.	Lacquer Thinner	10 minutes Allow 30 min. before recoating	40 to 45 sq. m.
10. Hi-Solid clear Gloss Lacquer	For furnitures, cabinets, fixture, door panelling and trim	Lacquer Thinner	Allow 30 minutes before recoating	30 to 40 sq. m.
11. Hi-Solid Semi-Gloss Lacquer	For interior wood such as furnitures cabinets, doors shelves panelling etc.	Lacquer Thinner	Allow 30 minutes before recoating	30 to 40 sq. m.
12. Hi-Solids Dead Flat Lacquer	Interior wood, Furniture, cabinets doors jambs, panelling trim etc.	Lacquer Thinner	Allow 30 minutes before recoating	30 to 40 sq. m.
13. Water White Gloss Lacquer	For furnitures, wood works, cabinets, doors, panels and interior walls	Lacquer Thinner	Allow 30 minutes before recoating	30 to 40 sq. m.

ENAMEL AND GLOSS PAINT

1. Quick Drying Enamel	For exterior and interior wood and metal surface	Paint Thinner	5 hours Allow: 8 hrs. before recoating	30 to 40 sq. m.
2. Interior Semi-Gloss Enamel	For interior wood and metal surface	Paint Thinner	6 hours Allow overnight before recoating	25 to 30 sq. m.
3. Flat Wall Enamel	For interior walls and ceilings	Paint Thinner	3 hours Allow overnight before recoating	40 to 50 sq. m.
4. Exterior Gloss Paint	For exterior wood and properly primed metal surfaces.	Paint Thinner Linseed Oil	6 hours Allow 48 hours before recoating	30 to 35 sq. m.
Tinting Colors	Oil Tinting Color			

AUTOMOTIVE FINISHING

1. Lacquer Enamel	For properly primed metal and wood	Lacquer Thinner	Allow 30 minutes before recoating	40 to 50 sq. m.
2. Automotive Lacquer	For exterior and interior wood or metal surface	Lacquer Thinner	30 minutes	40 to 50 sq. m.
3. Lacquer Primer Surface	For metal and wood surface	Lacquer Thinner	30 minutes	40 to 50 sq. m.
4. Lacquer Putty	For exterior and interior metal and wood surface	Lacquer Thinner	10 minutes dry to sand in 1 hour	20 to 30 sq. m.
5. Pro-Lux Auto Enamel	For automotive finishing also for residential and commercial structure	Paint Thinner	2 hours Dry hard in 10 hours	30 to 40 sq. m.
6. Pro-Lux Enamel Primer	For exterior and interior wood and metal surfaces	Paint Thinner	2 hours Allow 8 hours before recoating	30 to 40 sq. m.
7. Davies Pro-Lux Glazing Putty	For exterior and interior metal and wood surfaces	Use as is	2 hours	25 5o 35 sq. m.

INDUSTRIAL PAINTS

1. Silver Finish Aluminum	For steel tanks, exterior and interior metal wood and masonry	Use as is	1 hour Allow 24 hours before recoating	40 to 50 sq. m.

SIMPLIFIED CONSTRUCTION ESTIMATE

2.	Heat Resisting	For interior and exterior surfaces such as radiators, boilers, pipes stocks and general industrial equipment	Use as is	1 hour Allow 24 hours before recoating	40 to 50 sq. m.
3.	Hi-Heat Resisting Paint	For superheated steam lines, boiler casings, boiler drum and rockets launchers	Use as is	1 hour at temp of 450 F max. 1200 F	40 to 50 sq. m.
4.	Asphalt Base Aluminum	For asbestos cement composition and metal	Use as is	1 hour Allow 24 hours before recoating	20 to 30 sq. m.
5.	Traffic Paint	For asphalt and masonry surfaces	Use as is	1 hour Allow low 24 hrs. before recoating	20 to 30 sq. m.
6.	Blackboard Slating	For wood or metal surfaces	Paint thinner	2 hours Allow overnight before eecoating	35 to 40 sq. m.
7.	Davies-Anti Corrosive Marine Paint	For hulls and below water line of ships	Paint thinner	12 hours Allow overnight before recoating	30 to 40 sq. m.
8.	Marine Bott topping Paint	For properly primed surfaces between the light and deep load lines of ships	Paint thinner	12 hours Allow 24 hours before recoating	30 to 40 sq. m.
9.	Anti-Fouling Paint	For properly primed surfaces below the water line of ships	Paint thinner	8 hours Allow 12 hours before recoating	30 to 40 sq. m.
10.	Hull, Deck, Mast and Topside Paint	For use above the water line of ocean going vessels, equipment and structures near the sea	Paint thinner	12 hours Allow 24 hours before recoating	30 to 40 sq. m.
11.	Machinery Engine Enamel	For marine engine machineries and equipment casings	Paint thinner	1 hour Allow 24 hrs. before recoating	30 to 40 sq. m.
12.	Epoxy Primer	For steel, aluminum galvanized iron	Epoxy Reducer	6 hours Allow overnight before recoating	30 to 40 sq. m.

13. Epoxy Enamel	For steel, aluminum, galvanized iron, wood and concrete	Epoxy Reducer	6 hours Allow overnight before recoating	30 to 40 sq. m.
14. Epoxy Glazing Putty	Body repair on aircraft, automotive, equipments	Epoxy Reducer	2 hours	
15. Epoxy Glue	Multipurpose thermo setting plastic materials for cementing or bonding rigid materials	Use as is	8 hours Full strength in 96 hours	30 to 40 sq. m.
16. Pure Pale Boiled Linseed Oil	Use as thinner for exterior house paint	Use as is		
17. Concrete Neutralizer	Treatment to neutralize masonry surfaces	Use as is	24 hours	30 to 40 sq. m.
18. Rust Converter	For inhibiting corrosion	Use as is	overnight	25 to 35 sq. m.
19. Paint Remover	Paint Stripper	Use as is	overnight	25 to 35 sq. m.
20. Mildewcide Solution	Destroy molds and mildews on new and previously painted surfaces	Water		

PRIMERS

1. Preperakote Red Oxide Primer	Primer for ferrous and non ferrous metals	Paint Thinner	3 hours	35 to 45 sq. m.
2. Zinc Chromate Primer	For exterior and interior metal surfaces exposed to normal industrial environment	Paint Thinner	3 hours	30 to 40 sq. m.
3. Red Lead Primer	Rust preventive primer for ferrous surfaces	Paint Thinner	3 hours	30 to 40 sq. m.

SOURCE: DAVIES PAINT Manual of Information

The area coverage of paint per 4 liters can as specified by the manufacturer depends upon the porosity of the surface. Surface porosity could be classified into three categories:

1. Fine surface
2. Semi Rough surface
3. Rough surface

Generally, the average area coverage per can of 4 liters paint ranges from 30 to 40 square meters depending upon the condition of the surface to receive paint. Under such condition the first thing to be considered by the estimator is to examine the surface to be painted. Is it concrete, wood, metal etc.

Verify this condition of the surface and know under what category does it fall, only then is the time to select the right kind of paint for the right surface.

There are instances wherein due to financial constraint, the owner requires his painter to expand the coverage of the paint contrary to the label specifications and the effects are:

1. Over thinning reduces the viscosity of the paint

2. The required film of dried paint could not be attained

3. The quality and durability of the paint is sacrificed.

10-5 ESTIMATING YOUR PAINT

While we agree on the manufacturers' estimate of area covering per 4 liters can of their paint, the promotional aspect of their products could not be discounted. Likewise, the company estimate might have overlooked the following factors that affects the area covering of paint.

1. The kind of tools used in the painting work such as brush, roller or spray has its own performance and efficiency relative to the spreading of paint on various surface condition. Definitely, the spreading capability of the tools will not be the same.

2. Any of the tools used for painting application has its factor of waste for washing and cleaning including the remains in the can or container. When calsomine powder is used for putty as a common practice paint is the main base for mixing which simply mean reduction in the area covering.

In order to be safe in the estimate of the paint requirements, adopt the manufacturers' specifications and their estimate as to the area coverage per 4 liters can with a reservation of 10% allowance factor.

Illustration 10-1

A concrete fire wall of a building measures 30 meters long and 12 meters high. Find the number of 4 liters can latex paint required if the wall is:

1. Wooden Trovelled finish (Rough Surface)
2. Paper finished (semi-rough surface)

Solution:

A. Wooden Trovelled Finished

1. Solve for the wall area

$A = 30 \times 12$ m.
$A = 360$ sq. m.

2. Solve for the concrete neutralizer

$$\frac{360}{30} = 12 \text{ gallons water}$$

Where 30 sq. m. area coverage per gallon of water.

If one pint of neutralizer is mixed to 2½ gallons of water.

Divide:

$$\frac{12}{2.5} = 4.8 \text{ say 5 pints concrete neutralizer}$$

3. Solve for acrylic latex paint @ 30 sq. m./4 liters

$$\frac{360 \text{ sq. m.}}{30 \text{ sq. m.}} = 12 \text{ cans}$$

For Second Coat x 2

24 can @ 4 liters
Add 10% 2.4
Order = 26.4 say 27 cans @ 4 lts.

B. Paper-Finished Wall

1. Area $= \frac{360 \text{ sq. m.}}{35 \text{ sq. m.}} = 10.28$ cans @ 4 liters

Where: 35 sq. m. = area coverage per 4 liters

2. Second Coat multiply by 2

$$10.28 \times 2 = 20.56$$

3. Add 10% allowance = 2.0

Total = 22.56 cans @ 4 liters

Order: 23 cans @ 4 liters

Illustration 10-2

A 10 class room two storey building has a T & G lumber flooring resting on a 50 mm x 200 mm (2" x 8") dressed floor joist without a ceiling. The president of the school requires the bill of materials for the painting of the joists and the T & G underflooring.

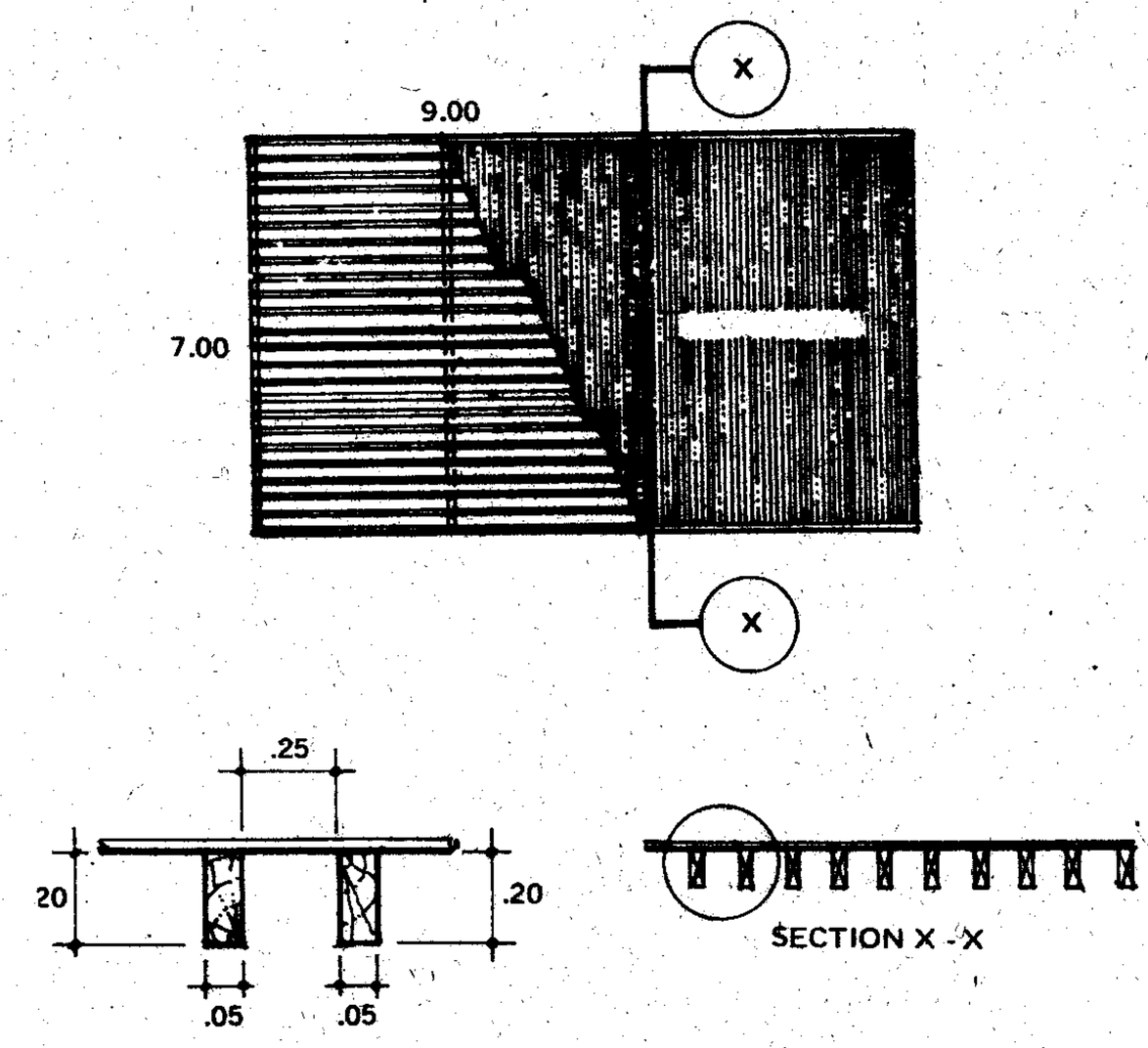

FIGURE 10-1

Solution

1. After inspection, the recommendation is to use flat wall enamel paint.

2. Solve for the area of one classroom ceiling

   a) Area of the T & G surface
   23 strips x .25 m. x 9.00 m. = 51.76 sq. m.

   b) Area of the floor joist
   surfaces = .45 m.
   23 pcs. x .45 x 9.00 m. = 93.15 sq. m.

   144.91 sq. m.

   say 145 sq. m. per classroom

3. Multiply by 10 rooms:

   145 sq. m. x 10 = 1,450 sq. m.

4. Divide by the area coverage of Flat wall enamel paint

   $\frac{1,450}{40}$ = 36.25 cans @ 4 liters

5. For Second Coat:

   36.25 x 2 = 72.5
   Add 10% = 7.25
   79.75 say 80

6. Solve for the paint thinner

   The manufacturer specify ½ lts. per 4 liters of paint

Therefore:

80 cans x ½ lts./can = 40 lts.

Add 10% = 4 liters

Order: 44 liters 4 cans @ 4 lts.

Comments:

1. The allowance order for paint thinner is necessary because this is the most abused material in almost all painting jobs. Likewise, lacquer thinner allowance should be increased up to 15% for thinning of lacquer paints, multiple rubbing in varnishing job and cleaning of tools including its rapid evaporation.

2. In estimating paints for walls, subtract the window opening if its area is more than 5% of the wall area. On the otherhand, door openings are usually not subtracted in the computation of the wall area.

3. In ordering paint for your house or any structure, we don't just order paint, we have to specify what kind of paint as there are so many kinds of paint with specific purpose and warranty if properly applied on the right medium of surfaces. (See Table 10-1)

4. For best result of your painting job always specify good quality premium paint. The durability and appearance of good paint will compensate the initial cost and those who have tried it did never regret.

10-6 PAINT FAILURE AND REMEDY

Types of paint failure

1. **Blistering or Peeling** - occurs when the moisture trapped in the siding evaporates from the wood when exposed to sun pushes the paint out the surface.

   Remedy: 1. Find and eliminate the sources of moisture.
   2. Scrap off old paint around the blistered area, let dry, apply good primer then final paint of good quality.

2. **Chalking** - means that your paint was too thin without the required paint film.

   Remedy: Be more generous to your paint, spend a little for two coatings.

3. **Flaking** - the result of inadequate or poor surface preparation. The paint flakes off in "scales" or powders" or powders and chalk off.

   Remedy: Removed the paint on affected area by wire brush. Seal all cracks against moisture, by concrete neutralizer then apply final coat of latex paint.

4. **Cracking and Alligatoring** - Means that paint was applied in several heavy coats not observing the sufficent drying time between coats. The owner or the contractor might have been so in a hurry to finish the job. Another cause is when the undercoat was not compatible with the finish coat. Example: for ignorance, using a quick buying enamel as final coat over a flat wall paint.

Remedy: Removed the paint, clean the surface apply good primer then final coat.

5. **Checking and Flaking** - caused by expansion or contraction of wood.

   Remedy: See Blistering.

6. **Peeling or Cracking of Paint on Galvanized Sheet** - Indicates the use of improper metal primer or no primer at all. The paint film has no adhesion.

   Remedy: Strip off all loose paint clean with solvent dry then apply galvanized paint.

7. **Fading** - is normal but if fading is fast and excessive that means you used poor kind of paint.

   Remedy: Repaint. Be sure to buy the best brand of paint for it contains more and better pigment than the cheaper one.

8. **Bleeding** - It is caused by inadequate sealing at the first paint application.

   Remedy: Scrape off the wood surfaces then repaint.

9. **Mildew** - thrives on a high humidity and temperature. The fungus are stimulated and grows on the paint film. If covered by new paint, just the same it will grow through the new coat of paint.

   Remedy: Wash the surface with midwash solution diluted with water. Scrub the surface. Rinse with clean water, allow 48 hours to dry then apply final paint.

10. **Staining** - caused by wood preservatives of rust of nails.

    Remedy: Remove paint on affected area. Remove rust on nails apply lead primer to metal and wood primer then final coat with quality house paint.

10-7 WALL PAPERING

The term **"wallpaper"** refers not only to paper substances that are pasted on walls and ceiling but also includes vinyl, cork, fabrics, grass cloth, foils and many other surface covering materials which are available in the market.

In estimating your wall paper always provide extra rolls in anticipation of the following:

1. Replacement of ruined or damaged material in handling or working.

2. Additional area which are not included in the original plan.

3. For future repair which might be so necessary that needs the original batch for color and design matching.

4. The size of the wall paper to cover the surface depends not only on the area of the surface but also on the wall paper pattern.

5. Trim can be used as a decorative boarder and it is sold by the yard or meter.

Vinyl wallpaper has three kinds, they are:

1. Vinyl laminated to paper
2. Vinyl laminated to cloth
3. Vinyl impregnated cloth on paper backing, which is extremely durable, easy to clean and resistance to damage.

Caution in buying vinyl wallpaper:

Examine the label if it is **vinyl coated only.** These are not wear resistant, grease resistant, or washable. Never confuse them with vinyl wallpaper.

In hanging your vinyl wallpaper always use and specify **vinyl mildew resistant adhesive only.**

Vinyl wallpaper stretches if pulled, hairline cracks will appear at seams as wallpaper shrinks when it dries, hence, avoid stretching your vinyl wallpaper.

Foils is another wallpaper simulated metallic finish or aluminum laminated to paper. Do not fold or wrinkle the foil, there is no remedy to creases. Smooth surface is required to avoid reflective surfaces as foil magnify any imperfections on the surface to which it is attached. Use mildew-resistant vinyl adhesive only.

Grass cloth, Hemp, Burlap, Cork are mounted on a paper backing which could be weakend from oversoaking with paste. Paste one strip at a time.

Flocks is made of nylon or rayon available on paper, vinyl or foil wallpapers. Use paint roller or squeegee for best result.

TABLE 10-1 WALL PAPER TECHNICAL DATA

WIDTH	LENGTH/ROLL	EFFECTIVE COVERING/ROLL	ADHESIVE BOX per ROLL
.52 m.	10.05 m.	5.22 sq. m.	.17
.54 m	10.05 m.	5.42 sq. m.	.18
.71 m.	13.70 m.	9.72 sq. m.	.32

Estimating procedure:

1. Determine the area of the surface to receive wall paper.
2. Subtract the area opening such as doors, windows, etc.
3. Divide the net wall area by the effective covering of the wallpaper size as selected from Table 10-1 to get the number of roll.
4. Add 5 to 10% allowance depending upon the design pattern.
5. Multiply the number of rolls by the corresponding value of adhesive, the result is the number of box as required.

chapter 11

AUXILIARY TOPICS

11-1 ACCORDION DOOR COVER

The following are the materials required for every meter run of an accordion door cover 2.40 mts. high.

12 pcs.	.15 x 2.40 m. G. I. Blade
15 pcs.	6 mm ø x 2.40 m. Pin
14 pcs.	5 mm x 25 mm x 2.40 m. Flat Bars
24 pcs.	3 mm x 12 mm x .60 m. Flat Bars
35 pcs.	6 mm ø x 38 mm Rivets
21 pcs.	6 mm ø Hole x 19 mm Washers
52 pcs.	6 mm ø x 16 mm Rivets
2 pcs.	38 mm ø Bearing with Rivert & Bushing
2 pcs.	9 mm x 32 mm x 2.00 m. Flat Bars

To find the required material for a given door opening, multiply each item by the span of the door opening in meters.

Illustration 11-1

A 4.00 m. wide doors requires an accordion cover for security purposes. The accordion door is to be opened at the center folded at both sides direction. List down the materials.

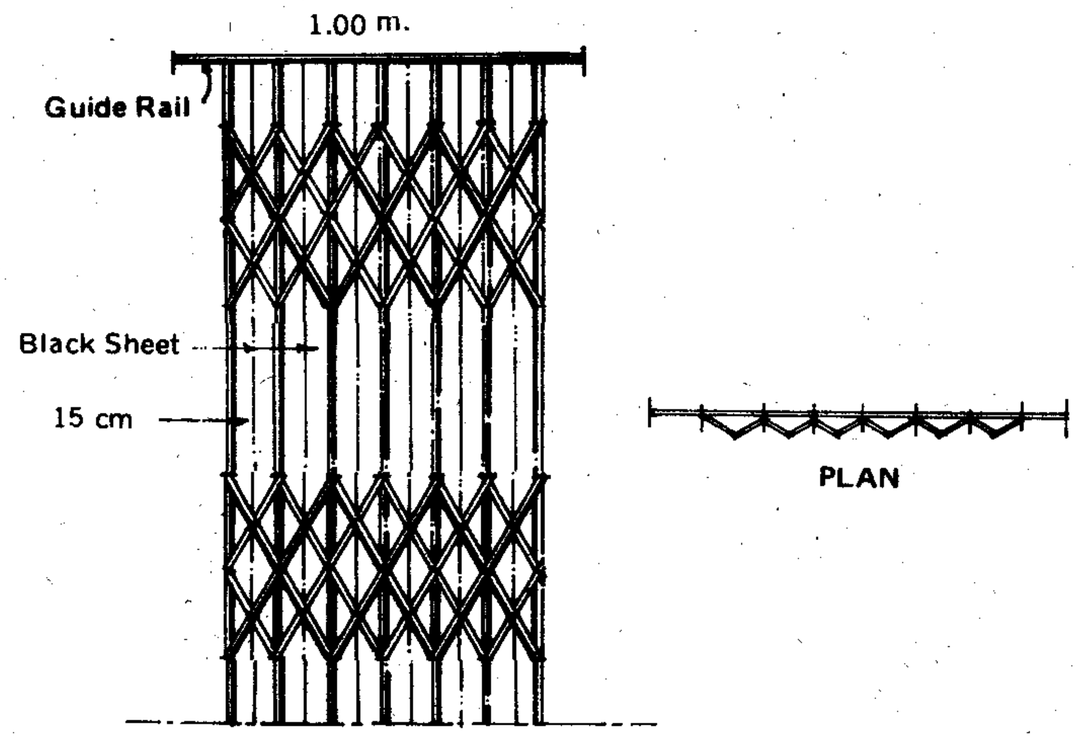

FIGURE 11-1

Solution

Span of door = 4 meters

Multiply:

4.00 x 12	=	48 pcs.	.15 x 2.40 m. G.I. Blade
4.00 x 15	=	60 pcs.	6 mm ϕ x 2.40 m. Pin
4.00 x 14	=	56 pcs.	5 mm x 25 mm x 2.40 m. Flat Bars
4.00 x 24	=	96 pcs.	3 mm x 12 mm x .60 m. Flat Bars
4.00 x 35	=	140 pcs.	6 mm ϕ x 38 mm Rivets
4.00 x 21	=	84 pcs.	6 mm ϕ Hole x 19 mm Washers
4.00 x 52	=	208 pcs.	6 mm ϕ 16 mm Rivets
4.00 x 2	=	8 pcs.	38 mm ϕ Bearing with Rivets & Bushing
4.00 x 2	=	8 pcs.	9 mm x 3 mm x 2.00 m. Flat Bars

11-2 PILES

Piles shall be peeled removing all the rough bark at least 80% of the inner bark. Not less than 80% of the surface on any circumference shall be clean wood. No string of inner bark remaining on pile shall be over 2 cm. wide and 20 cm. long. All knots shall be trimmed closed to the body of the pile.

TABLE 11-1 WOOD PILES

LENGTH OF PILE	DIAMETER IN. FROM BUTT Min. Cm.	Max. Cm.	MIN. TIP Diam. Cm.
Under 12 meters	30	45	20
12 m. to 18 m.	32	45	18
Over 18 meters	35	50	15

The diameter of piles shall be measured in their peeled condition. When the pile is not exactly round, the average of 3 measurements may be used. The butt diameter for the same length of pile shall be as uniform as possible. All piles shall retain preservative of at least the amount given in the following table:

TABLE 11-2 MINIMUM PRESERVATION PER CUBIC METER OF WOOD

USE AND TYPE	TYPE OF PROCESSING EMPTY CELL PROCESS	FULL CELL PROCESS
General Use	193 kg.	321 kg.
Marine Use	193 kg.	321 kg.

Lumber shall be treated by pressure method with creosoted coal solution or creosote petroleum solution.

TABLE 11-3 RANGE OF SKIN FRICTION FOR VARIOUS SOIL

	VALUE IN KG./SQ. M. MINIMUM	MAXIMUM
1. Silt and Soft Mud	244	489
2. Silt, compacted	587	1,712
3. Clay and Sand	1,956	3,913
4. Sand with some clay	2,446	4,891
5. Sand and Gravel	2,935	8,804

TABLE 11-4 ALLOWANCE BEARING POWER OF DIFFERENT SOILS

KIND OF SOIL	VALUE IN SHORT TON/SQ. M. Min.	Max.	Usual
1. Quick Sand and Alluvial soil	5.38	10.76	5.38
2. Clay (Soft)	8.07	32.28	21.50
3. Wet Clay and soft sand	10.76	21.50	16.14
4. Clay and Sand in alternate layers	10.76	43.04	21.50
5. Firm and Dry loam or clay, hard dry clay or fine sand	21.50	43.04	32.28
6. Sand, confined	10.76	43.04	32.28
7. Compact Coarse Sand or Stiff Gravel	32.28	64.56	43.04
8. Sand and Gravel Well Cemented	53.80	107.60	86.08
9. Good Hard Pan or Hard Shale	53.80	107.60	86.08
10. Rock	53.80	269.00	161.40

11-3 BITUMINOUS SURFACE TREATMENT

Hot Asphalt Type - Approx. ½ or 1.25 cm. thick.

TABLE 11-5 BITUMINOUS MACADAM WEARING COURSE

	BITUMINOUS MATERIALS L. Sq. M.	AGGREGATE COARSE KEY Kilos Per Sq. M
First Spreading		90
First Application	4.0	
Second Spreading		13
Second Application	1.8	
Third Spreading		11
Third Application	1.4	
Fourth Spreading		8
TOTAL	7.2	122

TABLE 11-6 BITUMINOUS MACADAM PAVEMENT

(Hot Asphalt Type Approx. 2¼ or 5.7 cm. Thick)

	BITUMINOUS MATERIALS L. Sq. M.	AGGREGATE COARSE KILOS	CHOKER KEY L per Sq. M.
First Spreading		90	
Second Spreading			10
First Application	5.5		
Third Spreading			10
Second Application	3.5		
Fourth Spreading			8
Third Application	2.0		
Fifth Spreading			8
TOTAL	11.0	126	

Open Graded Plan Mix Surface Course

The approximate amount of materials per square meter of the open graded plant mix surfacing course and the sequence of placing shall be as follows:

Plant - mixed aggregate	-	80 kilos
Choker aggregate	-	3 kilos
Bituminous Materials	-	.45 liters
Choker aggregate	-	3 to 5 kilos

The weight above are those of aggregate having a bulk specified gravity of 2.65.

TABLE 11-7 BITUMINOUS SURFACE TREATMENT

(Hot Asphalt Type-Approx. 5/8" or 1.6 cm. Thick)

Sequence of Placing Operations and Approx. Amount of Materials per Sq. M.

OPERATIONS	BITUMINOUS MATERIALS L per Sq. M.	AGGREGATE COARSE KILOS	AGGREGATE CHOKER Per Sq. M.
First Application	1.0		
Spreading		22	
Second Application	1.3		
Spreading			6.5
Third Application	0.7		
Spreading			4.5
TOTAL	3.0	33	

* Value given with bulk specific gravity of 2.65.

11-4 HOUSE OF WATER TANK

If the height of a building requires water pressure in excess of that in the city main, house tank is necessary. To provide sufficient pressure, the bottom of the tank must be elevated 20 ft. above the highest fixture.

Tanks may be constructed of either wood, steel or concrete. The required capacity of a tank varies with the capacity and running time of the house or fill pump.

TABLE 11-8 WATER CONSUMPTION IN OFFICE BUILDING

BUILDING TYPE	CONSUMPTION GAL./HOUR/PERSON
Commercial, no airconditioning	3.8
Commercial, with airconditioning	7.3 - 9.2
Owner occupied with kitchen and laundry, no airconditioning	7.3
Other occupied with kitchen, laundry and with airconditioning	9.0

Example:

A commercial office building has an occupancy of 800 persons.

800 x 3.8	= 3,040 gallons per hour
Tanks should have:	1,520 gal. per ½ hour supply
Pump should have:	3,040 gal. per hour; or
	506.6 gal. per minute .

TABLE 11-9 COLD WATER CONSUMPTION

TYPE OF BUILDING	GALLONS/PERSON/DAY
Residence Average	50
Residence Large	100
Apartment Low-rent	75
Apartment High-rent	100
Hotels	100
Office Building	25

Assume that a commercial office building water consumption is 3,040 gallons. Find the size of the proposed water tank or the volume in cubic meters to contain 3,040 gallons.

1 cu. m. = 264.2 gallons

$\frac{3{,}040 \text{ gal.}}{264.2}$ = 11.5 cu. m. or 12 cu. m.

Note: This volume is inside dimension of the tank.

Hot Water

1. Determine the daily consumption of cold water, multiply the building occupants by the number of gallons as listed in Table 11-10.

2. Hot Water: Divide the result of 1 by No. 3

3. Probable hourly demand for hot water, divide the daily total consumption from 2 by 10.

4. Average hourly demand for hot water, divide the daily consumption of hot water in 2 by 24.

TABLE 11-10 HOT WATER CONSUMPTION IN APARTMENT BUILDING

	PUBLIC HOUSING GALLON	APT. HOTEL GALLONS
Average Daily:		
per Apartment	79	50
per Person	28	41
per Room	22	36
Maximum Daily:		
per Apartment	92	69
per Person	33	48
per Room	26	43
Maximum Hourly:		
per Apartment	8.9	7.6
per Person	3.2	5.3
per Room	2.5	4.9

Note: Allow .4 gal per hour per person of hot water in office building and 1.0 per hour per meal.

11-5 FILLING MATERIALS

Estimating Procedure

1. Compute for the volume to be filled up

   l x w x h

2. Determine the kind of filling materials as shown on Table 11-11.

3. Multiply the result found in step one by the corresponding percentage of additional volume Table 11-11.

4. Add this result to that in Step 1 to obtain the compact volume desired.

TABLE 11-11 FILLING MATERIALS

MATERIALS (LOOSE VOLUME)	PERCENTAGE ADDITIONAL TO OBTAIN COMPACT VOLUME
Earthfill	23%
Earth and Sand	18%
Selected Borrow	15%

Example:

A subdivision lot as shown in Figure 11-2 requires filling. Compute the earthfill materials required.

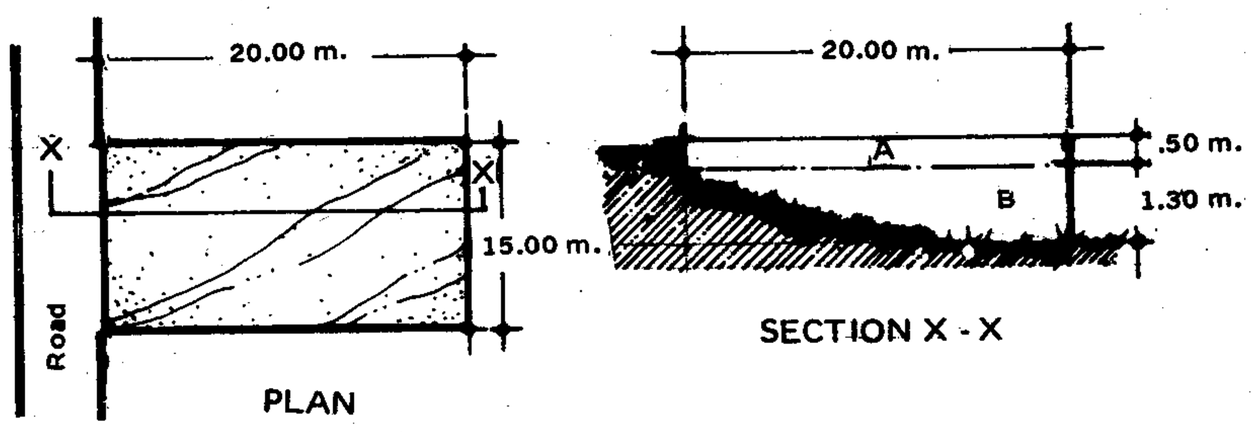

FIGURE 11-2

Solution:

1. Find the volume of A

   15.00 x 20.00 x .50 = 150 cu. m.

2. Find the volume of B

   15.00 x 20.00 x .65 = 195 cu. m.

   Total volume = 345 cu. m.

3. From Table 11-11 + 23%

   345 x 23% = 79.35

   Volume required = 424.35 cu. m.

11-6 GLASS JALOUSIE

TABLE 11-12 GLASS JALOUSIE STANDARD HEIGHT

No. of Blades	Ht. of Glass	Square Foot Per Blade	No. of Blades	Ht. of Glass
4	14 7/8"	4 x 22 = 0.61	13	45 3/8"
5	18 3/8"	4 x 24 = 0.67	14	49 7/8"
6	21 7/8"	4 x 26 = 0.72	15	53 3/8"
7	25 3/8"	4 x 28 = 0.78	16	56 7/8"
8	28 7/8"	4 x 30 = 0.83	17	60 3/8"
9	32 3/8"	4 x 32 = 0.89	18	63 7/8"
10	35 7/8"	4 x 34 = 0.94	19	67 3/8"
11	39 3/8"	4 x 36 = 1.00	20	70 7/8"
12	42 7/8"	4 x 38 = 1.06	21	74 3/8"
		4 x 40 = 1.11	22	77 7/8"
		4 x 42 = 1.17		
		4 x 44 = 1.22		
		4 x 46 = 1.28		
		4 x 48 = 1.33		

11-7 NIPA SHINGLE ROOFING

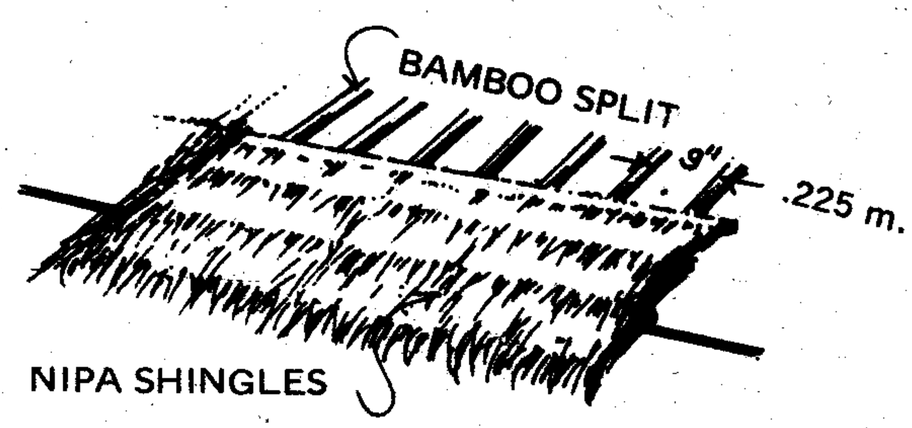

FIGURE 11-3

Nipa shingle is a native local product commonly used as roofing materials in our country prior to the introduction of G.I. sheet and other roofing materials. The nipa palm usually grows on swampy areas and this are the source of the raw materials for making nipa shingles. One nipa stalk contains approximately 174 to 180 nipa leaves. The nipa shingle is classified into two, they are Class "A" having a length of 56 inches and Class "B" measuring 48 inches long, the former contains approximately 82 nipa leaves while the latter has approximately 68 pieces.

TABLE 11-13 NIPA SHINGLE TECHNICAL DATA

End lap in	Effective coverage in sq. mts.		Pieces per sq. m.		Rattan pcs. per sq. m.	
	Class A	Class B	A	B	*	**
4"	.1300	.1090	7.70	9.18	1.8	3.6
3"	.0975	.0818	10.27	12.23	2.0	4.0
2"	.0650	.0545	15.38	18.31	2.8	5.6
1"	.0325	.0273	30.77	36.62	4.0	8.0

* Rattan ties for every other bamboo split ribs.
** Rattan ties for every bamboo split ribs.

Reminder:

Slope area should be considered in solving for the number of pieces required and that the slope of the rafters should not be less than 30 degrees for roof durability.

Illustration 11-2

The area of the roof framing is 30 sq. m. having a general dimension of 3.00 by 10.00 meters. Find the number of nipa shingle required adopting 3 inches end lapping tied on the bamboo split ribs at every other intervals using Class "A" nipa shingle.

Solution:

1. Determine the area of the roof framing.
2. Multiply the area by the number on Table 11-13 corresponding the data as specified in the problem.
3. Convert the result in bundles.
4. Solve for the required rattan and bamboo split by the aid of Table 11-13

$$30 \times 10.27 = 308 \text{ pcs.}$$

$$\frac{308}{25} = 12.3 \text{ say } 13 \text{ bundles}$$

Rattan Split:

$$30 \times 2 \text{ pcs./sq. m.} = 60 \text{ pcs.}$$

Bamboo Split

Bamboo poles are also classified into three. They are: Class "A", Class "B" and Class "C", which are then divided into splits approximately 1¾" to 2" nailed on the purlins at an in-

tervals of 25 cm. apart. Care should be taken into consideration in nailing the bamboo splits to avoid cracks or separation of the grains for it will affect its strength. Fresh or dried bamboo is brittle that nailing will cause damage to most of the splits. The fresh bamboo should be sundried for a day then nailing should be done immediately the following day to avoid cracks or separation of the grains.

TABLE 11-14 BAMBOO POLES DIVIDED INTO SPLIT OF 45 mm to 60 mm (1 ¾" to 2")

CLASS	NO. OF SPLIT	APPROX. LENGTH in meters	COVERAGE in sq. meters
A	8	9.00	12
B	6	7.50	9
C	4	6.00	4

Solving the above problem using Class "B" poles

$$\frac{30 \text{ sq. m.}}{9} = 3.3 \text{ say 4 pcs.}$$

or:

$$\frac{30 \text{ sq. m.}}{12} = 2.5 \text{ say 3 pcs. Class A}$$

11-8 ANAHAW ROOFING

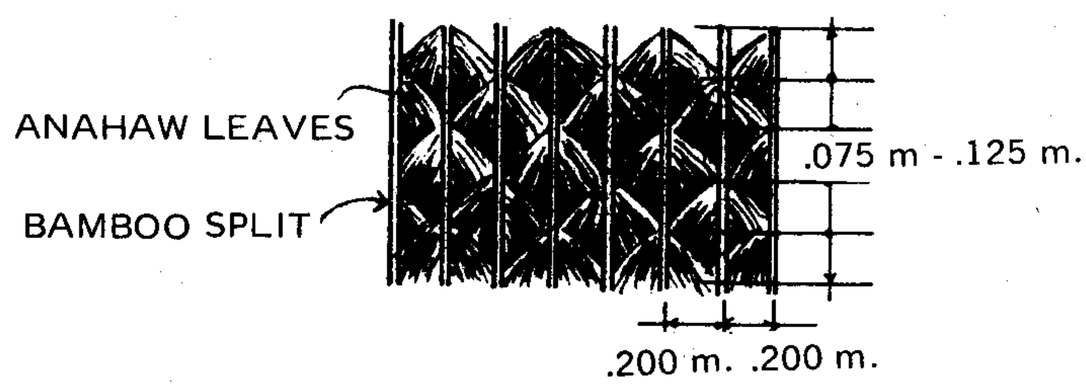

FIGURE 11-4

TABLE 11-15 TECHNICAL DATA

End Lapping	No./Sq. M.	No. of 10' Rattan/Sq. M.
3"	84	7 pcs.
4"	60	6 pcs.
5"	50	5 pcs.

Note:

Add 10 pcs. Anahaw leaves for every linear meter for gutter and 20 pcs. for ridge and hip line. Add 10% allowance for damaged anahaw leaf.

Illustration 11-3

From Figure 11-5, find the number of anahaw leaves and rattan splits required.

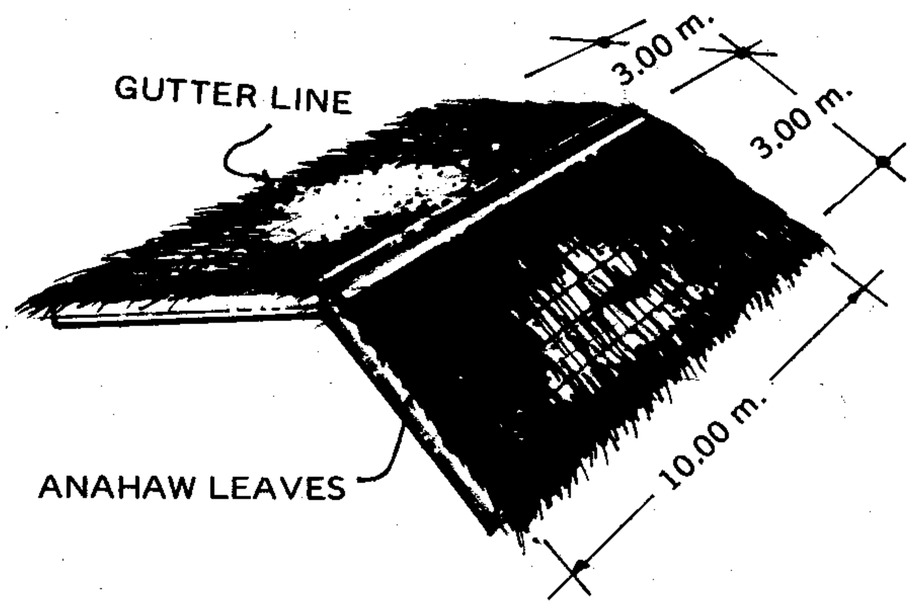

FIGURE.11-5

Solution

Area A	=	30 sq. m.		
Area B	=	30 sq. m.	=	60 sq. m.

Adopting 4" end lapping:

		60 x 84	=	5,040 pcs.

Ridge line:

		10 m. x 20	=	200 pcs.

Gutter line:

		10 x 10	=	100 pcs.
Total			=	5,340 pcs.

Rattan:

		60 x 6	=	360 pcs.

10-9 CONSTRUCTION TERMS

ENGLISH - PILIPINO EQUIVALENTS

1. POST	halige, poste
2. GIRDER	guililan
3. JOIST	suleras
4. FLOORING	sahig, suelo
5. GIRT	sepo
6. BEAM	biga
7. BOTTOM CHORD	barakilan
8. TRUSS	kilo
9. TOP CHORD	tahilan
10. PURLIN	reostra
11. FASCIA BOARD	senepa
12. CEILING JOIST	kostilyahe
13. SIDING (external)	tabike
14. STUD (vertical)	pilarete
15. STUD (horizontal)	pabalagbag
16. WINDOW SILL	pasamano
17. WINDOW HEAD	sumbrero
18. WINDOW or DOOR JAMB	hamba
19. COLLAR PLATE	sinturon
20. STRINGER (open)	hardinera
21. STRINGER (closed	madre (de escalera)
22. TREAD	baytang
23. RISER	takip (silipan)
24. HANDRAIL	gabay
25. MOULDING	muldura
26. EAVE	sibe
27. PROJECTION	bolada
28. FRAMEWORK	balangkas
29. GUTTER	kanal
30. CONDUCTOR	alulod

31. W.I. STRAP	planchuela
32. BOLT	pierno
33. SCAFFOLDING	plancha
34. STAKE	estaka
35. PLASTERED COURSE	kusturada
36. STUCCO or PLASTER	palitada
37. SCRATCH COAT	rebocada
38. PICKWORK (on masonry)	piketa
39. VARNISH FINISH	monyeka
40. SPACING or GAP	biento
41. CONCRETE SLAB (rough)	larga masa
42. ALIGNMENT	asintada
43. PLUMB LINE	hulog
44. CEMENT TILE	baldosa
45. CEMENT BRICK	ladrilyo
46. DOOR FILLET	batidora
47. GROOVE	kanal
48. GOOD GRAIN	haspe
49. PATTERN or SCHEDULE	plantilya
50. HINGE	bisagra
51. PANELLED DOOR	de bandeha
52. EARTHFILL	escombro
53. MASONRY FILL	lastilyas
54. ADOBE ANCHOR	liyabe
55. SOLDER	hinang
56. NICOLITE BAR	estanyo
57. TEMPER (metal work)	suban, subuhan
58. DIAGONAL BRACE	pie de gallo
59. NAIL SETTER	punsol
60. WIRING KNOB	poleya
61. CABINET HINGE	espolon

MENSURATION FORMULAS

Triangle - - -	Area	=	½ base x altitude
Parallelogram - -	Area	=	base x altitude
Trapezoid - -	Area	=	½ sum of parallel side times altitude
Circle - - - -	Area	=	0.7854 x diameter^2
		=	3.1416 x radius ^{2}
	Circumference	=	3.1416 x diameter
		=	6.2832 x radius
Ellipse - - - -	Area	=	0.7854 x short diameter times long diameter
Cone - - - -	Surface (curved only)	=	½ slant height x circumference of base
	Volume	=	1/3 area of base x ht.
Cylinder - - - -	Surface	=	length x circumference plus area of ends
	Volume	=	0.7854 x length x (dia.)^2
Sphere - - - -	Surface	=	3.1416 x (diameter)^2
		=	Circumference x diameter
	Volume	=	0.5236 x (diameter)^3
		=	1/6 circumference x (dia.)^2
		=	2/3 volume of circumscribing cylinder