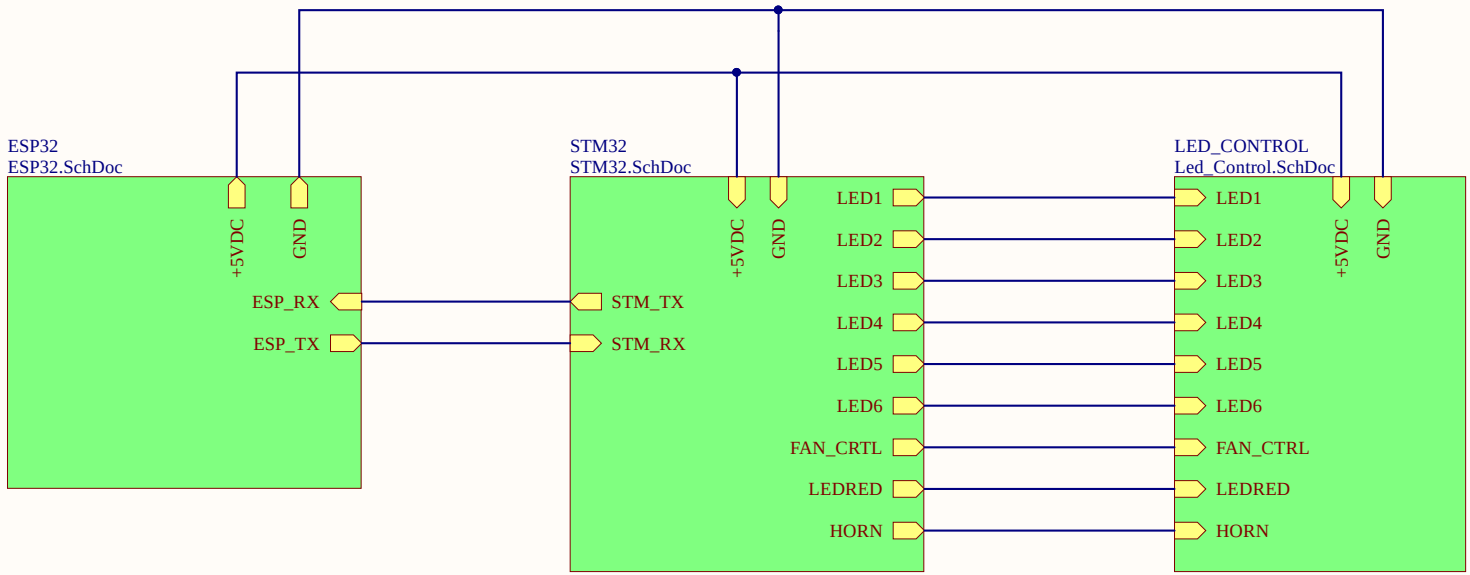

Title		
Size A	Number	Revision
Date: 05/11/2023		Sheet of
File: F:\Long\..\Diagram.SchDoc		Drawn By:

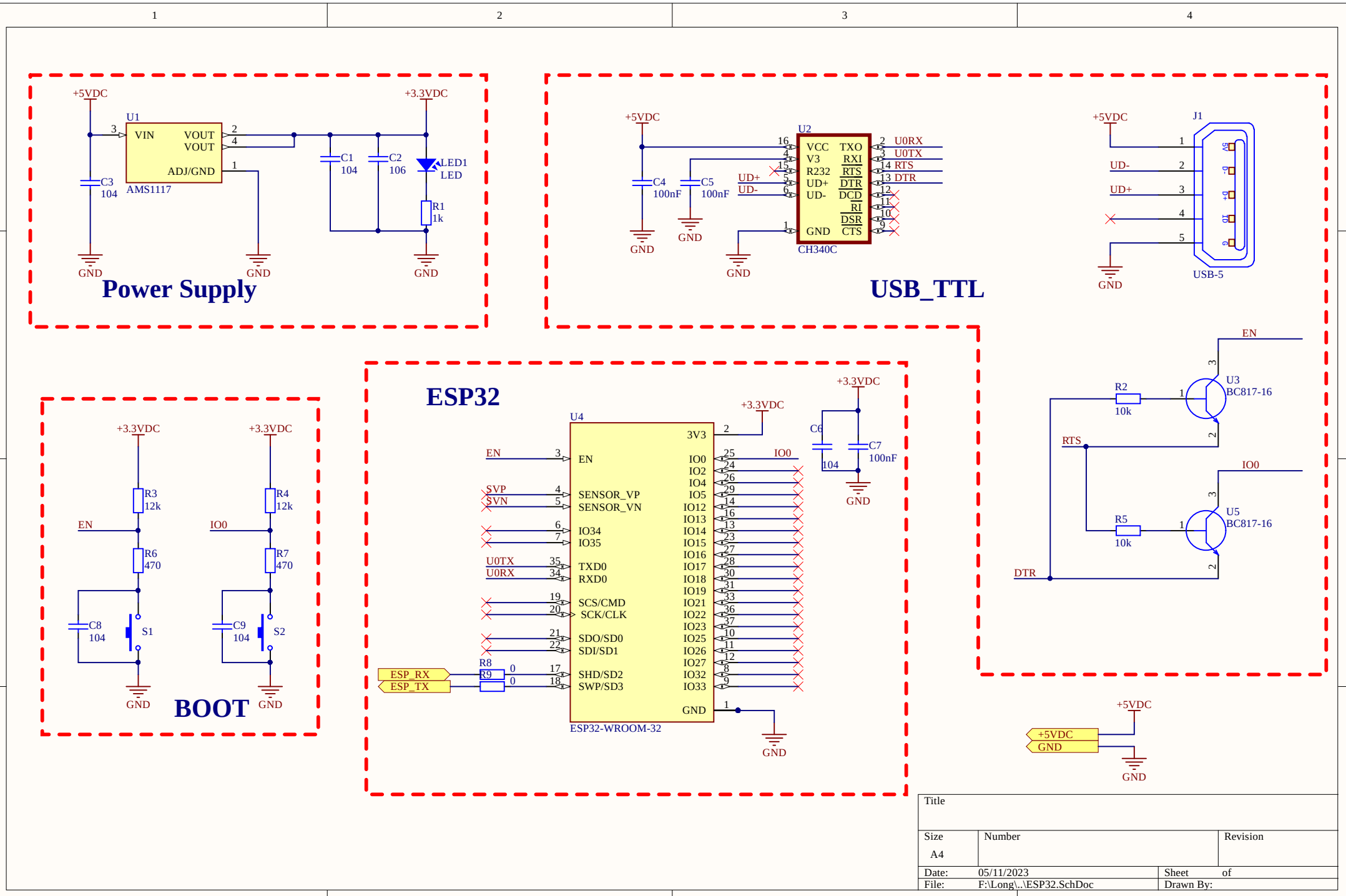

Title		
Size A4	Number	Revision
Date: 05/11/2023	Sheet of	
File: F:\Long\..\ESP32.SchDoc	Drawn By:	

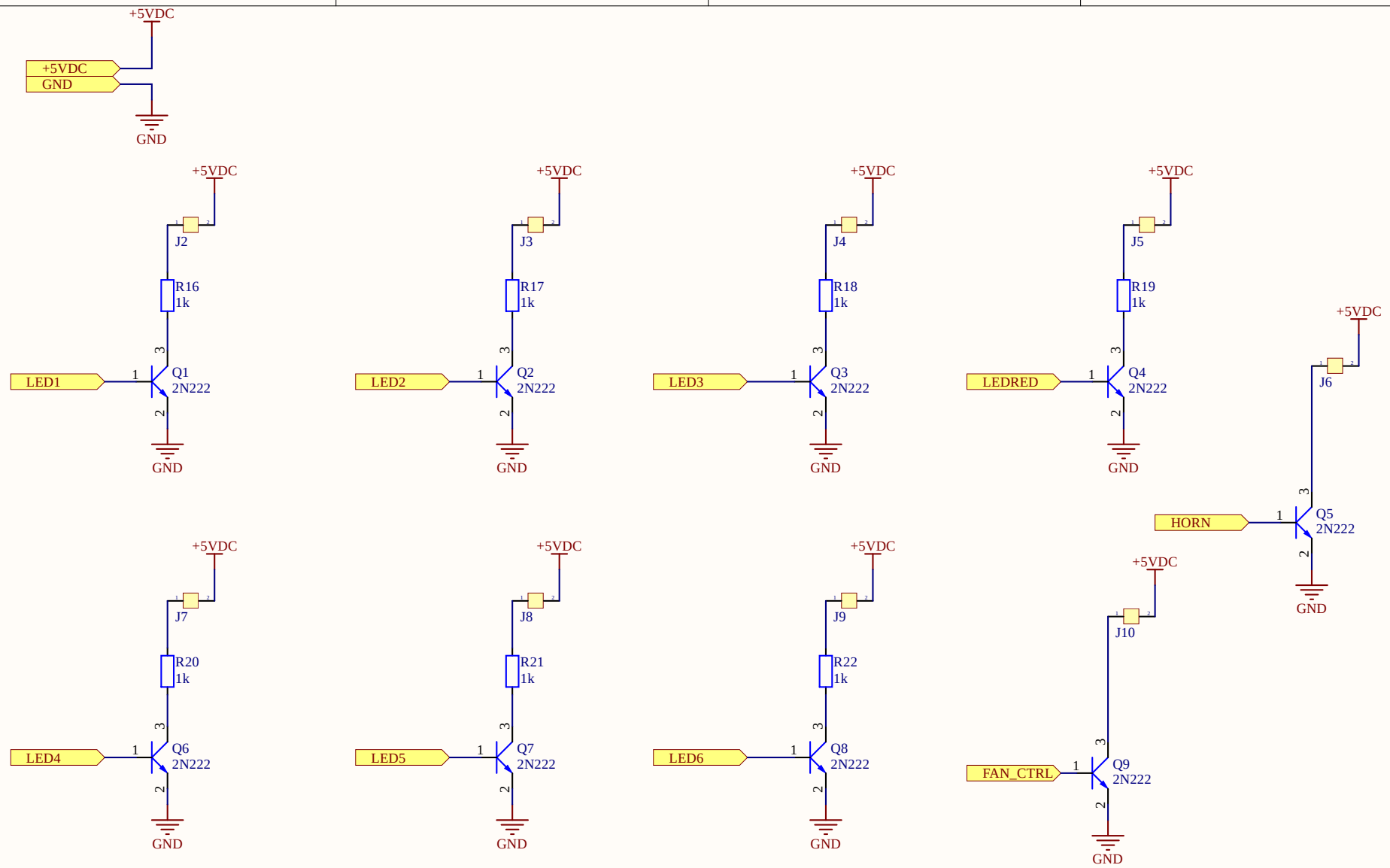

Title		
Size A	Number	Revision
Date: 05/11/2023		Sheet of
File: F:\Long\..\Led_Control.SchDoc		Drawn By:

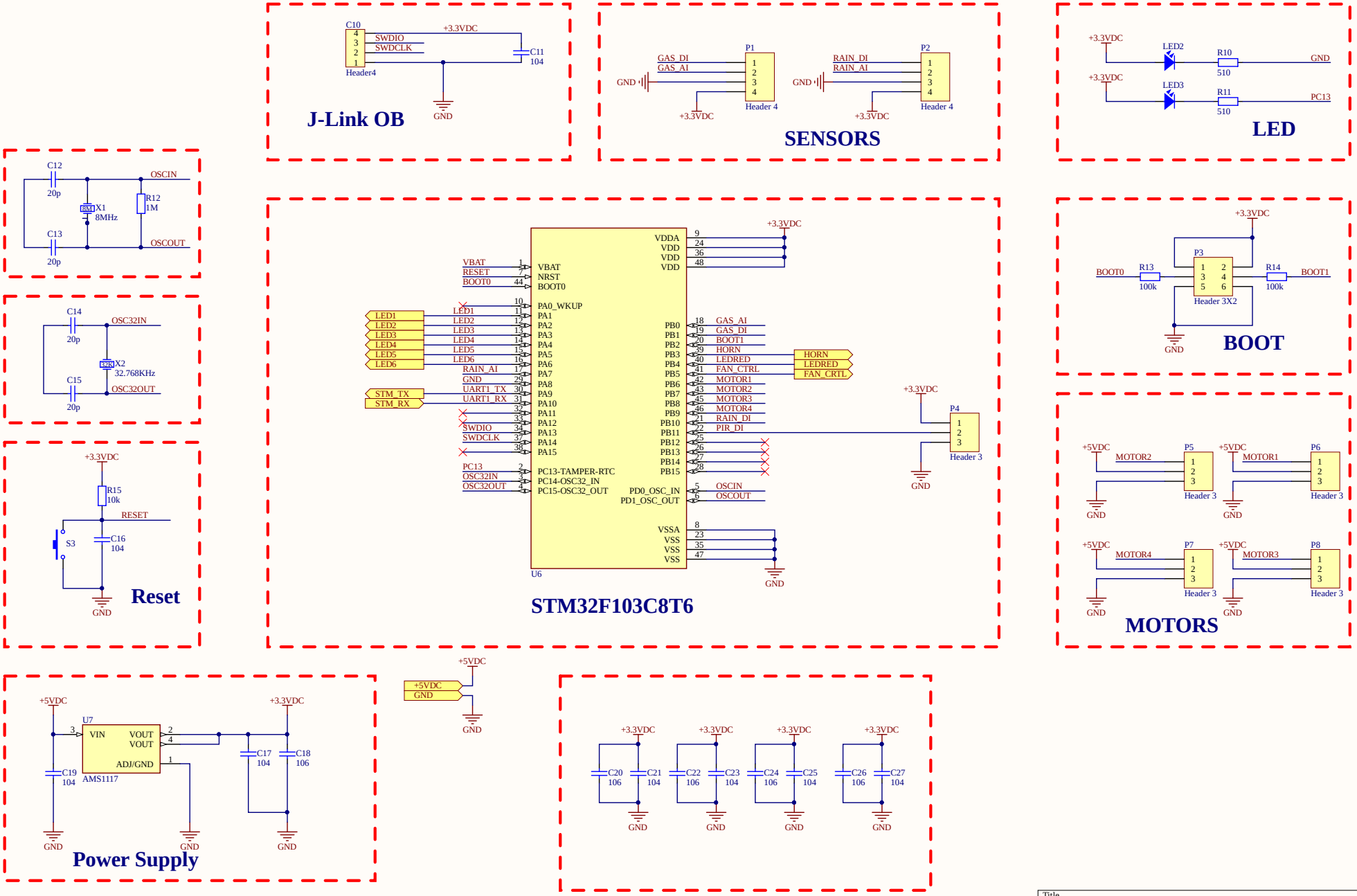

Title		
Size A3	Number	Revision
Date: 05/11/2023	Sheet of	
File: F:\Long\..\STM32.SchDoc	Drawn By:	

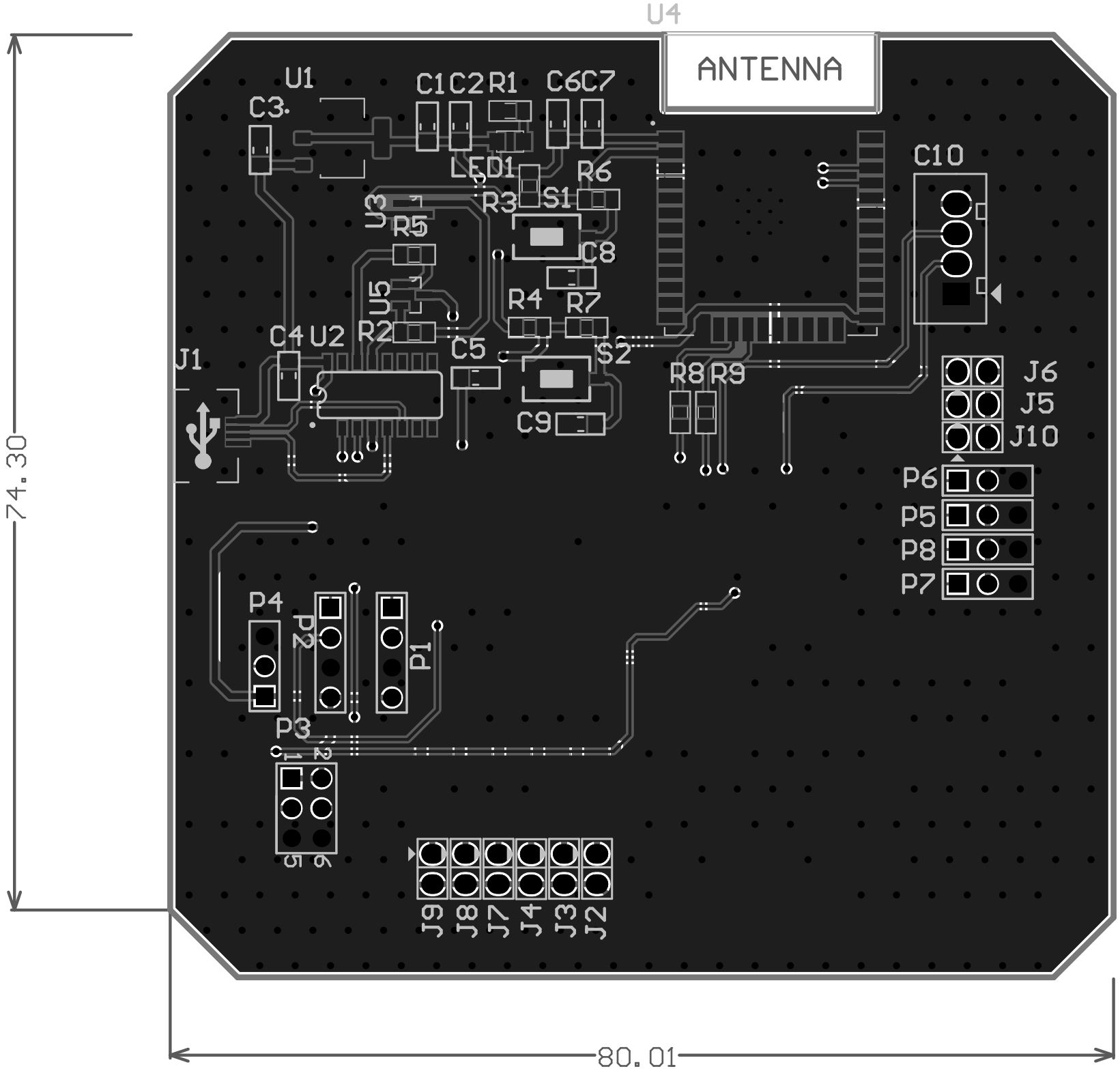
U4
ANTENNA
U1
C3
C1
C2
R1
C6
C7
LED1
R6
R3
S1
U3
R5
C8
U5
R4
R7
C4
U2
R2
C5
S2
J1
R8
R9
C9
C10
J6
J5
J10
P6
P5
P8
P7
P4
P2
P1
P3
J9
J8
J7
J4
J3
J2
74.30
80.01

Comment	Description	Designator	Footprint	LibRef	Quantity
104	Capacitor	C1, C3, C6, C8, C9, C11, C16, C17, C19, C21, C23, C25, C27	CAP_0805	CapSMD	13
106	Capacitor	C2, C18, C20, C22, C24, C26	CAP_0805	CapSMD	6
100nF	Capacitor	C4, C5, C7	CAP_0805	CapSMD	3
Header4	Header IDC, 4 x 1 Pin Vertical 2.54mm Pitch (Non-Boxed, Male)	C10	Header4	Header4	1
20p	Capacitor	C12, C13, C14, C15	CAP_0805	CapSMD	4
USB-5		J1	USB-M1	USB-5	1
Jumper 2	Jumper 2	J2, J3, J4, J5, J6, J7, J8, J9, J10	JP2	JP 2	9
LED	LED Single colour Green and Red	LED1, LED2	LED-0805-Red	LED	2
LED	LED Single colour Green and Red	LED3	LED-0805-Green	LED	1
Header 4	Header, 4-Pin	P1, P2	HDR1X4	Header 4	2
Header 3X2	Header, 3-Pin, Dual row	P3	HDR2X3	Header 3X2	1
Header 3	Header, 3-Pin	P4, P5, P6, P7, P8	HDR1X3	Header 3	5
2N222	NPN 600mW, ECB	Q1, Q2, Q3, Q4, Q5, Q6, Q7, Q8, Q9	SOT23D	2N222	9
1k	Resistor	R1, R16, R17, R18, R19, R20, R21, R22	RES-SMD-0805	Resistor - SMD	8
10k	Resistor	R2, R5, R15	RES-SMD-0805	Resistor - SMD	3
12k	Resistor	R3, R4	RES-SMD-0805	Resistor - SMD	2
470	Resistor	R6, R7	RES-SMD-0805	Resistor - SMD	2
0	Resistor	R8, R9	RES-SMD-0805	Resistor - SMD	2
510	Resistor	R10, R11	RES-SMD-0805	Resistor - SMD	2
1M	Resistor	R12	RES-SMD-0805	Resistor - SMD	1
100k	Resistor	R13, R14	RES-SMD-0805	Resistor - SMD	2
SW-SMD	Switch	S1, S2, S3	SW-SMD	SW-SMD	3
AMS1117	1A LOW DROPOUT VOLTAGE REGULATOR SOT-223	U1, U7	SOT229P700X180-4N	AMS1117	2
CH340C	USB to serial chip CH340	U2	SO016	CH340C	1
BC817-16	Bipolar (BJT) Transistor NPN 45 V 500 mA 100MHz 310 mW Surface Mount SOT-23-3	U3, U5	SOT91P240X110-3N	BC817-16	2
ESP32-WROOM-32	Bluetooth, WiFi Transceiver Module 2.4GHz ~ 2.5GHz Surface Mount	U4	MODULE_ESP32-WROOM-32	ESP32-WROOM-32	1
STM32	STM32 ARM-based 32-bit MCU with 64 Kbytes Flash, 64-pin LQFP, Industrial Temperature	U6	LQFP 48	STM32F103C8T6	1
8MHz	CRYSTAL 8.0000MHZ 18pF SMD	X1	CRYSTAL_ABM3 5x3.2mm	ABM3-8.000MHZ-D2Y-T	1
32.768KHz	CRYSTAL 32.7680KHZ 12.5pF SMD	X2	Crystal_ABS07_SMD-3.2x1.5MM	ABS07-32.768KHZ-T	1