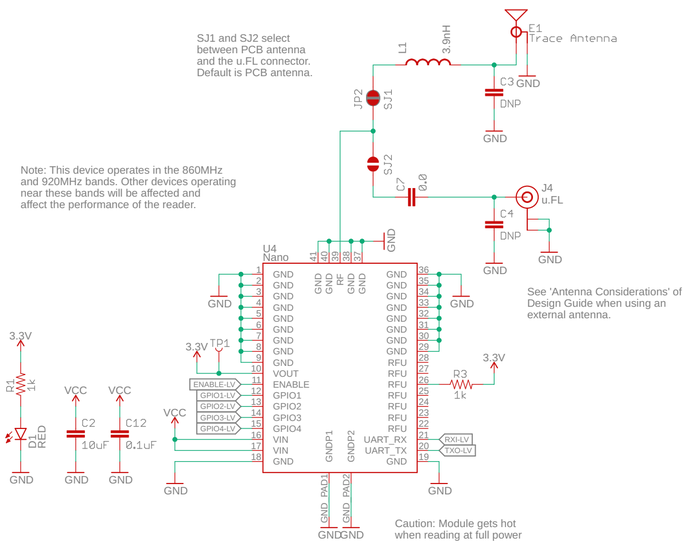

RFID Module

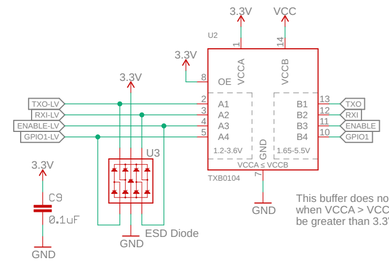

This buffer does not operate when VCCA > VCCB. VCC must be greater than 3.3V.

Open JP1 if powering from a source that you do not want feeding back to USB

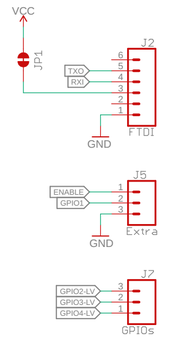

These 3 GPIO-LV pins are 3.3V tolerant. Do not expose them to 5V.

Interface and Logic Conversion

VCC must be 3.7-5.5V

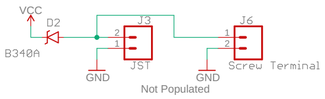

Internal DC-DC will use the following:
900mA @ 5V
1100mA @ 3.7V

External Power

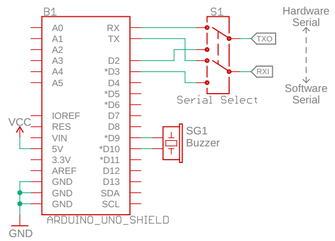

Shield and Serial Select

Changes on v10:

- Decreased size of RF pad to avoid GND pad on module
- Finalized trace antenna design and matching network
- Added thermals to user solderable GND connections
- Opened up heatsink area on bottom of PCB

open hardware

sparkfun

Released under the Creative Commons
Attribution Share-Alike 4.0 License
https://creativecommons.org/licenses/by-sa/4.0/

TITLE: ESLv2

Design by: N. Seidle

REV: v10

Date: not saved!

Sheet: 1/3

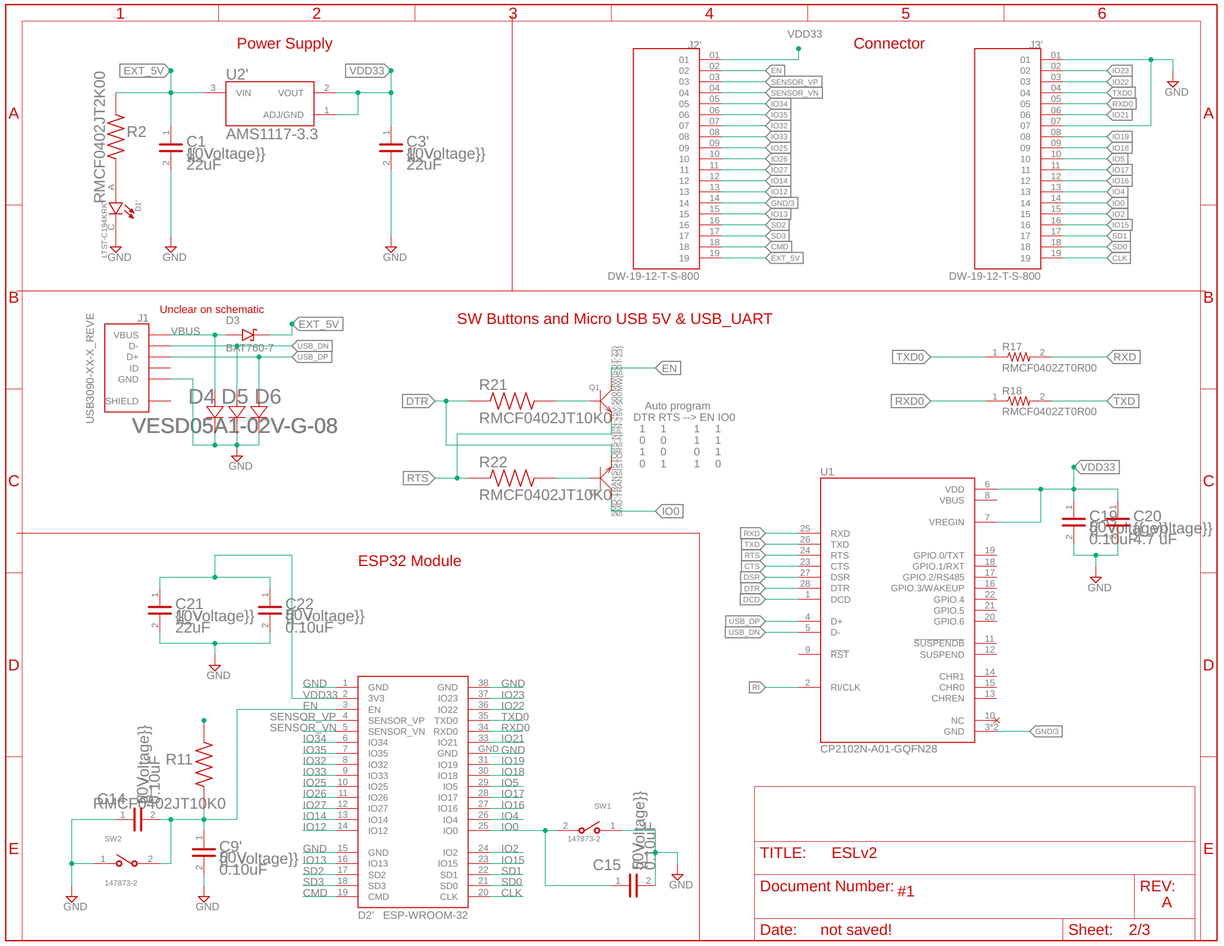

TITLE: ESLv2	
Document Number: #1	REV: A
Date: not saved!	Sheet: 2/3

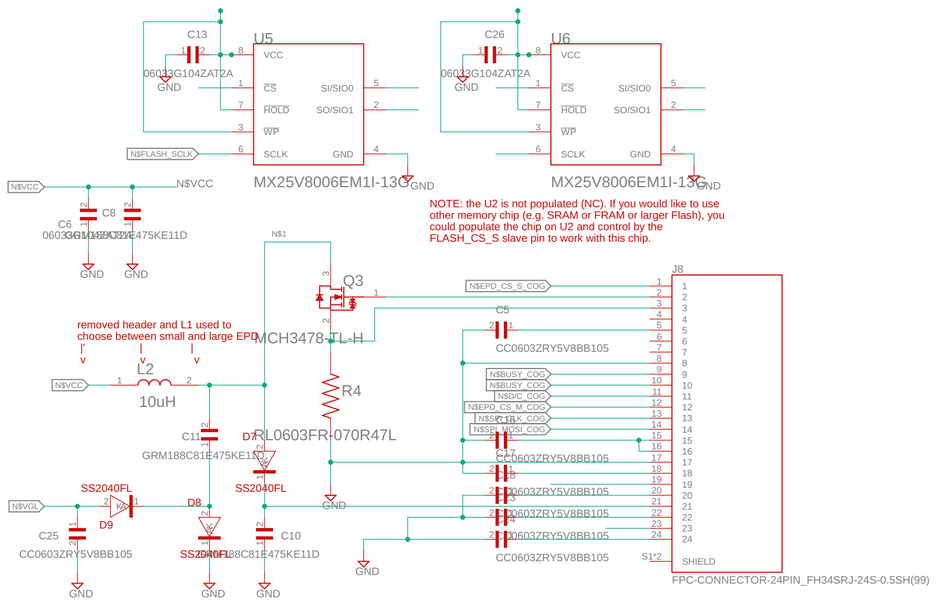
U5
MX25V8006EM1I-13G
U6
MX25V8006EM1I-13G
C13
C26
06033G104ZAT2A
GND
VCC
CS
HOLD
WP
SCLK
SI/SIO0
SO/SIO1
N$FLASH_SCLK
N$VCC
C6
C8
GRM188C81E475KE11D
NOTE: the U2 is not populated (NC). If you would like to use other memory chip (e.g. SRAM or FRAM or larger Flash), you could populate the chip on U2 and control by the FLASH_CS_S slave pin to work with this chip.
N$1
Q3
MCH3478-TL-H
removed header and L1 used to choose between small and large EPD
L2
10uH
R4
RL0603FR-070R47L
C11
D7
SS2040FL
N$VGL
D8
D9
C25
CC0603ZRY5V8BB105
C10
J8
N$EPD_CS_S_COG
C5
N$BUSY_COG
N$DC_COG
N$EPD_CS_M_COG
N$SB_MOSI_COG
C17
SHIELD
FPC-CONNECTOR-24PIN_FH34SRJ-24S-0.5SH(99)