ICM-42688-P Datasheet

High Precision 6-Axis MEMS MotionTracking™ Device

ICM-42688-P HIGHLIGHTS

The ICM-42688-P is a 6-axis MEMS MotionTracking device that combines a 3-axis gyroscope and a 3-axis accelerometer. It has a configurable host interface that supports I3C^{SM}, I^{2}C and SPI serial communication, features a 2 kB FIFO and 2 programmable interrupts with ultra-low-power wake-on-motion support to minimize system power consumption.

ICM-42688-P supports highly accurate external clock input, that helps to reduce system level sensitivity error, improve orientation measurement from gyroscope data, reduce ODR sensitivity to temperature and device to device variation.

The device includes industry first 20-bits data format support in FIFO for high-data resolution. This FIFO format encapsulates 19-bits of gyroscope data and 18-bits of accelerometer data.

Other industry-leading features include InvenSense on-chip APEX Motion Processing engine for gesture recognition, activity classification, and pedometer, along with programmable digital filters, and an embedded temperature sensor.

The device supports a VDD operating range of 1.71V to 3.6V, and a separate digital IO supply, VDDIO from 1.71V to 3.6V.

ICM-42688-P FEATURES

- Gyroscope Noise: 2.8 mdps/√Hz & Accelerometer Noise: 70 µg/√Hz
  - Low-Noise mode 6-axis current consumption of 0.88 mA
- User selectable Gyro Full-scale range (dps): ± 15.6/31.2/62.5/125/250/500/1000/2000
- User selectable Accelerometer Full-scale range (g): ± 2/4/8/16
- User-programmable digital filters for gyro, accel, and temp sensor
- APEX Motion Functions:
  - Pedometer, Tilt Detection, Tap Detection
  - Wake on Motion, Raise to Wake/Sleep, Significant Motion Detection
- Host interface: 12.5 MHz I3C^{SM}, 1 MHz I^{2}C, 24 MHz SPI

APPLICATIONS

- AR/VR Controllers
- Head Mounted Displays
- Wearables
- Sports
- Robotics
- IoT Applications

BLOCK DIAGRAM

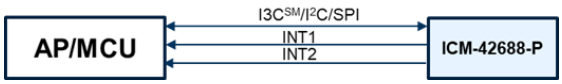

ORDERING INFORMATION

PART	TEMP RANGE	PACKAGE
ICM-42688-P†	−40°C to +85°C	2.5x3mm 14-Pin LGA

†Denotes RoHS and Green-Compliant Package

TDK-INVENSENSE SENSORS FOR SMARTPHONE, MOBILE & IOT APPLICATIONS

Parameter	ICM-40607 Sensorhub	ICM-42605 Sensorhub	ICM-42686-P Handheld Action	ICM-42688-P HMD & Robotics
GYRO Noise (mdps/rt-Hz)	7	3.8	5.3	2.8
GYRO Offset Temp Stability (mdps/°C)	±30	±20	±10	±5
GYRO Range & Resolution	±2000dps; 16-bits	±2000dps; 16-bits	±4000dps; 16/19-bits	±2000dps; 16/19-bits
ACCEL Noise (µg/rt-Hz)	110	70	70	AXY: 65; AZ: 70
ACCEL Range & Resolution	±16g; 16-bits	±16g; 16-bits	±32g; 16/18-bits	±16g; 16/18-bits
ODR & Sample Synch	8kHz; No RTC	8kHz; No RTC	32kHz; RTC	32kHz; RTC

InvenSense Inc. reserves the right to change specifications and information herein without notice unless the product is in mass production and the datasheet has been designated by InvenSense in writing as subject to a specified Product / Process Change Notification Method regulation.

InvenSense, a TDK Group Company
1745 Technology Drive, San Jose, CA 95110 U.S.A
+1(408) 988–7339
invensense.tdk.com

Document Number: DS-000347
Revision: 1.6
Rev. Date: 06/20/2021

TABLE OF CONTENTS

ICM-42688-P Highlights 1
Block Diagram 1
ICM-42688-P Features 1
Applications 1
Ordering Information 1
TDK-Invensense Sensors for Smartphone, Mobile & IoT Applications 1
Table of Figures 8
Table of Tables 8
1 Introduction 9
1.1 Purpose and Scope 9
1.2 Product Overview 9
1.3 Applications 9
2 Features 10
2.1 Gyroscope Features 10
2.2 Accelerometer Features 10
2.3 Motion Features 10
2.4 Additional Features 10
3 Electrical Characteristics 11
3.1 Gyroscope Specifications 11
3.2 Accelerometer Specifications 12
3.3 Electrical Specifications 13
3.4 I^2C Timing Characterization 15
3.5 SPI Timing Characterization – 4-Wire SPI Mode 16
3.6 SPI Timing Characterization – 3-Wire SPI Mode 17
3.7 RTC (CLKIN) Timing Characterization 18
3.8 Absolute Maximum Ratings 19
4 Applications Information 20
4.1 Pin Out Diagram and Signal Description 20
4.2 Typical Operating Circuit 21
4.3 Bill of Materials for External Components 22
4.4 System Block Diagram 23
4.5 Overview 23
4.6 Three-Axis MEMS Gyroscope with 16-bit ADCs and Signal Conditioning 23
4.7 Three-Axis MEMS Accelerometer with 16-bit ADCs and Signal Conditioning 23
4.8 I3C^{SM}, I^2C and SPI Host Interface 23
4.9 Self-Test 23
4.10 Clocking 24

4.11 Sensor Data Registers 24
4.12 Interrupts 24
4.13 Digital-Output Temperature Sensor 25
4.14 Bias and LDOs 25
4.15 Charge Pump 25
4.16 Standard Power Modes 25
5 Signal Path 26
5.1 Summary of Parameters Used to Configure the Signal Path 26
5.2 Notch Filter 26
5.3 Anti-Alias Filter 28
5.4 User Programmable Offset 30
5.5 UI Filter Block 30
5.6 UI Path ODR And FSR Selection 34
6 FIFO 37
6.1 Packet Structure 37
6.2 FIFO Header 39
6.3 Maximum FIFO Storage 40
6.4 FIFO Configuration Registers 40
7 Programmable Interrupts 42
8 APEX Motion Functions 43
8.1 APEX ODR Support 43
8.2 DMP Power Save Mode 44
8.3 Pedometer Programming 44
8.4 Tilt Detection Programming 45
8.5 Raise to Wake/Sleep Programming 45
8.6 Tap Detection Programming 46
8.7 Wake on Motion Programming 47
8.8 Significant Motion Detection Programming 47
9 Digital Interface 49
9.1 I3C^{SM}, I^{2}C and SPI Serial Interfaces 49
9.2 I3C^{SM} Interface 49
9.3 I^{2}C Interface 49
9.4 I^{2}C Communications Protocol 49
9.5 I^{2}C Terms 51
9.6 SPI Interface 53
10 Assembly 54
10.1 Orientation of Axes 54
10.2 Package Dimensions 55
11 Part Number Package Marking 57
12 Use Notes 58

12.1 Accelerometer Mode Transitions 58
12.2 Accelerometer Low Power (LP) Mode Averaging Filter Setting 58
12.3 Settings for I²C, I3C^SM, and SPI Operation 58
12.4 Notch Filter and Anti-Alias Filter Operation 58
12.5 External Clock Input Effect on ODR 58
12.6 INT_ASYNC_RESET Configuration 59
12.7 FIFO Timestamp Interval Scaling 59
12.8 Supplementary Information for FIFO_HOLD_LAST_DATA_EN 59
12.9 Register Values Modification 60
13 Register Map 61
13.1 User Bank 0 Register Map 61
13.2 User Bank 1 Register Map 62
13.3 User Bank 2 Register Map 63
13.4 User Bank 4 Register Map 63
14 User Bank 0 Register Map – Descriptions 64
14.1 DEVICE_CONFIG 64
14.2 DRIVE_CONFIG 64
14.3 INT_CONFIG 65
14.4 FIFO_CONFIG 65
14.5 TEMP_DATA1 65
14.6 TEMP_DATA0 66
14.7 ACCEL_DATA_X1 66
14.8 ACCEL_DATA_X0 66
14.9 ACCEL_DATA_Y1 66
14.10 ACCEL_DATA_Y0 67
14.11 ACCEL_DATA_Z1 67
14.12 ACCEL_DATA_Z0 67
14.13 GYRO_DATA_X1 67
14.14 GYRO_DATA_X0 67
14.15 GYRO_DATA_Y1 68
14.16 GYRO_DATA_Y0 68
14.17 GYRO_DATA_Z1 68
14.18 GYRO_DATA_Z0 68
14.19 TMST_FSYNCH 68
14.20 TMST_FSYNCL 69
14.21 INT_STATUS 69
14.22 FIFO_COUNTH 69
14.23 FIFO_COUNTL 70
14.24 FIFO_DATA 70
14.25 APEX_DATA0 70

14.26 APEX_DATA1 70
14.27 APEX_DATA2 71
14.28 APEX_DATA3 71
14.29 APEX_DATA4 72
14.30 APEX_DATA5 72
14.31 INT_STATUS2 73
14.32 INT_STATUS3 73
14.33 SIGNAL_PATH_RESET 73
14.34 INTF_CONFIG0 74
14.35 INTF_CONFIG1 75
14.36 PWR_MGMT0 76
14.37 GYRO_CONFIG0 77
14.38 ACCEL_CONFIG0 78
14.39 GYRO_CONFIG1 79
14.40 GYRO_ACCEL_CONFIG0 80
14.41 ACCEL_CONFIG1 81
14.42 TMST_CONFIG 81
14.43 APEX_CONFIG0 82
14.44 SMD_CONFIG 82
14.45 FIFO_CONFIG1 83
14.46 FIFO_CONFIG2 83
14.47 FIFO_CONFIG3 83
14.48 FSYNC_CONFIG 84
14.49 INT_CONFIG0 84
14.50 INT_CONFIG1 85
14.51 INT_SOURCE0 85
14.52 INT_SOURCE1 86
14.53 INT_SOURCE3 86
14.54 INT_SOURCE4 87
14.55 FIFO_LOST_PKT0 87
14.56 FIFO_LOST_PKT1 87
14.57 SELF_TEST_CONFIG 88
14.58 WHO_AM_I 88
14.59 REG_BANK_SEL 88
15 User Bank 1 Register Map – Descriptions 89
15.1 SENSOR_CONFIG0 89
15.2 GYRO_CONFIG_STATIC2 89
15.3 GYRO_CONFIG_STATIC3 89
15.4 GYRO_CONFIG_STATIC4 90
15.5 GYRO_CONFIG_STATIC5 90

15.6 GYRO_CONFIG_STATIC6 90
15.7 GYRO_CONFIG_STATIC7 90
15.8 GYRO_CONFIG_STATIC8 91
15.9 GYRO_CONFIG_STATIC9 91
15.10 GYRO_CONFIG_STATIC10 91
15.11 XG_ST_DATA 92
15.12 YG_ST_DATA 92
15.13 ZG_ST_DATA 92
15.14 TMSTVAL0 92
15.15 TMSTVAL1 93
15.16 TMSTVAL2 93
15.17 INTF_CONFIG4 93
15.18 INTF_CONFIG5 94
15.19 INTF_CONFIG6 94
16 User Bank 2 Register Map – Descriptions 95
16.1 ACCEL_CONFIG_STATIC2 95
16.2 ACCEL_CONFIG_STATIC3 95
16.3 ACCEL_CONFIG_STATIC4 95
16.4 XA_ST_DATA 95
16.5 YA_ST_DATA 96
16.6 ZA_ST_DATA 96
17 User Bank 4 Register Map – Descriptions 97
17.1 APEX_CONFIG1 97
17.2 APEX_CONFIG2 98
17.3 APEX_CONFIG3 99
17.4 APEX_CONFIG4 100
17.5 APEX_CONFIG5 100
17.6 APEX_CONFIG6 101
17.7 APEX_CONFIG7 101
17.8 APEX_CONFIG8 101
17.9 APEX_CONFIG9 102
17.10 ACCEL_WOM_X_THR 102
17.11 ACCEL_WOM_Y_THR 102
17.12 ACCEL_WOM_Z_THR 102
17.13 INT_SOURCE6 103
17.14 INT_SOURCE7 103
17.15 INT_SOURCE8 104
17.16 INT_SOURCE9 104
17.17 INT_SOURCE10 105
17.18 OFFSET_USER0 105

17.19 OFFSET_USER1 105
17.20 OFFSET_USER2 106
17.21 OFFSET_USER3 106
17.22 OFFSET_USER4 106
17.23 OFFSET_USER5 106
17.24 OFFSET_USER6 107
17.25 OFFSET_USER7 107
17.26 OFFSET_USER8 107
18 Reference 108
19 Document Information 109
19.1 Revision History 109

TABLE OF FIGURES

Figure 1. I²C Bus Timing Diagram 15
Figure 2. 4-Wire SPI Bus Timing Diagram 16
Figure 3. 3-Wire SPI Bus Timing Diagram 17
Figure 4. RTC Timing Diagram 18
Figure 5. Pin Out Diagram for ICM-42688-P 2.5x3.0x0.91 mm LGA 20
Figure 6. ICM-42688-P Application Schematic (I3C^SM / I²C Interface to Host) 21
Figure 7. ICM-42688-P Application Schematic (SPI Interface to Host) 21
Figure 8. ICM-42688-P System Block Diagram 23
Figure 9. ICM-42688-P Signal Path 26
Figure 10. FIFO Packet Structure 37
Figure 11. Maximum FIFO Storage 40
Figure 12. START and STOP Conditions 50
Figure 13. Acknowledge on the I²C Bus 50
Figure 14. Complete I²C Data Transfer 51
Figure 15. Typical SPI Master/Slave Configuration 53
Figure 16. Orientation of Axes of Sensitivity and Polarity of Rotation 54

TABLE OF TABLES

Table 1. Gyroscope Specifications 11
Table 2. Accelerometer Specifications 12
Table 3. D.C. Electrical Characteristics 13
Table 4. A.C. Electrical Characteristics 14
Table 5. I²C Timing Characteristics 15
Table 6. 4-Wire SPI Timing Characteristics (24-MHz Operation) 16
Table 7. 3-Wire SPI Timing Characteristics (24-MHz Operation) 17
Table 8. RTC Timing Characteristics 18
Table 9. Absolute Maximum Ratings 19
Table 10. Signal Descriptions 20
Table 11. Bill of Materials 22
Table 12. Standard Power Modes for ICM-42688-P 25
Table 13. I²C Terms 52

1 INTRODUCTION

1.1 PURPOSE AND SCOPE

This document is a product specification, providing a description, specifications, and design related information on the ICM-42688-P Single-Interface MotionTracking device. The device is housed in a small 2.5x3x0.91 mm 14-pin LGA package.

1.2 PRODUCT OVERVIEW

The ICM-42688-P is a 6-axis MotionTracking device that combines a 3-axis gyroscope, and a 3-axis accelerometer in a small 2.5x3x0.91 mm (14-pin LGA) package. It also features a 2K-byte FIFO that can lower the traffic on the serial bus interface, and reduce power consumption by allowing the system processor to burst read sensor data and then go into a low-power mode. ICM-42688-P, with its 6-axis integration, enables manufacturers to eliminate the costly and complex selection, qualification, and system level integration of discrete devices, guaranteeing optimal motion performance for consumers.

The gyroscope supports eight programmable full-scale range settings from ±15.625dps to ±2000dps, and the accelerometer supports four programmable full-scale range settings from ±2g to ±16g.

ICM-42688-P also supports external clock input for highly accurate 31kHz to 50kHz clock, that helps to reduce system level sensitivity error, improve orientation measurement from gyroscope data, reduce ODR sensitivity to temperature and device to device variation.

The device includes industry first 20-bits data format support in FIFO for high-data resolution. This FIFO format encapsulates 19-bits of gyroscope data and 18-bits of accelerometer data for high precision applications. Other industry-leading features include on-chip 16-bit ADCs, programmable digital filters, an embedded temperature sensor, and programmable interrupts. The device features I3C^{SM}, I^{2}C and SPI serial interfaces, a VDD operating range of 1.71 V to 3.6 V, and a separate VDDIO operating range of 1.71 V to 3.6 V.

The host interface can be configured to support I3C^{SM} slave, I^{2}C slave, or SPI slave modes. The I3C^{SM} interface supports speeds up to 12.5MHz (data rates up to 12.5Mbps in SDR mode, 25Mbps in DDR mode), the I^{2}C interface supports speeds up to 1 MHz, and the SPI interface supports speeds up to 24 MHz.

By leveraging its patented and volume-proven CMOS-MEMS fabrication platform, which integrates MEMS wafers with companion CMOS electronics through wafer-level bonding, InvenSense has driven the package size down to a footprint and thickness of 2.5x3x0.91 mm (14-pin LGA), to provide a very small yet high performance low cost package. The device provides high robustness by supporting 20,000*g* shock reliability.

1.3 APPLICATIONS

- AR/VR Controllers
- Head Mounted Displays
- Wearables
- Sports
- Robotics

2 FEATURES

2.1 GYROSCOPE FEATURES

The triple-axis MEMS gyroscope in the ICM-42688-P includes a wide range of features:

- Digital-output X-, Y-, and Z-axis angular rate sensors (gyroscopes) with programmable full-scale range of ±15.625, ±31.25, ±62.5, ±125, ±250, ±500, ±1000, and ±2000 degrees/sec
- Low Noise (LN) power mode support
- Digitally-programmable low-pass filters
- Factory calibrated sensitivity scale factor
- Self-test

2.2 ACCELEROMETER FEATURES

The triple-axis MEMS accelerometer in ICM-42688-P includes a wide range of features:

- Digital-output X-, Y-, and Z-axis accelerometer with programmable full-scale range of ±2*g*, ±4*g* ±8*g* and ±16*g*
- Low Noise (LN) and Low Power (LP) power modes support
- User-programmable interrupts
- Wake-on-motion interrupt for low power operation of applications processor
- Self-test

2.3 MOTION FEATURES

ICM-42688-P includes the following motion features, also known as APEX (**A**dvanced **P**edometer and **E**vent Detection – ne**X**t gen)

- Pedometer: Tracks Step Count, also issues Step Detect interrupt
- Tilt Detection: Issues an interrupt when the Tilt angle exceeds 35° for more than a programmable time
- Raise to Wake/Sleep: Gesture detection for wake and sleep events. Interrupt is issued when either of these two events are detected
- Tap Detection: Issues an interrupt when a tap is detected, along with the tap count
- Wake on Motion: Detects motion when accelerometer data exceeds a programmable threshold
- Significant Motion Detection: Detects Significant Motion if Wake on Motion events are detected during a programmable time window

2.4 ADDITIONAL FEATURES

ICM-42688-P includes the following additional features:

- External clock input supports highly accurate clock input from 31kHz to 50kHz, helps to reduce system level sensitivity error, improve orientation measurement from gyroscope data, reduce ODR sensitivity to temperature and device to device variation
- 2K byte FIFO buffer enables the applications processor to read the data in bursts
- 20-bits data format support in FIFO for high-data resolution
- User-programmable digital filters for gyroscope, accelerometer, and temperature sensor
- 12.5MHz I3C^{SM} (data rates up to 12.5Mbps in SDR mode, 25Mbps in DDR mode) / 1 MHz I^{2}C / 24 MHz SPI slave host interface
- Digital-output temperature sensor
- Smallest and thinnest LGA package for portable devices: 2.5x3x0.91 mm (14-pin LGA)
- 20,000 *g* shock tolerant
- MEMS structure hermetically sealed and bonded at wafer level
- RoHS and Green compliant

3 ELECTRICAL CHARACTERISTICS

3.1 GYROSCOPE SPECIFICATIONS

Typical Operating Circuit of section 4.2, VDD = 1.8 V, VDDIO = 1.8 V, T_A=25°C, unless otherwise noted.

PARAMETER	CONDITIONS	MIN	TYP	MAX	UNITS	NOTES
GYROSCOPE SENSITIVITY						
Full-Scale Range	GYRO_FS_SEL=0		±2000		º/s	2
	GYRO_FS_SEL =1		±1000		º/s	2
	GYRO_FS_SEL =2		±500		º/s	2
	GYRO_FS_SEL =3		±250		º/s	2
	GYRO_FS_SEL =4		±125		º/s	2
	GYRO_FS_SEL =5		±62.5		º/s	2
	GYRO_FS_SEL =6		±31.25		º/s	2
	GYRO_FS_SEL =7		±15.625		º/s	2
Gyroscope ADC Word Length	Output in two's complement format		16		bits	2, 5
Sensitivity Scale Factor	GYRO_FS_SEL=0		16.4		LSB/(º/s)	2
	GYRO_FS_SEL =1		32.8		LSB/(º/s)	2
	GYRO_FS_SEL =2		65.5		LSB/(º/s)	2
	GYRO_FS_SEL =3		131		LSB/(º/s)	2
	GYRO_FS_SEL =4		262		LSB/(º/s)	2
	GYRO_FS_SEL =5		524.3		LSB/(º/s)	2
	GYRO_FS_SEL =6		1048.6		LSB/(º/s)	2
	GYRO_FS_SEL =7		2097.2		LSB/(º/s)	2
Sensitivity Scale Factor Initial Tolerance	Component and Board-level, 25°C		±0.5		%	1
Sensitivity Scale Factor Variation Over Temperature	0°C to +70°C		±0.005		%/ºC	3
Nonlinearity	Best fit straight line; 25°C		±0.1		%	3
Cross-Axis Sensitivity	Board-level		±1.25		%	3
ZERO-RATE OUTPUT (ZRO)						
Initial ZRO Tolerance	Board-level, 25°C		±0.5		º/s	3
ZRO Variation vs. Temperature	0°C to +70°C		±0.005		º/s/ºC	3
OTHER PARAMETERS						
Rate Noise Spectral Density	@ 10 Hz		0.0028		º/s /√Hz	1
Total RMS Noise	Bandwidth = 100 Hz		0.028		º/s-rms	4
Gyroscope Mechanical Frequencies		25	27	29	KHz	1
Low Pass Filter Response	ODR < 1kHz	5		500	Hz	2
	ODR ≥ 1kHz	42		3979	Hz	2
Gyroscope Start-Up Time	Time from gyro enable to gyro drive ready		30		ms	3
Output Data Rate		12.5		32000	Hz	2

Table 1. Gyroscope Specifications

Notes:

1. Tested in production.
2. Guaranteed by design.
3. Derived from validation or characterization of parts, not tested in production.
4. Calculated from Rate Noise Spectral Density.
5. 20-bits data format supported in FIFO, see section 6.1.

3.2 ACCELEROMETER SPECIFICATIONS

Typical Operating Circuit of section 4.2, VDD = 1.8 V, VDDIO = 1.8 V, T_A=25°C, unless otherwise noted.

PARAMETER	CONDITIONS		MIN	TYP	MAX	UNITS	NOTES
ACCELEROMETER SENSITIVITY							
Full-Scale Range	ACCEL_FS_SEL =0			±16		*g*	2
	ACCEL_FS_SEL =1			±8		*g*	2
	ACCEL_FS_SEL =2			±4		*g*	2
	ACCEL_FS_SEL =3			±2		*g*	2
ADC Word Length	Output in two's complement format			16		bits	2, 5
Sensitivity Scale Factor	ACCEL_FS_SEL =0			2,048		LSB/*g*	2
	ACCEL_FS_SEL =1			4,096		LSB/*g*	2
	ACCEL_FS_SEL =2			8,192		LSB/*g*	2
	ACCEL_FS_SEL =3			16,384		LSB/*g*	2
Sensitivity Scale Factor Initial Tolerance	Component and Board-level, 25°C			±0.5		%	1
Sensitivity Change vs. Temperature	-40°C to +85°C			±0.005		%/ºC	3
Nonlinearity	Best Fit Straight Line, ±2g			±0.1		%	3
Cross-Axis Sensitivity	Board-level			±1		%	3
ZERO-G OUTPUT							
Initial Tolerance	Board-level, all axes			±20		m*g*	3
Zero-G Level Change vs. Temperature	-40°C to +85°C			±0.15		m*g*/ºC	3
OTHER PARAMETERS							
Power Spectral Density	@ 10 Hz	X and Y-axis		65		µ*g*/√Hz	1
		Z-axis		70		µ*g*/√Hz	1
RMS Noise	Bandwidth = 100 Hz	X and Y-axis		0.65		mg-rms	4
		Z-axis		0.70		mg-rms	4
Low-Pass Filter Response	ODR < 1kHz		5		500	Hz	2
	ODR ≥ 1kHz		42		3979	Hz	2
Accelerometer Startup Time	From sleep mode to valid data			10		ms	3
Output Data Rate			1.5625		32000	Hz	2

Table 2. Accelerometer Specifications

Notes:

1. Tested in production.
2. Guaranteed by design.
3. Derived from validation or characterization of parts, not tested in production.
4. Calculated from Power Spectral Density.
5. 20-bits data format supported in FIFO, see section 6.1.

3.3 ELECTRICAL SPECIFICATIONS

3.3.1 D.C. Electrical Characteristics

Typical Operating Circuit of section 4.2, VDD = 1.8 V, VDDIO = 1.8 V, T_A=25°C, unless otherwise noted.

PARAMETER	CONDITIONS	MIN	TYP	MAX	UNITS	NOTES
SUPPLY VOLTAGES						
VDD		1.71	1.8	3.6	V	1
VDDIO		1.71	1.8	3.6	V	1
SUPPLY CURRENTS						
Low-Noise Mode	6-Axis Gyroscope + Accelerometer		0.88		mA	2
	3-Axis Accelerometer		0.28		mA	2
	3-Axis Gyroscope		0.73		mA	2
Full-Chip Sleep Mode	At 25ºC		7.5		µA	2
TEMPERATURE RANGE						
Specified Temperature Range	Performance parameters are not applicable beyond Specified Temperature Range	-40		+85	°C	1

Table 3. D.C. Electrical Characteristics

Notes:

1. Guaranteed by design.
2. Derived from validation or characterization of parts, not tested in production.

3.3.2 A.C. Electrical Characteristics

Typical Operating Circuit of section 4.2, VDD = 1.8 V, VDDIO = 1.8 V, T_A=25°C, unless otherwise noted.

PARAMETER	CONDITIONS	MIN	TYP	MAX	UNITS	NOTES
SUPPLIES						
Supply Ramp Time	Monotonic ramp. Ramp rate is 10% to 90% of the final value	0.01		3	ms	1
Power Supply Noise			10		mV peak-peak	1
TEMPERATURE SENSOR						
Operating Range	Ambient	-40		85	°C	1
25°C Output			0		LSB	3
ADC Resolution	Output in two's complement format		16		bits	2
ODR	With Filter	25		8000	Hz	2
Room Temperature Offset	25°C	-5		5	°C	3
Stabilization Time				14000	µs	2
Sensitivity	Untrimmed		132.48		LSB/°C	1
Sensitivity for FIFO data			2.07		LSB/°C	1
POWER-ON RESET						
Start-up time for register read/write	From power-up			1	ms	1
I²C ADDRESS						
I²C ADDRESS	AP_AD0 = 0 AP_AD0 = 1		1101000 1101001			
DIGITAL INPUTS (FSYNC, SCLK, SDI, CS)						
V_{IH}, High Level Input Voltage		0.7*VDDIO			V	1
V_{IL}, Low Level Input Voltage				0.3*VDDIO	V	1
C_I, Input Capacitance			< 10		pF	1
DIGITAL OUTPUT (SDO, INT1, INT2)						
V_{OH}, High Level Output Voltage	R_{LOAD}=1 MΩ;	0.9*VDDIO			V	1
V_{OL1}, LOW-Level Output Voltage	R_{LOAD}=1 MΩ;			0.1*VDDIO	V	1
$V_{OL.INT}$, INT Low-Level Output Voltage	OPEN=1, 0.3 mA sink Current			0.1	V	1
Output Leakage Current	OPEN=1		100		nA	1
t_{INT}, INT Pulse Width	int_tpulse_duration= 0 , 1 (100us, 8us) ;	8		100	µs	1
I²C I/O (SCL, SDA)						
V_{IL}, LOW-Level Input Voltage		-0.5 V		0.3*VDDIO	V	1
V_{IH}, HIGH-Level Input Voltage		0.7*VDDIO		VDDIO + 0.5 V	V	1
V_{hys}, Hysteresis			0.1*VDDIO		V	1
V_{OL}, LOW-Level Output Voltage	3 mA sink current	0		0.4	V	1
I_{OL}, LOW-Level Output Current	V_{OL}=0.4 V V_{OL}=0.6 V		3 6		mA mA	1
Output Leakage Current			100		nA	1
t_{of}, Output Fall Time from V_{IHmax} to V_{ILmax}	C_b bus capacitance in pf	20+0.1C_b		300	ns	1
INTERNAL CLOCK SOURCE						
Clock Frequency Initial Tolerance	CLKSEL=`2b00 or gyro inactive; 25°C	-3		+3	%	1
	CLK_SEL=`2b01 and gyro active; 25°C	-1.5		+1.5	%	1
Frequency Variation over Temperature	CLK_SEL=`2b00 or gyro inactive; -40°C to +85°C			±3	%	1
	CLK_SEL=`2b01 and gyro active; -40°C to +85°C			±2	%	1
EXTERNAL CLOCK SOURCE						
Clock Frequency		31	32	50	kHz	1

Table 4. A.C. Electrical Characteristics

Notes:

1. Based on characterization. Not tested in production.
2. Guaranteed by design.
3. Production tested.

3.4 I²C TIMING CHARACTERIZATION

Typical Operating Circuit of section 4.2, VDD = 1.8 V, VDDIO = 1.8 V, T_A=25°C, unless otherwise noted.

Parameters	Conditions	Min	Typical	Max	Units	Notes
I²C TIMING	**I²C FAST-MODE PLUS**					
f_{SCL}, SCL Clock Frequency				1	MHz	1
$t_{HD.STA}$, (Repeated) START Condition Hold Time		0.26			µs	1
t_{LOW}, SCL Low Period		0.5			µs	1
t_{HIGH}, SCL High Period		0.26			µs	1
$t_{SU.STA}$, Repeated START Condition Setup Time		0.26			µs	1
$t_{HD.DAT}$, SDA Data Hold Time		0			µs	1
$t_{SU.DAT}$, SDA Data Setup Time		50			ns	1
t_r, SDA and SCL Rise Time	C_b bus cap. from 10 to 400 pF			120	ns	1
t_f, SDA and SCL Fall Time	C_b bus cap. from 10 to 400 pF			120	ns	1
$t_{SU.STO}$, STOP Condition Setup Time		0.5			µs	1
t_{BUF}, Bus Free Time Between STOP and START Condition		0.5			µs	1
C_b, Capacitive Load for each Bus Line			< 400		pF	1
$t_{VD.DAT}$, Data Valid Time				0.45	µs	1
$t_{VD.ACK}$, Data Valid Acknowledge Time				0.45	µs	1

Table 5. I²C Timing Characteristics

Notes:

1. Based on characterization of 5 parts over temperature and voltage as mounted on evaluation board or in sockets

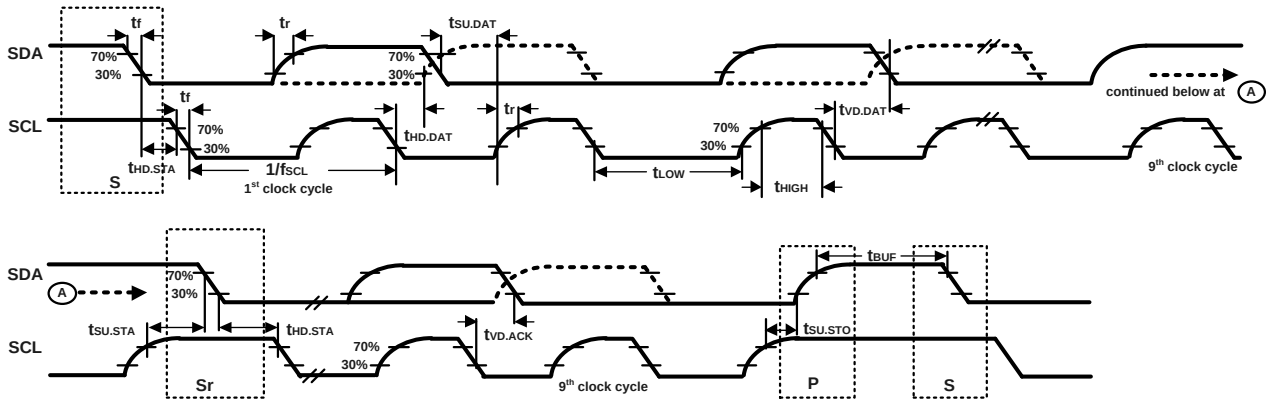

Figure 1. I²C Bus Timing Diagram

3.5 SPI TIMING CHARACTERIZATION – 4-WIRE SPI MODE

Typical Operating Circuit of section 4.2, VDD = 1.8 V, VDDIO = 1.8 V, T_A=25°C, unless otherwise noted.

PARAMETERS	CONDITIONS	MIN	TYP	MAX	UNITS	NOTES
SPI TIMING						
f_{SPC}, SCLK Clock Frequency	Default			24	MHz	1
t_{LOW}, SCLK Low Period		17			ns	1
t_{HIGH}, SCLK High Period		17			ns	1
$t_{SU.CS}$, CS Setup Time		39			ns	1
$t_{HD.CS}$, CS Hold Time		18			ns	1
$t_{SU.SDI}$, SDI Setup Time		13			ns	1
$t_{HD.SDI}$, SDI Hold Time		8			ns	1
$t_{VD.SDO}$, SDO Valid Time	C_{load} = 20 pF			21.5	ns	1
$t_{HD.SDO}$, SDO Hold Time	C_{load} = 20 pF	3.5			ns	1
$t_{DIS.SDO}$, SDO Output Disable Time				28	ns	1
t_{Fall}, SCLK Fall Time				16	ns	2
t_{Rise}, SCLK Rise Time				16	ns	2

Table 6. 4-Wire SPI Timing Characteristics (24-MHz Operation)

Notes:

1. Based on characterization of 5 parts over temperature and voltage as mounted on evaluation board or in sockets
2. Based on design and device characterization

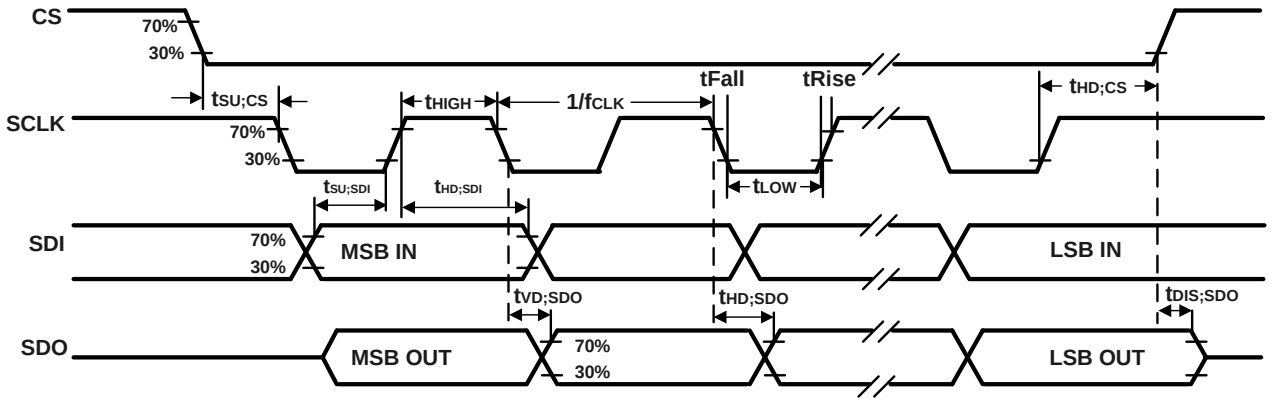

Figure 2. 4-Wire SPI Bus Timing Diagram

3.6 SPI TIMING CHARACTERIZATION – 3-WIRE SPI MODE

Typical Operating Circuit of section 4.2, VDD = 1.8 V, VDDIO = 1.8 V, T_A=25°C, unless otherwise noted.

PARAMETERS	CONDITIONS	MIN	TYP	MAX	UNITS	NOTES
SPI TIMING						
f_{SPC}, SCLK Clock Frequency	Default			24	MHz	1
t_{LOW}, SCLK Low Period		17			ns	1
t_{HIGH}, SCLK High Period		17			ns	1
$t_{SU.CS}$, CS Setup Time		39			ns	1
$t_{HD.CS}$, CS Hold Time		5			ns	1
$t_{SU.SDIO}$, SDIO Input Setup Time		13			ns	1
$t_{HD.SDIO}$, SDIO Input Hold Time		8			ns	1
$t_{VD.SDIO}$, SDIO Output Valid Time	C_{load} = 20 pF			18.5	ns	1
$t_{HD.SDIO}$, SDIO Output Hold Time	C_{load} = 20 pF	3.5			ns	1
$t_{DIS.SDIO}$, SDIO Output Disable Time				28	ns	1
t_{Fall}, SCLK Fall Time				16	ns	2
t_{Rise}, SCLK Rise Time				16	ns	2

Table 7. 3-Wire SPI Timing Characteristics (24-MHz Operation)

Notes:

1. Based on characterization of 5 parts over temperature and voltage as mounted on evaluation board or in sockets
2. Based on design and device characterization

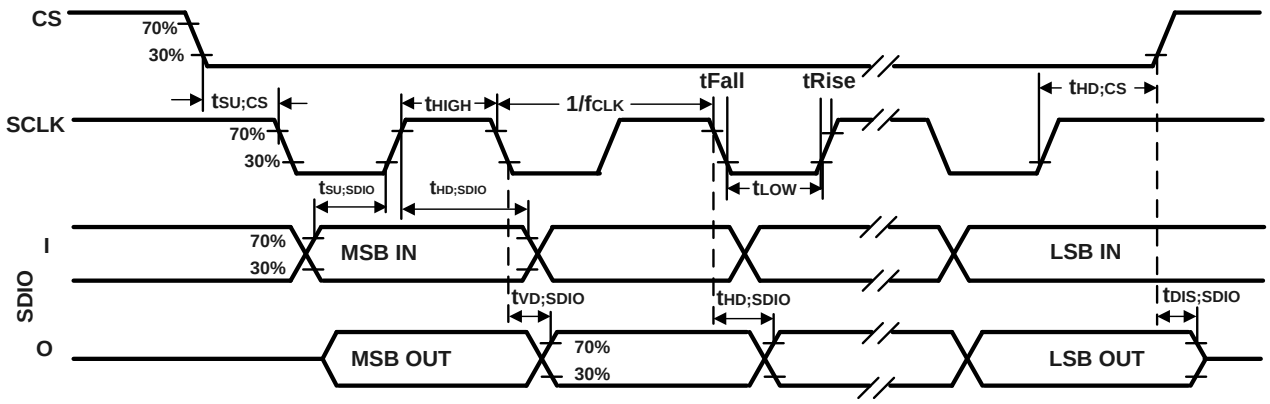

Figure 3. 3-Wire SPI Bus Timing Diagram

3.7 RTC (CLKIN) TIMING CHARACTERIZATION

Typical Operating Circuit of section 4.2, VDD = 1.8 V, VDDIO = 1.8 V, T_A=25°C, unless otherwise noted.

PARAMETERS	CONDITIONS	MIN	TYP	MAX	UNITS	NOTES
RTC (CLKIN) TIMING						
F_{RTC}, RTC Clock Frequency	Default	31	32	50	kHz	
$t_{HIGHRTC}$, RTC Clock High Period		1			µs	
$t_{RiseRTC}$, RTC Clock Rise Time		5		500	ns	
$t_{FallRTC}$, RTC Clock Fall Time		5		500	ns	

Table 8. RTC Timing Characteristics

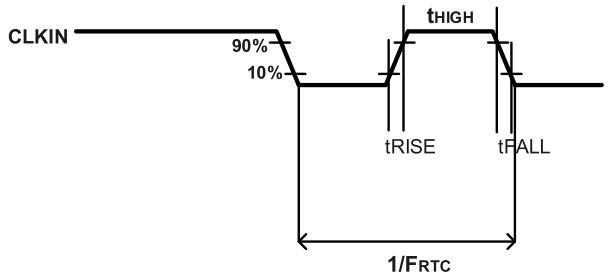

Figure 4. RTC Timing Diagram

3.8 ABSOLUTE MAXIMUM RATINGS

Stress above those listed as "Absolute Maximum Ratings" may cause permanent damage to the device. These are stress ratings only and functional operation of the device at these conditions is not implied. Exposure to the absolute maximum ratings conditions for extended periods may affect device reliability.

Parameter	Rating
Supply Voltage, VDD	-0.5 V to +4 V
Supply Voltage, VDDIO	-0.5 V to +4 V
Input Voltage Level (FSYNC, SCL, SDA)	-0.5 V to VDDIO + 0.5 V
Acceleration (Any Axis, unpowered)	20,000g for 0.2 ms
Operating Temperature Range	-40°C to +85°C
Storage Temperature Range	-40°C to +125°C
Electrostatic Discharge (ESD) Protection	2 kV (HBM); 500 V (CDM)
Latch-up	JEDEC Class II (2),125°C ±100 mA

Table 9. Absolute Maximum Ratings

4 APPLICATIONS INFORMATION

4.1 PIN OUT DIAGRAM AND SIGNAL DESCRIPTION

Pin Number	Pin Name	Pin Description
1	AP_SDO / AP_AD0	AP_SDO: AP SPI serial data output (4-wire mode); AP_AD0: AP I3C^{SM} / I^{2}C slave address LSB
2	RESV	No Connect or Connect to GND
3	RESV	No Connect or Connect to GND
4	INT1 / INT	INT1: Interrupt 1 (Note: INT1 can be push-pull or open drain) INT: All interrupts mapped to pin 4
5	VDDIO	IO power supply voltage
6	GND	Power supply ground
7	RESV	Connect to GND
8	VDD	Power supply voltage
9	INT2 / FSYNC / CLKIN	INT2: Interrupt 2 (Note: INT2 can be push-pull or open drain) FSYNC: Frame sync input; Connect to GND if FSYNC not used CLKIN: External clock input
10	RESV	No Connect or Connect to GND
11	RESV	No Connect or Connect to GND
12	AP_CS	AP SPI Chip select (AP SPI interface); Connect to VDDIO if using AP I3C^{SM} / I^{2}C interface
13	AP_SCL / AP_SCLK	AP_SCL: AP I3C^{SM} / I^{2}C serial clock; AP_SCLK: AP SPI serial clock
14	AP_SDA / AP_SDIO / AP_SDI	AP_SDA: AP I3C^{SM} / I^{2}C serial data; AP_SDIO: AP SPI serial data I/O (3-wire mode); AP_SDI: AP SPI serial data input (4-wire mode)

Table 10. Signal Descriptions

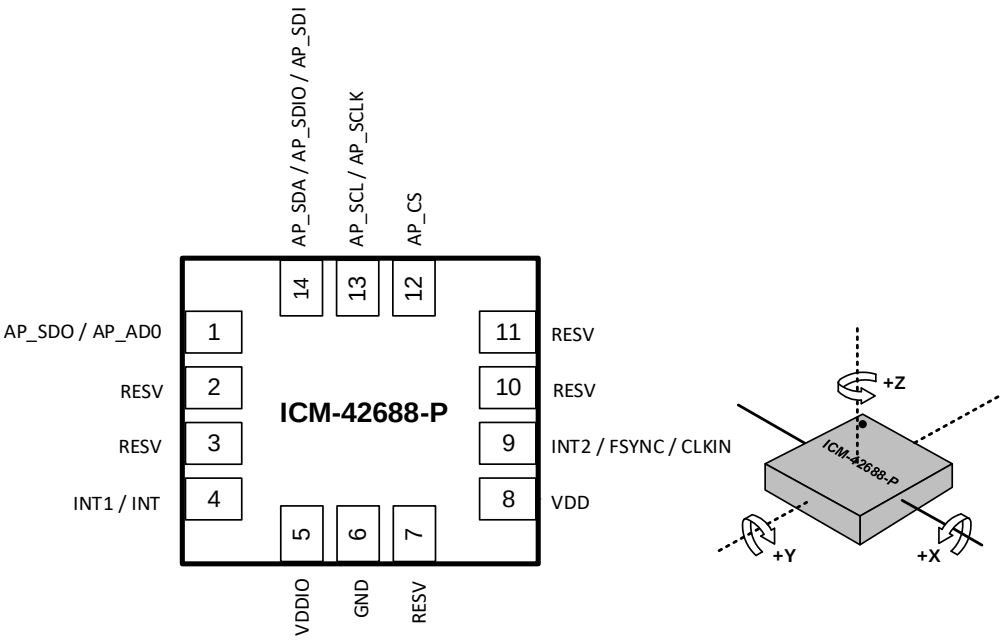

Figure 5. Pin Out Diagram for ICM-42688-P 2.5x3.0x0.91 mm LGA

4.2 TYPICAL OPERATING CIRCUIT

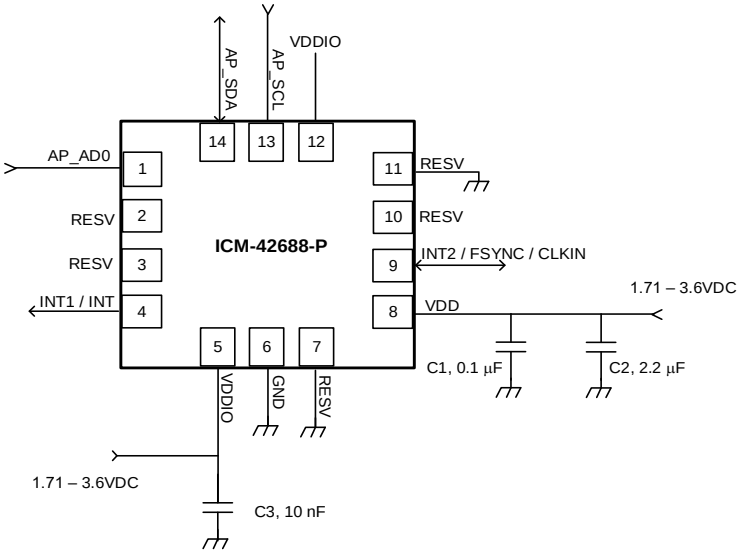

Figure 6. ICM-42688-P Application Schematic (I3C^{SM} / I^{2}C Interface to Host)

Note: I^{2}C lines are open drain and pull-up resistors (e.g. 10 kΩ) are required.

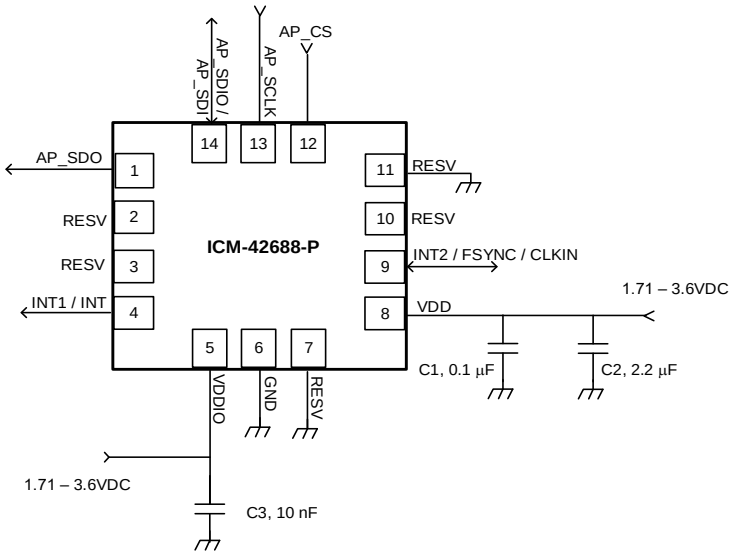

Figure 7. ICM-42688-P Application Schematic (SPI Interface to Host)

4.3 BILL OF MATERIALS FOR EXTERNAL COMPONENTS

Component	Label	Specification	Quantity
VDD Bypass Capacitors	C1 C2	X7R, 0.1µF ±10% X7R, 2.2µF ±10%	1 1
VDDIO Bypass Capacitor	C3	X7R, 10nF ±10%	1

Table 11. Bill of Materials

4.4 SYSTEM BLOCK DIAGRAM

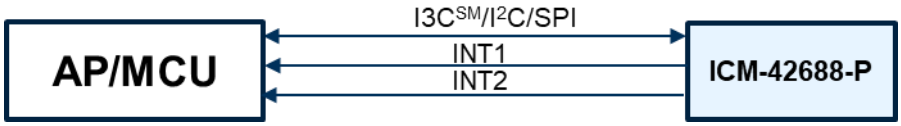

Figure 8. ICM-42688-P System Block Diagram

Note: The above block diagram is an example. Please refer to the pin-out (section 4.1) for other configuration options.

4.5 OVERVIEW

The ICM-42688-P is comprised of the following key blocks and functions:

- Three-axis MEMS rate gyroscope sensor with 16-bit ADCs and signal conditioning
  - 20-bits data format support in FIFO for high-data resolution (see section 6 for details)
- Three-axis MEMS accelerometer sensor with 16-bit ADCs and signal conditioning
  - 20-bits data format support in FIFO for high-data resolution (see section 6 for details)
- I3C^{SM}, I^{2}C and SPI serial communications interfaces
- Self-Test
- Clocking
- Sensor Data Registers
- FIFO
- Interrupts
- Digital-Output Temperature Sensor
- Bias and LDOs
- Charge Pump
- Standard Power Modes

4.6 THREE-AXIS MEMS GYROSCOPE WITH 16-BIT ADCS AND SIGNAL CONDITIONING

The ICM-42688-P includes a vibratory MEMS rate gyroscope, which detects rotation about the X-, Y-, and Z- Axes. When the gyroscope is rotated about any of the sense axes, the Coriolis Effect causes a vibration that is detected by a capacitive pickoff. The resulting signal is amplified, demodulated, and filtered to produce a voltage that is proportional to the angular rate. This voltage is digitized using on-chip Analog-to-Digital Converters (ADCs) to sample each axis. The full-scale range of the gyro sensors may be digitally programmed to ±15.625, ±31.25, ±62.5, ±125, ±250, ±500, ±1000, and ±2000 degrees per second (dps).

4.7 THREE-AXIS MEMS ACCELEROMETER WITH 16-BIT ADCS AND SIGNAL CONDITIONING

The ICM-42688-P includes a 3-Axis MEMS accelerometer. Acceleration along a particular axis induces displacement of a proof mass in the MEMS structure, and capacitive sensors detect the displacement. The ICM-42688-P architecture reduces the accelerometers' susceptibility to fabrication variations as well as to thermal drift. When the device is placed on a flat surface, it will measure 0*g* on the X- and Y-axes and +1*g* on the Z-axis. The accelerometers' scale factor is calibrated at the factory and is nominally independent of supply voltage. The full-scale range of the digital output can be adjusted to ±2*g*, ±4*g*, ±8*g* and ±16*g*.

4.8 I3C^{SM}, I^{2}C AND SPI HOST INTERFACE

The ICM-42688-P communicates to the application processor using an I3C^{SM}, I^{2}C, or SPI serial interface. The ICM-42688-P always acts as a slave when communicating to the application processor.

4.9 SELF-TEST

Self-test allows for the testing of the mechanical and electrical portions of the sensors. The self-test for each measurement axis can be activated by means of the gyroscope and accelerometer self-test registers.

When the self-test is activated, the electronics cause the sensors to be actuated and produce an output signal. The output signal is used to observe the self-test response.

The self-test response is defined as follows:

Self-test response = Sensor output with self-test enabled – Sensor output with self-test disabled

When the value of the self-test response is within the specified min/max limits of the product specification, the part has passed self-test. When the self-test response exceeds the min/max values, the part is deemed to have failed self-test.

4.10 CLOCKING

The ICM-42688-P has a flexible clocking scheme, allowing external or internal clock sources to be used for the internal synchronous circuitry. This synchronous circuitry includes the signal conditioning and ADCs, and various control circuits and registers.

The CLKIN pin on ICM-42688-P provides the ability to input an external clock. A highly accurate external clock may be used rather than the internal clocks sources, if greater clock accuracy is desired. External clock input supports highly accurate clock input from 31kHz to 50kHz, resulting in improvement of the following:

a) ODR uncertainty due to process, temperature, operating mode (PLL vs. RCOSC), and design limitations. This uncertainty can be as high as ±8% in RCOSC mode and ±1% in PLL mode. The CLKIN, assuming a 50ppm or better 32.768kHz source, will improve the ODR accuracy from ±80,000ppm to ±50ppm in RCOSC mode, or from ±10,000ppm to ±50ppm in PLL mode.
b) System level sensitivity error. Any clock uncertainty directly impacts gyroscope sensitivity at the system level. Sophisticated systems can estimate ODR inaccuracy to some extent, but not to the extent improved by using CLKIN.
c) System-level clock/sensor synchronization. When using CLKIN, the accelerometer and gyroscope are on the same clock as the host. There is no need to continually re-synchronize the sensor data as the sensor sample points and period are known to be in exact alignment with the common system clock.
d) CLKIN helps EIS (Electronic Image Stabilization) performance by providing:
    - Very accurate gyroscope sample points for use during integration to find true angular displacement.
    - Automatic time alignment between the motion sensor and the host and potentially the camera system.
e) Other applications that benefit from CLKIN include navigation, gaming, robotics.

Allowable internal sources for generating the internal clock are:

a) An internal relaxation oscillator
b) Auto-select between internal relaxation oscillator and gyroscope MEMS oscillator to use the best available source

For internal sources, the only setting supporting specified performance in all modes is option b). It is recommended that option b) be used when using internal clock source.

4.11 SENSOR DATA REGISTERS

The sensor data registers contain the latest gyroscope, accelerometer, and temperature measurement data. They are read-only registers, and are accessed via the serial interface. Data from these registers may be read anytime.

4.12 INTERRUPTS

Interrupt functionality is configured via the Interrupt Configuration register. Items that are configurable include the interrupt pins configuration, the interrupt latching and clearing method, and triggers for the interrupt. Items that can trigger an interrupt are (1) Clock generator locked to new reference oscillator (used when switching clock sources); (2) new data is available to be read (from the FIFO and Data registers); (3) accelerometer event interrupts; (4) FIFO watermark; (5) FIFO overflow. The interrupt status can be read from the Interrupt Status register.

4.13 DIGITAL-OUTPUT TEMPERATURE SENSOR

An on-chip temperature sensor and ADC are used to measure the ICM-42688-P die temperature. The readings from the ADC can be read from the FIFO or the Sensor Data registers.

Temperature sensor register data TEMP_DATA is updated with new data at max(Accelerometer ODR, Gyroscope ODR).

Temperature data value from the sensor data registers can be converted to degrees centigrade by using the following formula:

Temperature in Degrees Centigrade = (TEMP_DATA / 132.48) + 25

Temperature data stored in FIFO is an 8-bit quantity, FIFO_TEMP_DATA. It can be converted to degrees centigrade by using the following formula:

Temperature in Degrees Centigrade = (FIFO_TEMP_DATA / 2.07) + 25

4.14 BIAS AND LDOS

The bias and LDO section generates the internal supply and the reference voltages and currents required by the ICM-42688-P.

4.15 CHARGE PUMP

An on-chip charge pump generates the high voltage required for the MEMS oscillator.

4.16 STANDARD POWER MODES

The following table lists the user-accessible power modes for ICM-42688-P.

Mode	Name	Gyro	Accel
1	Sleep Mode	Off	Off
2	Standby Mode	Drive On	Off
3	Accelerometer Low-Power Mode	Off	Duty-Cycled
4	Accelerometer Low-Noise Mode	Off	On
5	Gyroscope Low-Noise Mode	On	Off
6	6-Axis Low-Noise Mode	On	On

Table 12. Standard Power Modes for ICM-42688-P

5 SIGNAL PATH

The following figure shows a block diagram of the signal path for ICM-42688-P.

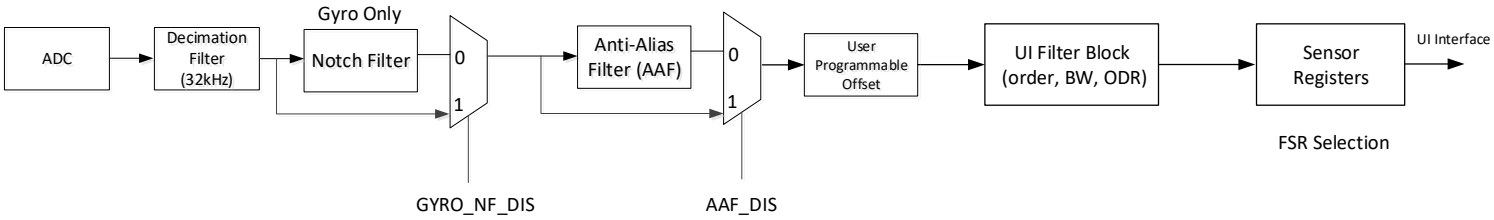

Figure 9. ICM-42688-P Signal Path

The signal path starts with ADCs for the gyroscope and accelerometer. Other components of the signal path are described below in further detail.

5.1 SUMMARY OF PARAMETERS USED TO CONFIGURE THE SIGNAL PATH

The following table shows the parameters that can control the signal path.

Parameter Name	Description
GYRO_AAF_DIS	Disables the Gyroscope Anti Alias Filter (AAF)
GYRO_AAF_DELT GYRO_AAF_DELTSQR GYRO_AAF_BITSHIFT	Three parameters required to program the gyroscope AAF. This is a 2nd order filter with programmable low pass filter. This is a user programmable filter which can be used to select the desired BW. This filter allows trading off RMS noise vs. latency for a given ODR.
ACCEL_AAF_DIS	Disables the Accelerometer Anti Alias Filter
ACCEL_AAF_DEL ACCEL_AAF_DELTSQR ACCEL_AAF_BITSHIFT	Three parameters required to program the accelerometer AAF. This is a 2nd order filter with programmable low pass filter. This is a user programmable filter which can be used to select the desired BW. This filter allows trading off RMS noise vs. latency for a given ODR.
GYRO_NF_DIS	Disables the gyro Notch Filter
GYRO_X/Y/Z_NF_COSWZ GYRO_X/Y/Z_NF_COSWZ_SEL	Factory trimmed parameters, designed to position a Notch at or near the sense peak frequency of Gyro. This allows the user to suppress only sense peak contribution to noise, while still maintaining a low latency high BW/ODR interface from the Sensor. This filter is available only in Gyro, and the parameters for X, Y, and Z are chosen independently.
GYRO_NF_BW_SEL	Factory trimmed parameter to cancel noise created by sense peak from Gyro. This parameter is common to all three axes

5.2 NOTCH FILTER

The Notch Filter is supported only for the gyroscope signal path. The following steps can be used to program the notch filter. Note that the notch filter is specific to each axis in the gyroscope, so the X, Y and Z axis can be programmed independently.

Frequency of Notch Filter (each axis)

To operate the Notch filter, two parameters NF_COSWZ, and NF_COSWZ_SEL must be programmed for each gyroscope axis.

Parameters NF_COSWZ are defined for each axis of the gyroscope as GYRO_X_NF_COSWZ (register bank 1, register 0x0Fh & register 0x12h), GYRO_Y_NF_COSWZ (register bank 1, register 0x10h & register 0x12h), GYRO_Z_NF_COSWZ (register bank 1, register 0x11h & register 0x12h). Note that the parameters have 9-bit values across two different registers.

Parameters NF_COSWZ_SEL are defined for each axis of the gyroscope as GYRO_X_NF_COSWZ_SEL (register bank 1, register 0x12h, bit 3), GYRO_Y_NF_COSWZ_SEL (register bank 1, register 0x12h, bit 4), GYRO_Z_NF_COSWZ_SEL (register bank 1, register 0x12h, bit 5).

Each value must be calculated using the steps described below, and programmed into the corresponding register locations mentioned above.

fdesired is the desired frequency of the Notch Filter in kHz. The lower bound for fdesired is 1kHz, and the upper bound is 3kHz. Operating the notch filter outside this range is not supported.

Step1: COSWZ = cos(2*pi*fdesired/32)
Step2:

```
If abs(COSWZ)≤0.875
        NF_COSWZ = round[COSWZ*256]
        NF_COSWZ_SEL = 0
else
        NF_COSWZ_SEL = 1
        if COSWZ > 0.875
                NF_COSWZ = round [8*(1-COSWZ)*256]
        else if COSWZ < -0.875
                NF_COSWZ = round [-8*(1+COSWZ)*256]
        end
End
```

Bandwidth of Notch Filter (common to all axes)

The notch filter allows the user to control the width of the notch from eight possible values using a 3-bit parameter GYRO_NF_BW_SEL in register bank 1, register 0x13h, bits 6:4. This parameter is common to all three axes.

GYRO_NF_BW_SEL	Notch Filter Bandwidth (Hz)
0	1449
1	680
2	329
3	162
4	80
5	40
6	20
7	10

The notch filter can be selected or bypassed by using the parameter GYRO_NF_DIS in register bank 1, register 0x0Bh, bit 0 as shown below.

GYRO_NF_DIS	Function
0	Enable notch filter
1	Disable notch filter

5.3 ANTI-ALIAS FILTER

Anti-alias filters for gyroscope and accelerometer can be independently programmed to have bandwidths ranging from 42 Hz to 3979 Hz. To program the anti-alias filter for a required bandwidth, use the table below to map the bandwidth to register values as shown:

a. Register bank 2, register 0x03h, bits 6:1, ACCEL_AAF_DELT: Code from 1 to 63 that allows programming the bandwidth for accelerometer anti-alias filter
b. Register bank 2, register 0x04h, bits 7:0 and Bank 2, register 0x05h, bits 3:0, ACCEL_AAF_DELTSQR: Square of the delt value for accelerometer
c. Register bank 2, register 0x05h, bits 7:4, ACCEL_AAF_BITSHIFT: Bitshift value for accelerometer used in hardware implementation
d. Register bank 1, register 0x0Ch, bits 5:0, GYRO_AAF_DELT: Code from 1 to 63 that allows programming the bandwidth for gyroscope anti-alias filter
e. Register bank 1, register 0x0Dh, bits 7:0 and Bank 1, register 0x0Eh, bits 3:0, GYRO_AAF_DELTSQR: Square of the delt value for gyroscope
f. Register bank 1, register 0x0Eh, bits 7:4, GYRO_AAF_BITSHIFT: Bitshift value for gyroscope used in hardware implementation

3dB Bandwidth (Hz)	ACCEL_AAF_DELT; GYRO_AAF_DELT	ACCEL_AAF_DELTSQR; GYRO_AAF_DELTSQR	ACCEL_AAF_BITSHIFT; GYRO_AAF_BITSHIFT
42	1	1	15
84	2	4	13
126	3	9	12
170	4	16	11
213	5	25	10
258	6	36	10
303	7	49	9
348	8	64	9
394	9	81	9
441	10	100	8
488	11	122	8
536	12	144	8
585	13	170	8
634	14	196	7
684	15	224	7
734	16	256	7
785	17	288	7
837	18	324	7
890	19	360	6
943	20	400	6
997	21	440	6
1051	22	488	6
1107	23	528	6
1163	24	576	6
1220	25	624	6
1277	26	680	6
1336	27	736	5

1395	28	784	5
1454	29	848	5
1515	30	896	5
1577	31	960	5
1639	32	1024	5
1702	33	1088	5
1766	34	1152	5
1830	35	1232	5
1896	36	1296	5
1962	37	1376	4
2029	38	1440	4
2097	39	1536	4
2166	40	1600	4
2235	41	1696	4
2306	42	1760	4
2377	43	1856	4
2449	44	1952	4
2522	45	2016	4
2596	46	2112	4
2671	47	2208	4
2746	48	2304	4
2823	49	2400	4
2900	50	2496	4
2978	51	2592	4
3057	52	2720	4
3137	53	2816	3
3217	54	2944	3
3299	55	3008	3
3381	56	3136	3
3464	57	3264	3
3548	58	3392	3
3633	59	3456	3
3718	60	3584	3
3805	61	3712	3
3892	62	3840	3
3979	63	3968	3

The anti-alias filter can be selected or bypassed for the gyroscope by using the parameter GYRO_AAF_DIS in register bank 1, register 0x0Bh, bit 1 as shown below.

GYRO_AAF_DIS	Function
0	Enable gyroscope anti-aliasing filter
1	Disable gyroscope anti-aliasing filter

The anti-alias filter can be selected or bypassed for the accelerometer by using the parameter ACCEL_AAF_DIS in register bank 2, register 0x03h, bit 0 as shown below.

ACCEL_AAF_DIS	Function
0	Enable accelerometer anti-aliasing filter
1	Disable accelerometer anti-aliasing filter

5.4 USER PROGRAMMABLE OFFSET

Gyroscope and accelerometer offsets can be programmed by the user by using registers OFFSET_USER0, through OFFSET_USER8, in bank 0, registers 0x77h through 0x7Fh (bank 4) as shown below.

Register Address	Register Name	Bits	Function
0x77h	OFFSET_USER0	7:0	Lower bits of X-gyro offset programmed by user. Max value is ±64 dps, resolution is 1/32 dps.
0x78h	OFFSET_USER1	3:0	Upper bits of X-gyro offset programmed by user. Max value is ±64 dps, resolution is 1/32 dps.
		7:4	Upper bits of Y-gyro offset programmed by user. Max value is ±64 dps, resolution is 1/32 dps.
0x79h	OFFSET_USER2	7:0	Lower bits of Y-gyro offset programmed by user. Max value is ±64 dps, resolution is 1/32 dps.
0x7Ah	OFFSET_USER3	7:0	Lower bits of Z-gyro offset programmed by user. Max value is ±64 dps, resolution is 1/32 dps.
0x7Bh	OFFSET_USER4	3:0	Upper bits of Z-gyro offset programmed by user. Max value is ±64 dps, resolution is 1/32 dps.
		7:4	Upper bits of X-accel offset programmed by user. Max value is ±1 g, resolution is 0.5 g.
0x7Ch	OFFSET_USER5	7:0	Lower bits of X-accel offset programmed by user. Max value is ±1 g, resolution is 0.5 g.
0x7Dh	OFFSET_USER6	7:0	Lower bits of Y-accel offset programmed by user. Max value is ±1 g, resolution is 0.5 g.
0x7Eh	OFFSET_USER7	3:0	Upper bits of Y-accel offset programmed by user. Max value is ±1 g, resolution is 0.5 g.
		7:4	Upper bits of Z-accel offset programmed by user. Max value is ±1 g, resolution is 0.5 g.
0x7Fh	OFFSET_USER8	7:0	Lower bits of Z-accel offset programmed by user. Max value is ±1 g, resolution is 0.5 g.

5.5 UI FILTER BLOCK

The UI filter block can be programmed to select filter order and bandwidth independently for gyroscope and accelerometer.

Gyroscope filter order can be selected by programming the parameter GYRO_UI_FILT_ORD in register bank 0, register 0x51h, bits 3:2, as shown below.

GYRO_UI_FILT_ORD	Filter Order
00	1st order
01	2nd order
10	3rd order
11	Reserved

Accelerometer filter order can be selected by programming the parameter ACCEL_UI_FILT_ORD in register bank 0, register 0x53h, bits 4:3, as shown below.

ACCEL_UI_FILT_ORD	Filter Order
00	1st order
01	2nd order
10	3rd order
11	Reserved

Gyroscope and accelerometer filter 3dB bandwidth can be selected by programming the parameter GYRO_UI_FILT_BW in register bank 0, register 0x52h, bits 3:0, and the parameter ACCEL_UI_FILT_BW in register bank 0, register 0x52h, bits 7:4, as shown below. The values shown in bold correspond to low noise and the values shown in italics correspond to low latency. User can select the appropriate setting based on the application requirements for power and latency. Corresponding Noise Bandwidth (NBW) and Group Delay values are also shown.

1st Order Filter 3dB Bandwidth, Noise Bandwidth (NBW), Group Delay

	3dB Bandwidth (Hz) for GYRO/ACCEL_UI_FILT_ORD=0 (1st order filter)										
		GYRO/ACCEL_UI_FILT_BW									
GYRO/ACCEL_ODR	ODR(Hz)	0	1	2	3	4	5	6	7	14	15
1	32000	*8400.0*									
2	16000	*4194.1*									
3	8000	*2096.3*									
4	4000	*1048.1*									
5	2000	*524.0*									
6	1000	**498.3**	**227.2**	**188.9**	**111.0**	**92.4**	**59.6**	**48.8**	**23.9**	**262.0**	*2096.3*
15	500	**249.1**	**113.6**	**94.4**	**55.5**	**46.2**	**29.8**	**24.4**	**11.9**	**131.0**	*1048.1*
7	200	**99.6**	**90.9**	**75.5**	**44.4**	**37.0**	**23.8**	**19.5**	**9.6**	*104.8*	*419.2*
8	100	**49.8**	*90.9*	*75.5*	**44.4**	**37.0**	**23.8**	**19.5**	**9.6**	*104.8*	*209.6*
9	50	**24.9**	*90.9*	*75.5*	*44.4*	*37.0*	**23.8**	**19.5**	**9.6**	*104.8*	*104.8*
10	25	**12.5**	*90.9*	*75.5*	*44.4*	*37.0*	*23.8*	*19.5*	**9.6**	*104.8*	*52.4*
11	12.5	*12.5*	*90.9*	*75.5*	*44.4*	*37.0*	*23.8*	*19.5*	*9.6*	*104.8*	*52.4*

	NBW Bandwidth (Hz) for GYRO/ACCEL_UI_FILT_ORD=0 (1st order filter)										
		GYRO/ACCEL_UI_FILT_BW									
GYRO/ACCEL_ODR	ODR(Hz)	0	1	2	3	4	5	6	7	14	15
1	32000	*8831.7*									
2	16000	*4410.6*									
3	8000	*2204.6*									

4	4000	*1102.2*									
5	2000	*551.1*									
6	1000	**551.1**	**230.8**	**196.3**	**126.5**	**108.9**	**75.8**	**64.1**	**34.1**	**275.6**	*2204.6*
15	500	**280.5**	**115.4**	**98.2**	**63.3**	**54.5**	**37.9**	**32.1**	**17.1**	**137.8**	*1102.2*
7	200	**112.2**	**92.4**	**78.5**	**50.6**	**43.6**	**30.3**	**25.7**	**13.7**	*110.3*	*440.9*
8	100	**56.1**	*92.4*	*78.5*	**50.6**	**43.6**	**30.3**	**25.7**	**13.7**	*110.3*	*220.5*
9	50	**28.1**	*92.4*	*78.5*	*50.6*	*43.6*	**30.3**	**25.7**	**13.7**	*110.3*	*110.3*
10	25	**14.1**	*92.4*	*78.5*	*50.6*	*43.6*	*30.3*	*25.7*	**13.7**	*110.3*	*55.2*
11	12.5	*14.1*	*92.4*	*78.5*	*50.6*	*43.6*	*30.3*	*25.7*	*13.7*	*110.3*	*55.2*

	Group Delay @DC (ms) for GYRO/ACCEL_UI_FILT_ORD=0 (1st order filter)										
		GYRO/ACCEL_UI_FILT_BW									
GYRO/ACCEL_ODR	ODR(Hz)	0	1	2	3	4	5	6	7	14	15
1	32000	*0.1*									
2	16000	*0.1*									
3	8000	*0.2*									
4	4000	*0.4*									
5	2000	*0.8*									
6	1000	**0.6**	**1.8**	**2.0**	**2.8**	**3.1**	**4.1**	**4.7**	**8.1**	**1.5**	*0.2*
15	500	**1.1**	**3.6**	**4.0**	**5.5**	**6.1**	**8.1**	**9.3**	**16.2**	**3.0**	*0.4*
7	200	**2.7**	**4.4**	**5.0**	**6.8**	**7.6**	**10.2**	**11.7**	**20.3**	*3.8*	*1.0*
8	100	**5.3**	*4.4*	*5.0*	**6.8**	**7.6**	**10.2**	**11.7**	**20.3**	*3.8*	*1.9*
9	50	**10.5**	*4.4*	*5.0*	*6.8*	*7.6*	**10.2**	**11.7**	**20.3**	*3.8*	*3.8*
10	25	**21.0**	*4.4*	*5.0*	*6.8*	*7.6*	*10.2*	*11.7*	**20.3**	*3.8*	*7.5*
11	12.5	*21.0*	*4.4*	*5.0*	*6.8*	*7.6*	*10.2*	*11.7*	*20.3*	*3.8*	*7.5*

2nd Order Filter 3dB Bandwidth, Noise Bandwidth (NBW), Group Delay

	3dB Bandwidth (Hz) for GYRO/ACCEL_UI_FILT_ORD=1 (2nd order filter)										
		GYRO/ACCEL_UI_FILT_BW									
GYRO/ACCEL_ODR	ODR(Hz)	0	1	2	3	4	5	6	7	14	15
1	32000	*8400.0*									
2	16000	*4194.1*									
3	8000	*2096.3*									
4	4000	*1048.1*									
5	2000	*524.0*									
6	1000	**493.3**	**230.7**	**191.6**	**117.5**	**97.1**	**59.6**	**48.0**	**21.3**	**262.0**	*2096.3*
15	500	**246.7**	**115.3**	**95.8**	**58.8**	**48.5**	**29.8**	**24.0**	**10.6**	**131.0**	*1048.1*
7	200	**98.7**	**92.3**	**76.6**	**47.0**	**38.8**	**23.8**	**19.2**	**8.5**	*104.8*	*419.2*
8	100	**49.3**	*92.3*	*76.6*	**47.0**	**38.8**	**23.8**	**19.2**	**8.5**	*104.8*	*209.6*
9	50	**24.7**	*92.3*	*76.6*	*47.0*	*38.8*	**23.8**	**19.2**	**8.5**	*104.8*	*104.8*
10	25	**12.3**	*92.3*	*76.6*	*47.0*	*38.8*	*23.8*	*19.2*	**8.5**	*104.8*	*52.4*
11	12.5	*12.3*	*92.3*	*76.6*	*47.0*	*38.8*	*23.8*	*19.2*	*8.5*	*104.8*	*52.4*

	NBW Bandwidth (Hz) for GYRO/ACCEL_UI_FILT_ORD=1 (2nd order filter)										
		GYRO/ACCEL_UI_FILT_BW									
GYRO/ACCEL_ODR	ODR(Hz)	0	1	2	3	4	5	6	7	14	15
1	32000	*8831.7*									
2	16000	*4410.6*									
3	8000	*2204.6*									
4	4000	*1102.2*									
5	2000	*551.1*									
6	1000	**551.1**	**223.7**	**189.9**	**122.7**	**102.8**	**64.7**	**52.5**	**23.7**	**275.6**	*2204.6*
15	500	**259.6**	**111.9**	**95.0**	**61.4**	**51.4**	**32.4**	**26.3**	**11.9**	**137.8**	*1102.2*
7	200	**103.9**	**89.5**	**76.0**	**49.1**	**41.2**	**25.9**	**21.0**	**9.5**	*110.3*	*440.9*
8	100	**52.0**	*89.5*	*76.0*	**49.1**	**41.2**	**25.9**	**21.0**	**9.5**	*110.3*	*220.5*
9	50	**26.0**	*89.5*	*76.0*	*49.1*	*41.2*	**25.9**	**21.0**	**9.5**	*110.3*	*110.3*
10	25	**13.0**	*89.5*	*76.0*	*49.1*	*41.2*	*25.9*	*21.0*	**9.5**	*110.3*	*55.2*
11	12.5	*13.0*	*89.5*	*76.0*	*49.1*	*41.2*	*25.9*	*21.0*	*9.5*	*110.3*	*55.2*

	Group Delay @DC (ms) for GYRO/ACCEL_UI_FILT_ORD=1 (2nd order filter)										
		GYRO/ACCEL_UI_FILT_BW									
GYRO/ACCEL_ODR	ODR(Hz)	0	1	2	3	4	5	6	7	14	15
1	32000	*0.1*									
2	16000	*0.1*									
3	8000	*0.2*									
4	4000	*0.4*									
5	2000	*0.8*									
6	1000	**0.7**	**2.1**	**2.4**	**3.2**	**3.7**	**5.2**	**6.1**	**12.0**	**1.5**	*0.2*
15	500	**1.3**	**4.1**	**4.7**	**6.4**	**7.3**	**10.4**	**12.2**	**24.0**	**3.0**	*0.4*
7	200	**3.3**	**5.1**	**5.8**	**8.0**	**9.1**	**12.9**	**15.3**	**30.0**	*3.8*	*1.0*
8	100	**6.5**	*5.1*	*5.8*	**8.0**	**9.1**	**12.9**	**15.3**	**30.0**	*3.8*	*1.9*
9	50	**12.9**	*5.1*	*5.8*	*8.0*	*9.1*	**12.9**	**15.3**	**30.0**	*3.8*	*3.8*
10	25	**25.7**	*5.1*	*5.8*	*8.0*	*9.1*	*12.9*	*15.3*	**30.0**	*3.8*	*7.5*
11	12.5	*25.7*	*5.1*	*5.8*	*8.0*	*9.1*	*12.9*	*15.3*	*30.0*	*3.8*	*7.5*

3rd Order Filter 3dB Bandwidth, Noise Bandwidth (NBW), Group Delay

	3dB Bandwidth (Hz) for GYRO/ACCEL_UI_FILT_ORD=2 (3rd order filter)										
		GYRO/ACCEL_UI_FILT_BW									
GYRO/ACCEL_ODR	ODR(Hz)	0	1	2	3	4	5	6	7	14	15
1	32000	*8400.0*									
2	16000	*4194.1*									
3	8000	*2096.3*									
4	4000	*1048.1*									
5	2000	*524.0*									
6	1000	**492.9**	**234.7**	**195.8**	**118.9**	**97.9**	**60.8**	**46.8**	**25.2**	**262.0**	*2096.3*
15	500	**246.4**	**117.4**	**97.9**	**59.5**	**48.9**	**30.4**	**23.4**	**12.6**	**131.0**	*1048.1*
7	200	**98.6**	**93.9**	**78.3**	**47.6**	**39.2**	**24.3**	**18.7**	**10.1**	*104.8*	*419.2*

8	100	**49.3**	*93.9*	*78.3*	**47.6**	**39.2**	**24.3**	**18.7**	**10.1**	*104.8*	*209.6*
9	50	**24.6**	*93.9*	*78.3*	*47.6*	*39.2*	**24.3**	**18.7**	**10.1**	*104.8*	*104.8*
10	25	**12.3**	*93.9*	*78.3*	*47.6*	*39.2*	*24.3*	*18.7*	**10.1**	*104.8*	*52.4*
11	12.5	*12.3*	*93.9*	*78.3*	*47.6*	*39.2*	*24.3*	*18.7*	*10.1*	*104.8*	*52.4*

	NBW Bandwidth (Hz) for GYRO/ACCEL_UI_FILT_ORD=2 (3rd order filter)										
		GYRO/ACCEL_UI_FILT_BW									
GYRO/ACCEL_ODR	ODR(Hz)	0	1	2	3	4	5	6	7	14	15
1	32000	*8831.7*									
2	16000	*4410.6*									
3	8000	*2204.6*									
4	4000	*1102.2*									
5	2000	*551.1*									
6	1000	**551.1**	**221.3**	**188.5**	**120.1**	**100.0**	**62.9**	**48.6**	**26.4**	**275.6**	*2204.6*
15	500	**252.0**	**110.7**	**94.3**	**60.1**	**50.0**	**31.5**	**24.3**	**13.2**	**137.8**	*1102.2*
7	200	**100.8**	**88.6**	**75.4**	**48.1**	**40.0**	**25.2**	**19.5**	**10.6**	*110.3*	*440.9*
8	100	**50.4**	*88.6*	*75.4*	**48.1**	**40.0**	**25.2**	**19.5**	**10.6**	*110.3*	*220.5*
9	50	**25.2**	*88.6*	*75.4*	*48.1*	*40.0*	**25.2**	**19.5**	**10.6**	*110.3*	*110.3*
10	25	**12.6**	*88.6*	*75.4*	*48.1*	*40.0*	*25.2*	*19.5*	**10.6**	*110.3*	*55.2*
11	12.5	*12.6*	*88.6*	*75.4*	*48.1*	*40.0*	*25.2*	*19.5*	*10.6*	*110.3*	*55.2*

	Group Delay @DC (ms) for GYRO/ACCEL_UI_FILT_ORD=2 (3rd order filter)										
		GYRO/ACCEL_UI_FILT_BW									
GYRO/ACCEL_ODR	ODR(Hz)	0	1	2	3	4	5	6	7	14	15
1	32000	*0.1*									
2	16000	*0.1*									
3	8000	*0.2*									
4	4000	*0.4*									
5	2000	*0.8*									
6	1000	**0.8**	**2.3**	**2.7**	**4.0**	**4.6**	**6.6**	**8.2**	**14.1**	**1.5**	*0.2*
15	500	**1.6**	**4.6**	**5.4**	**7.9**	**9.2**	**13.2**	**16.3**	**28.1**	**3.0**	*0.4*
7	200	**4.0**	**5.8**	**6.8**	**9.8**	**11.4**	**16.5**	**20.4**	**35.2**	*3.8*	*1.0*
8	100	**8.0**	*5.8*	*6.8*	**9.8**	**11.4**	**16.5**	**20.4**	**35.2**	*3.8*	*1.9*
9	50	**15.9**	*5.8*	*6.8*	*9.8*	*11.4*	**16.5**	**20.4**	**35.2**	*3.8*	*3.8*
10	25	**31.8**	*5.8*	*6.8*	*9.8*	*11.4*	*16.5*	*20.4*	**35.2**	*3.8*	*7.5*
11	12.5	*31.8*	*5.8*	*6.8*	*9.8*	*11.4*	*16.5*	*20.4*	*35.2*	*3.8*	*7.5*

5.6 UI PATH ODR AND FSR SELECTION

Gyroscope ODR can be selected by programming the parameter GYRO_ODR in register bank 0, register 0x4Fh, bits 3:0 as shown below.

GYRO_ODR	Gyroscope ODR Value
0000	Reserved
0001	32kHz

0010	16kHz
0011	8kHz
0100	4kHz
0101	2kHz
0110	1kHz (default)
0111	200Hz
1000	100Hz
1001	50Hz
1010	25Hz
1011	12.5Hz
1100	Reserved
1101	Reserved
1110	Reserved
1111	500Hz

Gyroscope FSR can be selected by programming the parameter GYRO_UI_FS_SEL in register bank 0, register 0x4Fh, bits 7:5 as shown below.

GYRO_UI_FS_SEL	Gyroscope FSR Value
000	2000dps
001	1000dps
010	500dps
011	250dps
100	125dps
101	62.5dps
110	31.25dps
111	15.625dps

Accelerometer ODR can be selected by programming the parameter ACCEL_ODR in register bank 0, register 0x50h, bits 3:0 as shown below.

ACCEL_ODR	Accelerometer ODR Value
0000	Reserved
0001	32kHz (LN mode)
0010	16kHz (LN mode)
0011	8kHz (LN mode)
0100	4kHz (LN mode)
0101	2kHz (LN mode)
0110	1kHz (LN mode) (default)
0111	200Hz (LP or LN mode)
1000	100Hz (LP or LN mode)
1001	50Hz (LP or LN mode)
1010	25Hz (LP or LN mode)

1011	12.5Hz (LP or LN mode)
1100	6.25Hz (LP mode)
1101	3.125Hz (LP mode)
1110	1.5625Hz (LP mode)
1111	500Hz (LP or LN mode)

Accelerometer FSR can be selected by programming the parameter ACCEL_UI_FS_SEL in register bank 0, register 0x50h, bits 7:5 as shown below.

ACCEL_UI_FS_SEL	Accelerometer FSR Value
000	16g
001	8g
010	4g
011	2g
100	Reserved
101	Reserved
110	Reserved
111	Reserved

6 FIFO

The ICM-42688-P contains a 2K byte FIFO register that is accessible via the serial interface. The FIFO configuration register determines which data is written into the FIFO. Possible choices include gyroscope data, accelerometer data, temperature readings, and FSYNC input. A FIFO counter keeps track of how many bytes of valid data are contained in the FIFO.

6.1 PACKET STRUCTURE

The following figure shows the FIFO packet structures supported in ICM-42688-P. Base data format for gyroscope and accelerometer is 16-bits per element. 20-bits data format support is included in one of the packet structures. When 20-bits data format is used, gyroscope data consists of 19-bits of actual data and the LSB is always set to 0, accelerometer data consists of 18-bits of actual data and the two lowest order bits are always set to 0. When 20-bits data format is used, the only FSR settings that are operational are ±2000dps for gyroscope and ±16g for accelerometer, even if the FSR selection register settings are configured for other FSR values. The corresponding sensitivity scale factor values are 131 LSB/dps for gyroscope and 8192 LSB/g for accelerometer.

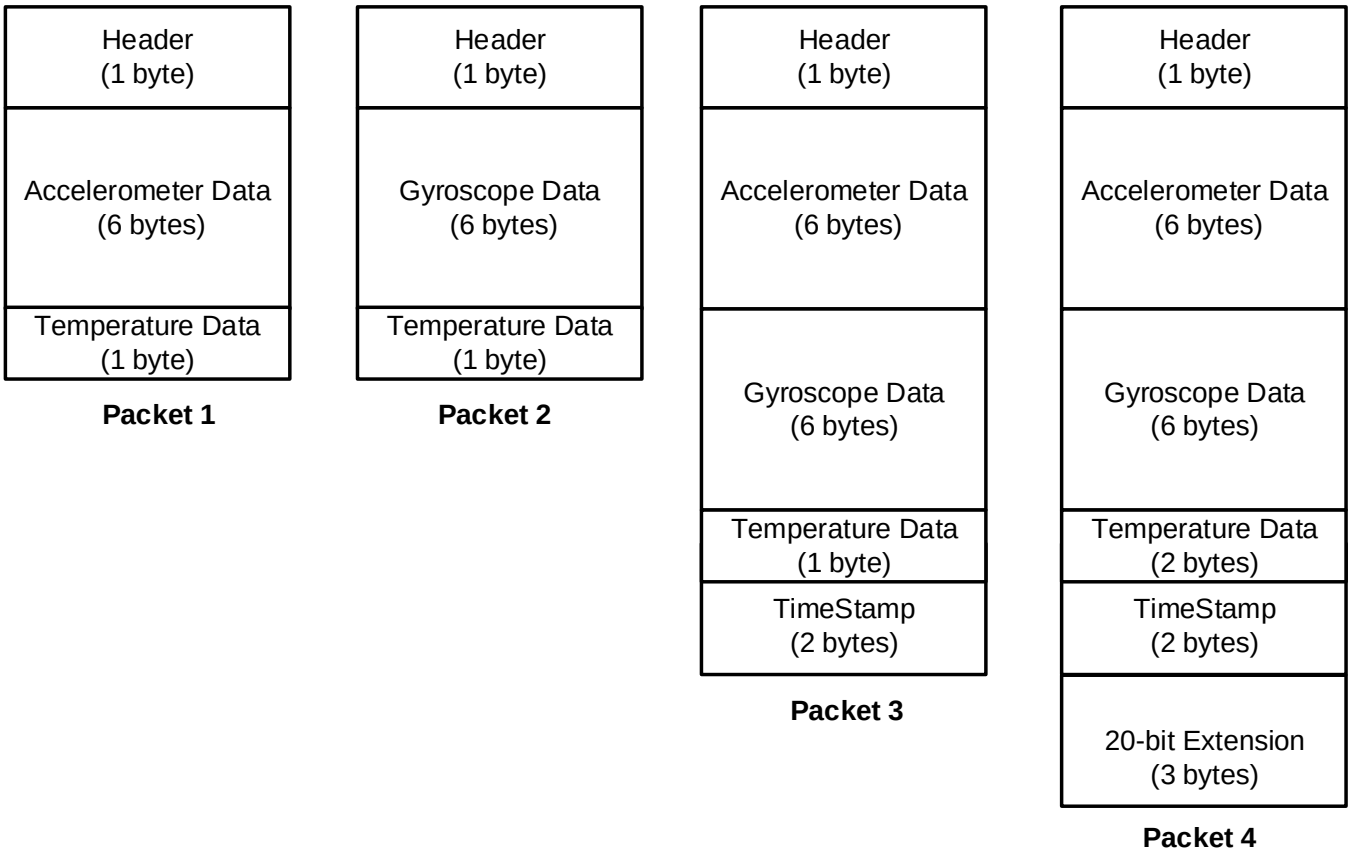

Figure 10. FIFO Packet Structure

The rest of this sub-section describes how individual data is packaged in the different FIFO packet structures.

Packet 1: Individual data is packaged in Packet 1 as shown below.

Byte	Content
0x00	FIFO Header
0x01	Accel X [15:8]
0x02	Accel X [7:0]
0x03	Accel Y [15:8]
0x04	Accel Y [7:0]
0x05	Accel Z [15:8]
0x06	Accel Z [7:0]
0x07	Temperature[7:0]

Packet 2: Individual data is packaged in Packet 2 as shown below.

Byte	Content
0x00	FIFO Header
0x01	Gyro X [15:8]
0x02	Gyro X [7:0]
0x03	Gyro Y [15:8]
0x04	Gyro Y [7:0]
0x05	Gyro Z [15:8]
0x06	Gyro Z [7:0]
0x07	Temperature[7:0]

Packet 3: Individual data is packaged in Packet 3 as shown below.

Byte	Content
0x00	FIFO Header
0x01	Accel X [15:8]
0x02	Accel X [7:0]
0x03	Accel Y [15:8]
0x04	Accel Y [7:0]
0x05	Accel Z [15:8]
0x06	Accel Z [7:0]
0x07	Gyro X [15:8]
0x08	Gyro X [7:0]
0x09	Gyro Y [15:8]
0x0A	Gyro Y [7:0]
0x0B	Gyro Z [15:8]
0x0C	Gyro Z [7:0]
0x0D	Temperature[7:0]
0x0E	TimeStamp[15:8]
0x0F	TimeStamp[7:0]

Packet 4: Individual data is packaged in Packet 4 as shown below.

Byte	Content	
0x00	FIFO Header	
0x01	Accel X [19:12]	
0x02	Accel X [11:4]	
0x03	Accel Y [19:12]	
0x04	Accel Y [11:4]	
0x05	Accel Z [19:12]	
0x06	Accel Z [11:4]	
0x07	Gyro X [19:12]	
0x08	Gyro X [11:4]	
0x09	Gyro Y [19:12]	
0x0A	Gyro Y [11:4]	
0x0B	Gyro Z [19:12]	
0x0C	Gyro Z [11:4]	
0x0D	Temperature[15:8]	
0x0E	Temperature[7:0]	
0x0F	TimeStamp[15:8]	
0x10	TimeStamp[7:0]	
0x11	Accel X [3:0]	Gyro X [3:0]
0x12	Accel Y [3:0]	Gyro Y [3:0]
0x13	Accel Z [3:0]	Gyro Z [3:0]

6.2 FIFO HEADER

The following table shows the structure of the 1byte FIFO header.

Bit Field	Item	Description
7	HEADER_MSG	1: FIFO is empty 0: Packet contains sensor data
6	HEADER_ACCEL	1: Packet is sized so that accel data have location in the packet, FIFO_ACCEL_EN must be 1 0: Packet does not contain accel sample
5	HEADER_GYRO	1: Packet is sized so that gyro data have location in the packet, FIFO_GYRO_EN must be 1 0: Packet does not contain gyro sample
4	HEADER_20	1 : Packet has a new and valid sample of extended 20-bit data for gyro and/or accel 0 : Packet does not contain a new and valid extended 20-bit data
3:2	HEADER_TIMESTAMP_FSYNC	00: Packet does not contain timestamp or FSYNC time data 01: Reserved 10: Packet contains ODR Timestamp 11: Packet contains FSYNC time, and this packet is flagged as first ODR after FSYNC (only if FIFO_TMST_FSYNC_EN is 1)
1	HEADER_ODR_ACCEL	1: The ODR for accel is different for this accel data packet compared to the previous accel packet 0: The ODR for accel is the same as the previous packet with accel
0	HEADER_ODR_GYRO	1: The ODR for gyro is different for this gyro data packet compared to the previous gyro packet 0: The ODR for gyro is the same as the previous packet with gyro

Note at least HEADER_ACCEL or HEADER_GYRO must be set for a sensor data packet to be set.

6.3 MAXIMUM FIFO STORAGE

The maximum number of packets that can be stored in FIFO is a variable quantity depending on the use case. As shown in the figure below, the physical FIFO size is 2048 bytes. A number of bytes equal to the packet size selected (see section 6.1) is reserved to prevent reading a packet during write operation. Additionally, a read cache 2 packets wide is available.

When there is no serial interface operation, the read cache is not available for storing packets, being fed by the serial interface clock.

When serial interface operation happens, depending on the operation length and the packet size chosen, either 1 or 2 of the packet entries in read cache may become available for storing packets. In that case the total storage available is up to the maximum number of packets that can be accommodated in 2048 (2040 in case of 20 bytes packets) bytes + 1 packet size, depending on the packet size used.

Due to the non-deterministic nature of system operation, driver memory allocation should always be the largest size of 2080 bytes.

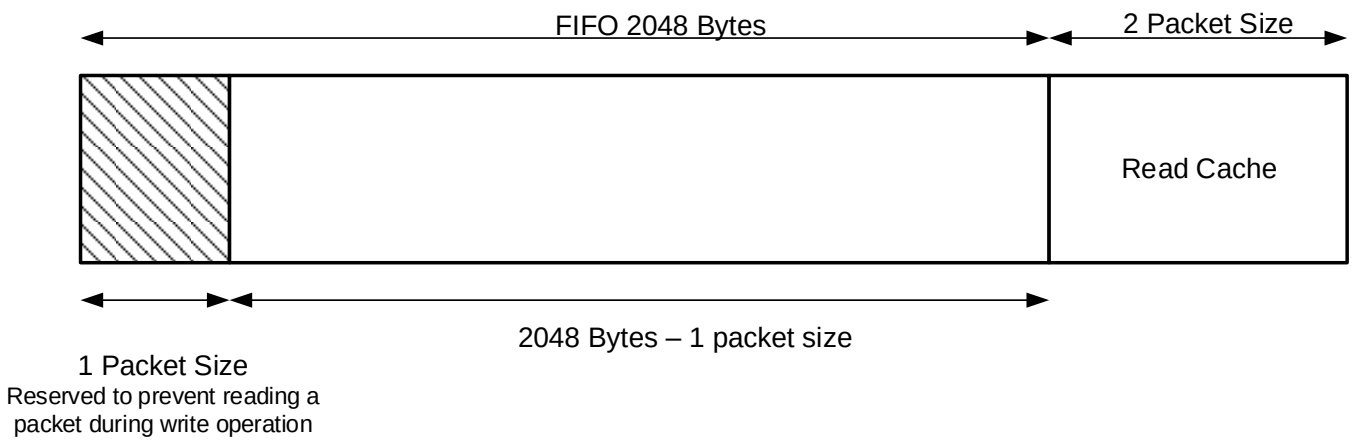

Figure 11. Maximum FIFO Storage

6.4 FIFO CONFIGURATION REGISTERS

The following control bits in bank 0, register 0x5Fh determine what data is placed into the FIFO. The values of these bits may change while the FIFO is being filled without corruption of the FIFO.

BIT	NAME	FUNCTION
4	FIFO_HIRES_EN	0: Default setting; Sensor data have regular resolution 1: Sensor data in FIFO will have extended resolution enabling the 20 Bytes packet with priority on other setting below
3	FIFO_TMST_FSYNC_EN	0: FIFO will only contain ODR timestamp information 1: FIFO can also contain FSYNC time and FSYNC flag for one ODR after an FSYNC event
1	FIFO_GYRO_EN	0: Default setting; Gyroscope data not placed into FIFO 1: Enables gyroscope data packets of 6-bytes to be placed in FIFO
0	FIFO_ACCEL_EN	0: Default setting; Accelerometer data not placed into FIFO 1: Enables accelerometer data packets of 6-bytes to be placed in FIFO

Configuration register settings above impact FIFO header and FIFO packet size as follows:

FIFO_HIRES_EN	FIFO_ACCEL_EN	FIFO_GYRO_EN	FIFO_TMST_ FSYNC_EN	Header	Packet size
1	X	X	0	8’b_0111_10xx	20 Bytes
1	X	X	1	8’b_0111_11xx	20 Bytes
0	1	1	0	8’b_0110_10xx	16 Bytes
0	1	1	1	8’b_0110_11xx	16 Bytes
0	1	0	X	8’b_0100_00xx	8 Bytes
0	0	1	X	8’b_0010_00xx	8 Bytes
0	0	0	X	No FIFO writes	No FIFO writes

7 PROGRAMMABLE INTERRUPTS

The ICM-42688-P has a programmable interrupt system that can generate an interrupt signal on the INT pins. Status flags indicate the source of an interrupt. Interrupt sources may be enabled and disabled individually. There are two interrupt outputs. Any interrupt may be mapped to either interrupt pin as explained in the register section. The following configuration options are available for the interrupts

- INT1 and INT2 can be push-pull or open drain
- Level or pulse mode
- Active high or active low

Additionally, ICM-42688-P includes In-band Interrupt (IBI) support for the I3C^{SM} interface.

8 APEX MOTION FUNCTIONS

The APEX (**A**dvanced **P**edometer and **E**vent Detection – ne**X**t gen) features ICM-42688-P consist of:

- Pedometer: Tracks Step count and issues a Step Detect Interrupt
- Tilt Detection: Issues an interrupt when the Tilt angle exceeds 35 degrees for more than a programmable time.
- Raise to Wake/Sleep: Gesture detection for wake and sleep events. Interrupt is issued when either of these two events are detected.
- Tap Detection: Issues an interrupt when Tap is detected, along with a register containing the Tap Count.
- Wake on Motion (WoM): Detects motion when accelerometer samples exceed a programmable threshold. This motion event can be used to enable chip operation from sleep mode.
- Significant Motion Detector (SMD): Detects motion if WoM events are detected during a programmable time window (2s or 4s).

8.1 APEX ODR SUPPORT

APEX algorithms are designed to work with the accelerometer, for a variety of ODR settings. However, there is a minimum ODR required for each algorithm. The following table shows the relationship between the available accelerometer ODRs and the operation of the APEX algorithms. In order to allow more flexible operation where we can control the ODR of the APEX algorithms independent of the accelerometer ODR, we allow for an additional selection determined by the field DMP_ODR. The tables below shows how DMP_ODR should be configured in relation to the accelerometer ODR and the expected performance.

Accel ODR	DMP_ODR	Tap Detection	Pedometer	Tilt Detection	Raise to Wake/Sleep
< 25Hz	X	Disabled	Disabled	Disabled	Disabled
≥ 25Hz	0 (25Hz)	Disabled	Low Power	Low Power	Enabled
≥ 50Hz	2 (50Hz)	Disabled	Normal	Normal	Enabled

Accel ODR	Tap Detection
200Hz	Low Power
500Hz	Normal
1kHz	High Performance
> 1kHz	Disabled

If the accelerometer ODR is set below the minimum DMP ODR (25 Hz), the APEX features cannot be enabled.

When the accelerometer ODR needs to be set differently from the DMP ODR, only the integer multiple of DMP ODR for accelerometer sensor ODR is suitable to use with DMP. For example, when the accelerometer ODR is set as 200 Hz, the APEX features can be enabled with choices of 25 Hz, or 50 Hz, depending on the DMP_ODR register setting.

DMP ODR should not be changed on the fly. The following sequence should be followed for changing the DMP ODR:

1. Disable Pedometer, and Tilt Detection if they are enabled
2. Change DMP ODR
3. Set DMP_INIT_EN for one cycle (Register 0x4Bh in Bank 0)
4. Unset DMP_INIT_EN (Register 0x4Bh in Bank 0)
5. Enable APEX features of interest

8.2 DMP POWER SAVE MODE

DMP Power Save Mode can be enabled or disabled by DMP_POWER_SAVE (Register 0x56h in Bank 0). When the DMP Power Save Mode is enabled, APEX features are enabled only when WOM is detected. WOM must be explicitly enabled for the DMP to work in this mode. When WOM is not detected the APEX features are on pause. If the user does not want to use DMP Power Save Mode they may set DMP_POWER_SAVE = 0, and use APEX functions without WOM detection.

8.3 PEDOMETER PROGRAMMING

- Pedometer configuration parameters
    1. LOW_ENERGY_AMP_TH_SEL (Register 0x40h in Bank 4)
    2. PED_AMP_TH_SEL (Register 0x41h in Bank 4)
    3. PED_STEP_CNT_TH_SEL (Register 0x41h in Bank 4)
    4. PED_HI_EN_TH_SEL (Register 0x42h in Bank 4)
    5. PED_SB_TIMER_TH_SEL (Register 0x42h in Bank 4)
    6. PED_STEP_DET_TH_SEL (Register 0x42h in Bank 4)
    7. SENSITIVITY_MODE (Register 0x48h in Bank 4)
    8. There are 2 ODR and 2 sensitivity modes

Accel ODR (DMP_ODR)	normal	slow walk
25 Hz (0)	low power	low power and slow walk
50 Hz (2)	high performance	slow walk

- Initialize Sensor in a typical configuration
    1. Set accelerometer ODR to 50 Hz (Register 0x50h in Bank 0)
    2. Set accelerometer to Low Power mode (Register 0x4Eh in Bank 0)
       ACCEL_MODE = 2 and (Register 0x4Eh in Bank 0), ACCEL_LP_CLK_SEL = 0, for low power mode
    3. Set DMP ODR = 50 Hz and turn on Pedometer feature (Register 0x56h in Bank 0)
    4. Wait 1 millisecond

- Initialize APEX hardware
    1. Set DMP_MEM_RESET_EN to 1 (Register 0x4Bh in Bank 0)
    2. Wait 1 millisecond
    3. Set LOW_ENERGY_AMP_TH_SEL to 10 (Register 0x40h in Bank 4)
    4. Set PED_AMP_TH_SEL to 8 (Register 0x41h in Bank 4)
    5. Set PED_STEP_CNT_TH_SEL to 5 (Register 0x41h in Bank 4)
    6. Set PED_HI_EN_TH_SEL to 1 (Register 0x42h in Bank 4)
    7. Set PED_SB_TIMER_TH_SEL to 4 (Register 0x42h in Bank 4)
    8. Set PED_STEP_DET_TH_SEL to 2 (Register 0x42h in Bank 4)
    9. Set SENSITIVITY_MODE to 0 (Register 0x48h in Bank 4)
    10. Set DMP_INIT_EN to 1 (Register 0x4Bh in Bank 0)
    11. Wait 50 milliseconds
    12. Enable STEP detection, source for INT1 by setting bit 5 in register INT_SOURCE6 (Register 0x4Dh in Bank 4) to 1. Or if INT2 is selected for STEP detection, enable STEP detection source by setting bit 5 in register INT_SOURCE7 (Register 0x4Eh in Bank 4) to 1.
    13. Turn on Pedometer feature by setting PED_ENABLE to 1 (Register 0x56h in Bank 0)

- Output registers
  1. Read interrupt register (Register 0x38h in Bank 0) for STEP_DET_INT
  2. If the step count is equal to or greater than 65535 (uint16), the STEP_CNT_OVF_INT (Register 0x38h in Bank 0) will be set to 1. Example:
     - Take 1 step =>output step count = 65533 (real step count is 65533)
     - Take 1 step => output step count = 65534 (real step count is 65534)
     - Take 1 step => output step count = 0 and interrupt is fired (real step count is 65535+0= 65535)
     - Take 1 step => output step count = 1 (real step count is 65535+1=65536)
  3. Read the step count in STEP_CNT (Register 0x31h and 0x32h in Bank 0)
  4. Read the step cadence in STEP_CADENCE (Register 0x33h in Bank 0)
  5. Read the activity class in ACTIVITY_CLASS (Register 0x34h in Bank 0)

8.4 TILT DETECTION PROGRAMMING

- Tilt Detection configuration parameters
  1. TILT_WAIT_TIME (Register 0x43h in Bank 4)
     This parameter configures how long of a delay after tilt is detected before interrupt is triggered
     Default is 2 (4 s).
     Range is 0 = 0 s, 1 = 2 s, 2 = 4 s, 3 = 6 s
     For example, setting TILT_WAIT_TIME = 2 is equivalent to 4 seconds for all ODRs

- Initialize Sensor in a typical configuration
  1. Set accelerometer ODR (Register 0x50h in Bank 0)
     ACCEL_ODR = 9 for 50 Hz or 10 for 25 Hz
  2. Set Accel to Low Power mode (Register 0x4Eh in Bank 0)
     ACCEL_MODE = 2 and (Register 0x4Dh in Bank 0), ACCEL_LP_CLK_SEL = 0, for low power mode
  3. Set DMP ODR (Register 0x56h in Bank 0)
     DMP_ODR = 0 for 25 Hz, 2 for 50 Hz
  4. Wait 1 millisecond

- Initialize APEX hardware
  1. Set DMP_MEM_RESET_EN to 1 (Register 0x4Bh in Bank 0)
  2. Wait 1 millisecond
  3. Set TILT_WAIT_TIME (Register 0x43h in Bank 4) if default value does not meet needs
  4. Wait 1 millisecond
  5. Set DMP_INIT_EN to 1 (Register 0x4Bh in Bank 0)
  6. Enable Tilt Detection, source for INT1 by setting bit 3 in register INT_SOURCE6 (Register 0x4Dh in Bank 4) to 1. Or if INT2 is selected for Tilt Detection, enable Tilt Detection source by setting bit 3 in register INT_SOURCE7 (Register 0x4Eh in Bank 4) to 1.
  7. Wait 50 milliseconds
  8. Turn on Tilt Detection feature by setting TILT_ENABLE to 1 (Register 0x56h in Bank 0)

- Output registers
  1. Read interrupt register (Register 0x38h in Bank 0) for TILT_DET_INT

8.5 RAISE TO WAKE/SLEEP PROGRAMMING

- Raise to Wake/Sleep configuration parameters
  1. SLEEP_TIME_OUT (Register 0x43h in Bank 4)
  2. MOUNTING_MATRIX (Register 0x44h in Bank 4)
  3. SLEEP_GESTURE_DELAY (Register 0x45h in Bank 4)

- Initialize Sensor in a typical configuration
  1. Set accelerometer ODR (Register 0x50h in Bank 0)
     ACCEL_ODR = 10 for 25 Hz

2. Set Accel to Low Power mode (Register 0x4Eh in Bank 0)
   ACCEL_MODE = 2 and (Register 0x4Dh in Bank 0), ACCEL_LP_CLK_SEL = 0, for low power mode
3. Set DMP ODR (Register 0x56h in Bank 0)
   DMP_ODR = 0 for 25 Hz, 2 for 50 Hz
4. Wait 1 millisecond

- Initialize APEX hardware
  1. Set DMP_MEM_RESET_EN to 1 (Register 0x4Bh in Bank 0)
  2. Wait 1 millisecond
  3. Set SLEEP_TIME_OUT (Register 0x43h in Bank 4) if default value does not meet needs
  4. Wait 1 millisecond
  5. Set MOUNTING_MATRIX (Register 0x44h in Bank 4) if default value does not meet needs
  6. Wait 1 millisecond
  7. Set SLEEP_GESTURE_DELAY (Register 0x45h in Bank 4) if default value does not meet needs
  8. Wait 1 millisecond
  9. Set DMP_INIT_EN to 1 (Register 0x4Bh in Bank 0)
  10. Enable Raise to Wake/Sleep, source for INT1 by setting bit 2,1 in register INT_SOURCE6 (Register 0x4Dh in Bank 4) to 1. Or if INT2 is selected for Raise to Wake/Sleep, enable Raise to Wake/Sleep source by setting bit 2,1 in register INT_SOURCE7 (Register 0x4Eh in Bank 4) to 1.
  11. Wait 50 milliseconds
  12. Turn on Raise to Wake/Sleep feature by setting R2W_EN to 1 (Register 0x56h in Bank 0)
- Output registers
  1. Read interrupt register (Register 0x38h in Bank 0) for WAKE_INT, SLEEP_INT

8.6 TAP DETECTION PROGRAMMING

- Tap Detection configuration parameters
  1. TAP_TMAX (Register 0x47h in Bank 4)
  2. TAP_TMIN (Register 0x47h in Bank 4)
  3. TAP_TAVG (Register 0x47h in Bank 4)
  4. TAP_MIN_JERK_THR (Register 0x46h in Bank 4)
  5. TAP_MAX_PEAK_TOL (Register 0x46h in Bank 4)
  6. TAP_ENABLE (Register 0x56h in Bank 0)

- Initialize Sensor in a typical configuration
  1. Set accelerometer ODR (Register 0x50h in Bank 0)
     ACCEL_ODR = 15 for 500 Hz (ODR of 200Hz or 1kHz may also be used)
  2. Set power modes and filter configurations as shown below
     - For ODR up to 500Hz, set Accel to Low Power mode (Register 0x4Eh in Bank 0)
       ACCEL_MODE = 2 and ACCEL_LP_CLK_SEL = 0, (Register 0x4Dh in Bank 0) for low power mode
       Set filter settings as follows: ACCEL_DEC2_M2_ORD = 2 (Register 0x53h in Bank 0); ACCEL_UI_FILT_BW = 4 (Register 0x52h in Bank 0)
     - For ODR of 1kHz, set Accel to Low Noise mode (Register 0x4Eh in Bank 0) ACCEL_MODE = 1

       Set filter settings as follows: ACCEL_UI_FILT_ORD = 2 (Register 0x53h in Bank 0); ACCEL_UI_FILT_BW = 0 (Register 0x52h in Bank 0)
  3. Wait 1 millisecond

- Initialize APEX hardware
  1. Set TAP_TMAX to 2 (Register 0x47h in Bank 4)
  2. Set TAP_TMIN to 3 (Register 0x47h in Bank 4)
  3. Set TAP_TAVG to 3 (Register 0x47h in Bank 4)
  4. Set TAP_MIN_JERK_THR to 17 (Register 0x46h in Bank 4)
  5. Set TAP_MAX_PEAK_TOL to 2 (Register 0x46h in Bank 4)

6. Wait 1 millisecond
7. Enable TAP source for INT1 by setting bit 0 in register INT_SOURCE6 (Register 0x4Dh in Bank 4) to 1. Or if INT2 is selected for TAP, enable TAP source by setting bit 0 in register INT_SOURCE7 (Register 0x4Eh in Bank 4) to 1.
8. Wait 50 milliseconds
9. Turn on TAP feature by setting TAP_ENABLE to 1 (Register 0x56h in Bank 0)

- Output registers
  1. Read interrupt register (Register 0x38h in Bank 0) for TAP_DET_INT
  2. Read the tap count in TAP_NUM (Register 0x35h in Bank 0)
  3. Read the tap axis in TAP_AXIS (Register 0x35h in Bank 0)
  4. Read the polarity of tap pulse in TAP_DIR (Register 0x35h in Bank 0)

8.7 WAKE ON MOTION PROGRAMMING

- Wake on Motion configuration parameters
  1. WOM_X_TH (Register 0x4Ah in Bank 4)
  2. WOM_Y_TH (Register 0x4Bh in Bank 4)
  3. WOM_Z_TH (Register 0x4Ch in Bank 4)
  4. WOM_INT_MODE (Register 0x57h in Bank 0)
  5. WOM_MODE (Register 0x57h in Bank 0)

- Initialize Sensor in a typical configuration
  1. Set accelerometer ODR (Register 0x50h in Bank 0)
     ACCEL_ODR = 9 for 50 Hz
  2. Set Accel to Low Power mode (Register 0x4Eh in Bank 0)
     ACCEL_MODE = 2 and (Register 0x4Dh in Bank 0), ACCEL_LP_CLK_SEL = 0, for low power mode
  3. Wait 1 millisecond

- Initialize APEX hardware
  1. Set WOM_X_TH to 98 (Register 0x4Ah in Bank 4)
  2. Set WOM_Y_TH to 98 (Register 0x4Bh in Bank 4)
  3. Set WOM_Z_TH to 98 (Register 0x4Ch in Bank 4)
  4. Wait 1 millisecond
  5. Enable all 3 axes as WOM sources for INT1 by setting bits 2:0 in register INT_SOURCE1 (Register 0x66h in Bank 0) to 1. Or if INT2 is selected for WOM, enable all 3 axes as WOM sources by setting bits 2:0 in register INT_SOURCE4 (Register 0x69h in Bank 0) to 1.
  6. Wait 50 milliseconds
  7. Turn on WOM feature by setting WOM_INT_MODE to 0, WOM_MODE to 1, SMD_MODE to 1 (Register 0x56h in Bank 0)

- Output registers
  1. Read interrupt register (Register 0x7Dh in Bank 0) for WOM_X_INT
  2. Read interrupt register (Register 0x7Dh in Bank 0) for WOM_Y_INT
  3. Read interrupt register (Register 0x7Dh in Bank 0) for WOM_Z_INT

8.8 SIGNIFICANT MOTION DETECTION PROGRAMMING

- Significant Motion Detection configuration parameters
  1. WOM_X_TH (Register 0x4Ah in Bank 4)
  2. WOM_Y_TH (Register 0x4Bh in Bank 4)
  3. WOM_Z_TH (Register 0x4Ch in Bank 4)
  4. WOM_INT_MODE (Register 0x57h in Bank 0)
  5. WOM_MODE (Register 0x57h in Bank 0)
  6. SMD_MODE (Register 0x57h in Bank 0)

- Initialize Sensor in a typical configuration

1. Set accelerometer ODR (Register 0x50h in Bank 0)
   ACCEL_ODR = 9 for 50 Hz
2. Set Accel to Low Power mode (Register 0x4Eh in Bank 0)
   ACCEL_MODE = 2 and (Register 0x4Dh in Bank 0), ACCEL_LP_CLK_SEL = 0, for low power mode
3. Wait 1 millisecond

- Initialize APEX hardware
  1. Set WOM_X_TH to 98 (Register 0x4Ah in Bank 4)
  2. Set WOM_Y_TH to 98 (Register 0x4Bh in Bank 4)
  3. Set WOM_Z_TH to 98 (Register 0x4Ch in Bank 4)
  4. Wait 1 millisecond
  5. Enable SMD source for INT1 by setting bit 3 in register INT_SOURCE1 (Register 0x66h in Bank 0) to 1. Or if INT2 is selected for SMD, enable SMD source by setting bit 3 in register INT_SOURCE4 (Register 0x69h in Bank 0) to 1.
  6. Wait 50 milliseconds
  7. Turn on SMD feature by setting WOM_INT_MODE to 0, WOM_MODE to 1, SMD_MODE to 3 (Register 0x56h in Bank 0)
- Output registers
  1. Read interrupt register (Register 0x7Dh in Bank 0) for SMD_INT

9 DIGITAL INTERFACE

9.1 I3C^{SM}, I^{2}C AND SPI SERIAL INTERFACES

The internal registers and memory of the ICM-42688-P can be accessed using I3C^{SM} at 12.5MHz (data rates up to 12.5Mbps in SDR mode, 25Mbps in DDR mode), I^{2}C at 1 MHz or SPI at 24 MHz. SPI operates in 3-wire or 4-wire mode. Pin assignments for serial interfaces are described in Section 4.1.

9.2 I3C^{SM} INTERFACE

I3C^{SM} is a new 2-wire digital interface comprised of the signals serial data (SDA) and serial clock (SCLK). I3C^{SM} is intended to improve upon the I^{2}C interface, while preserving backward compatibility.

I3C^{SM} carries the advantages of I^{2}C in simplicity, low pin count, easy board design, and multi-drop (vs. point to point), but provides the higher data rates, simpler pads, and lower power of SPI. I3C^{SM} adds higher throughput for a given frequency, in-band interrupts (from slave to master), dynamic addressing.

ICM-42688-P supports the following features of I3C^{SM}:

- SDR data rate up to 12.5Mbps
- DDR data rate up to 25Mbps
- Dynamic address allocation
- In-band Interrupt (IBI) support
- Support for asynchronous timing control mode 0
- Error detection (CRC and/or Parity)
- Common Command Code (CCC)

The ICM-42688-P always operates as an I3C^{SM} slave device when communicating to the system processor, which thus acts as the I3C^{SM} master. I3C^{SM} master controls an active pullup resistance on SDA, which it can enable and disable. The pullup resistance may be a board level resistor controlled by a pin, or it may be internal to the I3C^{SM} master.

9.3 I^{2}C INTERFACE

I^{2}C is a two-wire interface comprised of the signals serial data (SDA) and serial clock (SCL). In general, the lines are open-drain and bi-directional. In a generalized I^{2}C interface implementation, attached devices can be a master or a slave. The master device puts the slave address on the bus, and the slave device with the matching address acknowledges the master.

The ICM-42688-P always operates as a slave device when communicating to the system processor, which thus acts as the master. SDA and SCL lines typically need pull-up resistors to VDDIO. The maximum bus speed is 1 MHz.

The slave address of the ICM-42688-P is b110100X, which is 7 bits long. The LSB bit of the 7-bit address is determined by the logic level on pin AP_AD0. This allows two ICM-42688-Ps to be connected to the same I^{2}C bus. When used in this configuration, the address of one of the devices should be b1101000 (pin AP_AD0 is logic low) and the address of the other should be b1101001 (pin AP_AD0 is logic high).

9.4 I^{2}C COMMUNICATIONS PROTOCOL

START (S) and STOP (P) Conditions

Communication on the I^{2}C bus starts when the master puts the START condition (S) on the bus, which is defined as a HIGH-to-LOW transition of the SDA line while SCL line is HIGH (see figure below). The bus is considered to be busy until the master puts a STOP condition (P) on the bus, which is defined as a LOW to HIGH transition on the SDA line while SCL is HIGH (see figure below). Additionally, the bus remains busy if a repeated START (Sr) is generated instead of a STOP condition.

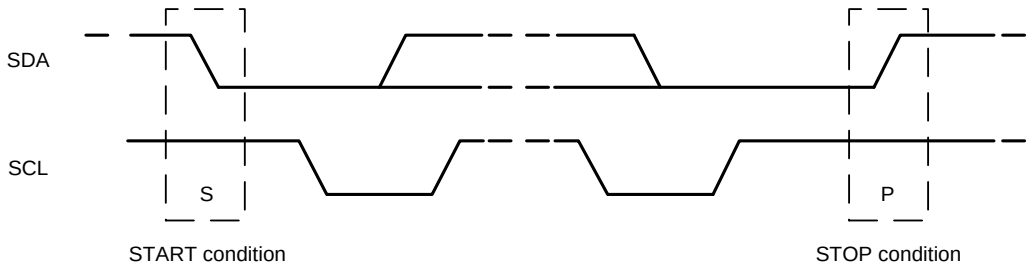

Figure 12. START and STOP Conditions

Data Format / Acknowledge

I²C data bytes are defined to be 8-bits long. There is no restriction to the number of bytes transmitted per data transfer. Each byte transferred must be followed by an acknowledge (ACK) signal. The clock for the acknowledge signal is generated by the master, while the receiver generates the actual acknowledge signal by pulling down SDA and holding it low during the HIGH portion of the acknowledge clock pulse.

If a slave is busy and cannot transmit or receive another byte of data until some other task has been performed, it can hold SCL LOW, thus forcing the master into a wait state. Normal data transfer resumes when the slave is ready, and releases the clock line (refer to the following figure).

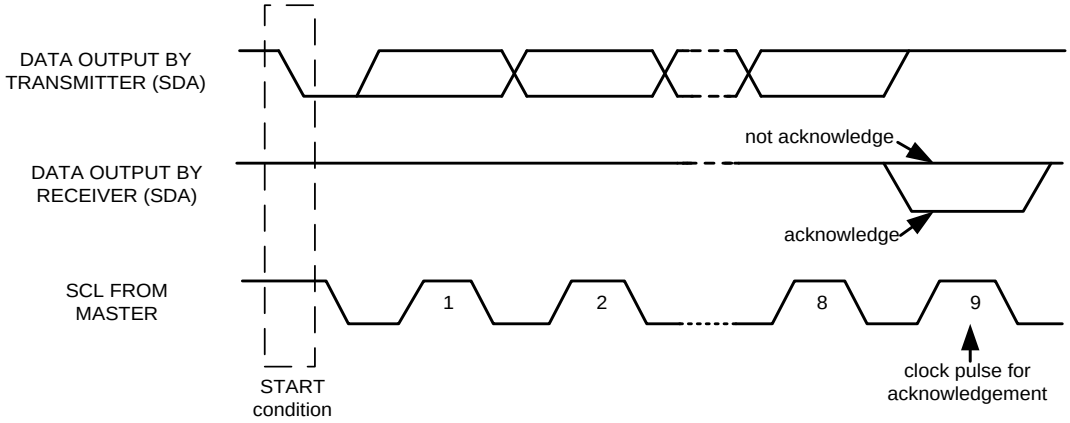

Figure 13. Acknowledge on the I²C Bus

Communications

After beginning communications with the START condition (S), the master sends a 7-bit slave address followed by an 8th bit, the read/write bit. The read/write bit indicates whether the master is receiving data from or is writing to the slave device. Then, the master releases the SDA line and waits for the acknowledge signal (ACK) from the slave device. Each byte transferred must be followed by an acknowledge bit. To acknowledge, the slave device pulls the SDA line LOW and keeps it LOW for the high period of the SCL line. Data transmission is always terminated by the master with a STOP condition (P), thus freeing the communications line. However, the master can generate a repeated START condition (Sr), and address another slave without first generating a STOP condition (P). A LOW to HIGH transition on the SDA line while SCL is HIGH defines the stop condition. All SDA changes should take place when SCL is low, with the exception of start and stop conditions.

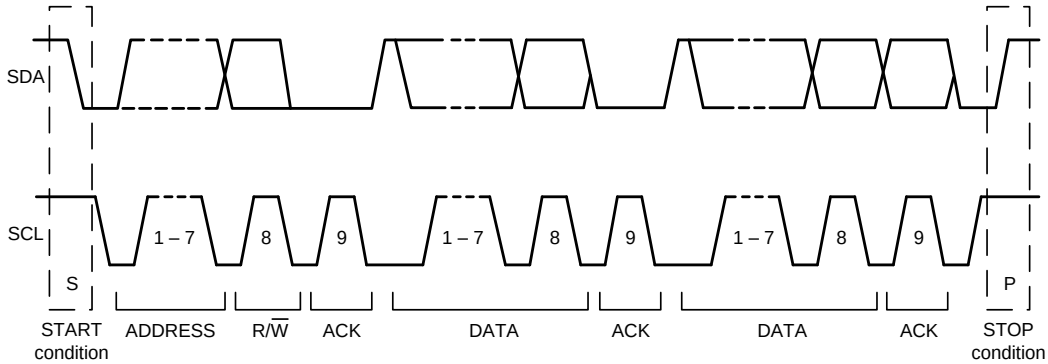

Figure 14. Complete I²C Data Transfer

To write the internal ICM-42688-P registers, the master transmits the start condition (S), followed by the I²C address and the write bit (0). At the 9th clock cycle (when the clock is high), the ICM-42688-P acknowledges the transfer. Then the master puts the register address (RA) on the bus. After the ICM-42688-P acknowledges the reception of the register address, the master puts the register data onto the bus. This is followed by the ACK signal, and data transfer may be concluded by the stop condition (P). To write multiple bytes after the last ACK signal, the master can continue outputting data rather than transmitting a stop signal. In this case, the ICM-42688-P automatically increments the register address and loads the data to the appropriate register. The following figures show single and two-byte write sequences.

Single-Byte Write Sequence

Master	S	AD+W		RA		DATA		P
Slave			ACK		ACK		ACK	

Burst Write Sequence

Master	S	AD+W		RA		DATA		DATA		P
Slave			ACK		ACK		ACK		ACK	

To read the internal ICM-42688-P registers, the master sends a start condition, followed by the I²C address and a write bit, and then the register address that is going to be read. Upon receiving the ACK signal from the ICM-42688-P, the master transmits a start signal followed by the slave address and read bit. As a result, the ICM-42688-P sends an ACK signal and the data. The communication ends with a not acknowledge (NACK) signal and a stop bit from master. The NACK condition is defined such that the SDA line remains high at the 9th clock cycle. The following figures show single and two-byte read sequences.

Single-Byte Read Sequence

Master	S	AD+W		RA		S	AD+R			NACK	P
Slave			ACK		ACK			ACK	DATA		

Burst Read Sequence

Master	S	AD+W		RA		S	AD+R			ACK		NACK	P
Slave			ACK		ACK			ACK	DATA		DATA		

9.5 I²C TERMS

Signal	Description
S	Start Condition: SDA goes from high to low while SCL is high
AD	Slave I²C address

W	Write bit (0)
R	Read bit (1)
ACK	Acknowledge: SDA line is low while the SCL line is high at the 9th clock cycle
NACK	Not-Acknowledge: SDA line stays high at the 9th clock cycle
RA	ICM-42688-P internal register address
DATA	Transmit or received data
P	Stop condition: SDA going from low to high while SCL is high

Table 13. I²C Terms

9.6 SPI INTERFACE

The ICM-42688-P supports 3-wire or 4-wire SPI for the host interface. The ICM-42688-P always operates as a Slave device during standard Master-Slave SPI operation.

With respect to the Master, the Serial Clock output (SCLK), the Serial Data Output (SDO), the Serial Data Input (SDI), and the Serial Data IO (SDIO) are shared among the Slave devices. Each SPI slave device requires its own Chip Select (CS) line from the master.

CS goes low (active) at the start of transmission and goes back high (inactive) at the end. Only one CS line is active at a time, ensuring that only one slave is selected at any given time. The CS lines of the non-selected slave devices are held high, causing their SDO lines to remain in a high-impedance (high-z) state so that they do not interfere with any active devices.

SPI Operational Features

1. Data is delivered MSB first and LSB last
2. Data is latched on the rising edge of SCLK
3. Data should be transitioned on the falling edge of SCLK
4. The maximum frequency of SCLK is 24 MHz
5. SPI read operations are completed in 16 or more clock cycles (two or more bytes). The first byte contains the SPI Address, and the following byte(s) contain(s) the SPI data. The first bit of the first byte contains the Read/Write bit and indicates the Read (1) operation. The following 7 bits contain the Register Address. In cases of multiple-byte Reads, data is two or more bytes:

SPI Address format

MSB							**LSB**
R/W	A6	A5	A4	A3	A2	A1	A0

SPI Data format

MSB							**LSB**
D7	D6	D5	D4	D3	D2	D1	D0

6. SPI write operations are completed in 16 clock cycles (two bytes). The first byte contains the SPI Address, and the second byte contains the SPI data. The first bit of the first byte contains the Read/Write bit and indicates the Write (0) operation. The following 7 bits contain the Register Address.
7. Supports Single or Burst Reads and Single Writes.

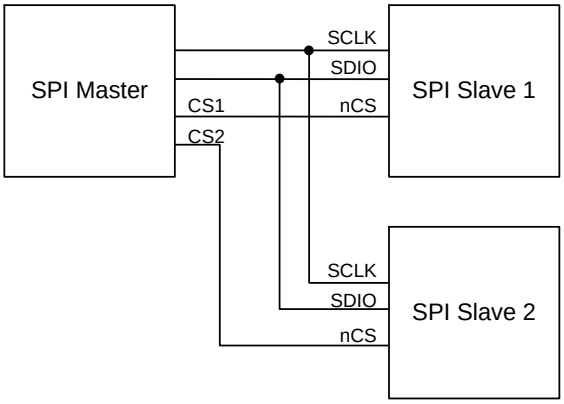

Figure 15. Typical SPI Master/Slave Configuration

10 ASSEMBLY

This section provides general guidelines for assembling InvenSense Micro Electro-Mechanical Systems (MEMS) devices packaged in LGA package.

10.1 ORIENTATION OF AXES

The diagram below shows the orientation of the axes of sensitivity and the polarity of rotation. Note the pin 1 identifier (•) in the figure.

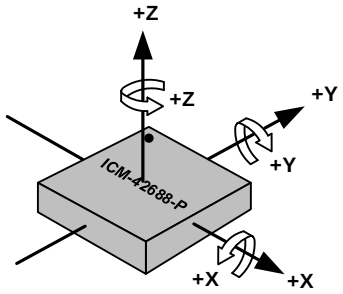

Figure 16. Orientation of Axes of Sensitivity and Polarity of Rotation

10.2 PACKAGE DIMENSIONS

14 Lead LGA (2.5x3x0.91) mm NiAu pad finish

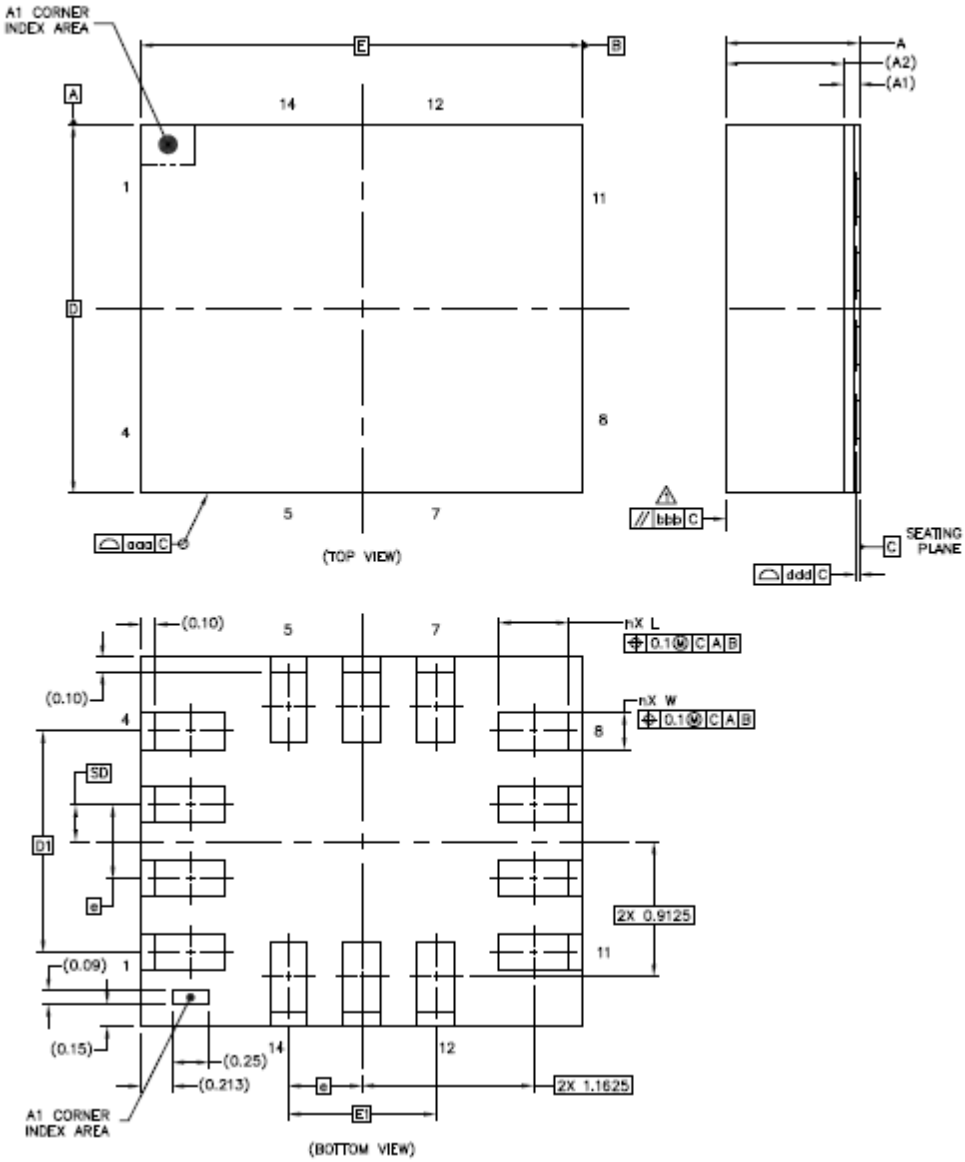

	SYMBOLS	DIMENSIONS IN MILLIMETERS		
		MIN	NOM	MAX
Total Thickness	A	0.85	0.91	0.97
Substrate Thickness	A1		0.105	REF
Mold Thickness	A2		0.8	REF
Body Size	D		2.5	BSC
	E		3	BSC
Lead Width	W	0.2	0.25	0.3
Lead Length	L	0.425	0.475	0.525
Lead Pitch	e		0.5	BSC
Lead Count	n		14	
Edge Pin Center to Center	D1		1.5	BSC
	E1		1	BSC
Body Center to Contact Pin	SD		0.25	BSC
Package Edge Tolerance	aaa		0.1	
Mold Flatness	bbb		0.2	
Coplanarity	ddd		0.08	

11 PART NUMBER PACKAGE MARKING

The part number package marking for ICM-42688-P devices is summarized below:

Part Number	Part Number Package Marking
ICM-42688-P	I428P

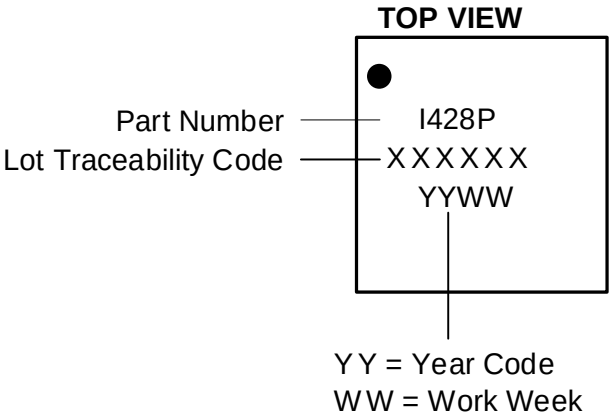

12 USE NOTES

12.1 ACCELEROMETER MODE TRANSITIONS

When transitioning from accelerometer Low Power (LP) mode to accelerometer Low Noise (LN) mode, if ODR is 6.25Hz or lower, software should change ODR to a value of 12.5Hz or higher, because accelerometer LN mode does not support ODR values below 12.5Hz.

When transitioning from accelerometer LN mode to accelerometer LP mode, if ODR is greater than 500Hz, software should change ODR to a value of 500Hz or lower, because accelerometer LP mode does not support ODR values above 500Hz.

12.2 ACCELEROMETER LOW POWER (LP) MODE AVERAGING FILTER SETTING

Software drivers provided with the device use Averaging Filter setting of 16x. This setting is recommended for meeting Android noise requirements in LP mode, and to minimize accelerometer offset variation when transitioning from LP to Low Noise (LN) mode. 1x averaging filter can be used by following the setting configuration shown in section 14.38.

12.3 SETTINGS FOR I²C, I3C^{SM}, AND SPI OPERATION

Upon bootup the device comes up in SPI mode. The following settings should be used for I²C, I3C^{SM}, and SPI operation.

Scenario 1: INT1/INT2 pins are used for interrupt assertion in I3C^{SM} mode.

Register Field	I²C Driver Setting	I3C^{SM} Driver Setting	SPI Driver Setting
I3C_EN (bit 4, register INTF_CONFIG6, address 0x7C, bank 1)	1	1	1
I3C_SDR_EN (bit 0, register INTF_CONFIG6, address 0x7C, bank 1)	0	1	1
I3C_DDR_EN (bit 1, register INTF_CONFIG6, address 0x7C, bank 1)	0	0	1
I3C_BUS_MODE (bit 6, register INTF_CONFIG4, address 0x7A, bank 1)	0	0	0
I2C_SLEW_RATE (bits 5:3, register DRIVE_CONFIG, address 0x13, bank 0)	1	0	0
SPI_SLEW_RATE (bits 2:0, register DRIVE_CONFIG, address 0x13, bank 0)	1	5	5

Scenario 2: IBI is used for interrupt assertion in I3C^{SM} mode.

Register Field	I²C Driver Setting	I3C^{SM} Driver Setting	SPI Driver Setting
I3C_EN (bit 4, register INTF_CONFIG6, address 0x7C, bank 1)	1	1	1
I3C_SDR_EN (bit 0, register INTF_CONFIG6, address 0x7C, bank 1)	0	1	1
I3C_DDR_EN (bit 1, register INTF_CONFIG6, address 0x7C, bank 1)	0	1	1
I3C_BUS_MODE (bit 6, register INTF_CONFIG4, address 0x7A, bank 1)	0	0	0
I2C_SLEW_RATE (bits 5:3, register DRIVE_CONFIG, address 0x13, bank 0)	1	0	0
SPI_SLEW_RATE (bits 2:0, register DRIVE_CONFIG, address 0x13, bank 0)	1	5	5

12.4 NOTCH FILTER AND ANTI-ALIAS FILTER OPERATION

Use of Notch Filter and Anti-Alias Filter is supported only for Low Noise (LN) mode operation. The host is responsible for keeping the UI path in LN mode while Notch Filter and Anti-Alias Filter are turned on.

12.5 EXTERNAL CLOCK INPUT EFFECT ON ODR

ODR values supported by the device scale with external clock frequency, if external clock input is used. The ODR values shown in the datasheet are supported with external clock input frequency of 32kHz. For any other external clock input frequency, these ODR values will scale by a factor of (External clock value in kHz / 32). For example, if an external clock frequency of 32.768kHz is used, instead of ODR value of 500Hz, it will be 500 * (32.768 / 32) = 512Hz.

12.6 INT_ASYNC_RESET CONFIGURATION

For register INT_CONFIG1 (bank 0 register 0x64) bit 4 INT_ASYNC_RESET, user should change setting to 0 from default setting of 1, for proper INT1 and INT2 pin operation.

12.7 FIFO TIMESTAMP INTERVAL SCALING

When RTC_MODE =1 (bank 0 register 0x4D bit2) and register INTF_CONFIG5 (bank 1 register 0x7B) bit 2:1 (PIN9_FUNCTION) is set to 10 for CLKIN input;

THEN

If TMST_RES = 0 (corresponding to timestamp resolution of 1µs), timestamp interval reported in FIFO requires scaling by a factor of 32.768/RTC Frequency.
For example when ODR = 1kHz, RTC Frequency 32kHz, the true timestamp interval should be 1000µs. But the value in FIFO toggles between 976 and 977. After scaling 976.5 * 32.768/32 = 1000µs.

If TMST_RES = 1 (corresponding to timestamp resolution of 1 RTC clock period), timestamp interval reported in FIFO requires scaling by a factor of RTC clock period.
For example when ODR = 1kHz, RTC Frequency 32kHz, the true timestamp interval should be 1000µs. But the value in FIFO is 32. After scaling 1/32kHz*32 = 1000µs.

ELSE

If TMST_RES = 0 (corresponding to timestamp resolution of 1µs), timestamp interval reported in FIFO requires scaling by a factor of 32/30.
For example when ODR = 1kHz, the true timestamp interval should be 1000µs. But the value in FIFO toggles between 937 and 938. After scaling 937.5 * 32/30 = 1000µs.

If TMST_RES = 1 (corresponding to timestamp resolution of 16µs), timestamp interval reported in FIFO requires scaling by a factor of 16*32/30.
For example when ODR = 1kHz, the true timestamp interval should be 1000µs. But the value in FIFO toggles between 58 and 59. After scaling 58.5 * 16* 32/30 = 1000µs.

12.8 SUPPLEMENTARY INFORMATION FOR FIFO_HOLD_LAST_DATA_EN

This section contains supplementary information for using register field FIFO_HOLD_LAST_DATA_EN (bit 7) of register INTF_CONFIG0 (address 0x4C, bank 0) .

The following table shows the values in FIFO:

FIFO_HOLD_LAST_DATA_EN		16-bit FIFO Packet	20-bit FIFO Packet
0 (Insert Invalid code)	Valid sample	All values in: {-32766 to +32767}	Gyro: All Even numbers in {-524256 to +524286} Example: {-524256, -524254, -524252, -524250 …..+524284, +524286}
			Accel: Every Other Even number in {-524256 to +524284} Example: {-524256, -524252, -524248, -524244 …..+524280, +524284}
	Invalid sample	-32768	-524288
1 ("copy last valid" mode: No invalid code insertion)	Valid sample	All values in: {-32768 to +32767}	Gyro: All Even numbers in {-524288 to +524286} Example: {-524288, -524286, -524284, -524282 …..+524284, +524286 }
			Accel: Every Other Even number in {-524288 to +524284 } Example: {-524288, -524284, -524280 …..+524280, +524284}
	Invalid sample	Copy last valid sample	

The following table shows the values in sense registers on reset:

	FIFO_HOLD_LAST_DATA_EN = 0	FIFO_HOLD_LAST_DATA_EN = 1
Power On Reset till First Sample	Accel/Gyro/Temperature Sensor = -32768	Accel/Gyro/Temperature Sensor = 0

The following table shows the values in sense registers after first sample is received. As shown in table, the combination of FIFO_HOLD_LAST_DATA_EN and FSYNC Tag determine the range of values read for valid samples and invalid samples.

FIFO_HOLD_LAST_DATA_EN		**FSYNC tag disabled**	**FSYNC Enabled on one Sensor**		
			Sensor selected for FSYNC Tag		Other Sensor Not selected for FSYNC tagging
			FSYNC tagged	FSYNC not tagged	
0 (Insert Invalid code)	Valid sample	All values in: {-32766 to +32767}	All ODD values in: {-32765 to +32767}	All EVEN values in: {-32766 to +32766}	All values in: {-32766 to +32767}
	Invalid sample	Registers do not receive invalid samples. Registers hold last valid sample until new one arrives			
1 ("copy last valid" mode: No invalid code insertion)	Valid sample	All values in: {-32768 to +32767}	All ODD values in: {-32767 to +32767}	All EVEN values in: {-32768 to +32766}	All values in: {-32768 to +32767}
	Invalid sample	Registers do not receive invalid samples. Registers hold last valid sample until new one arrives			

12.9 REGISTER VALUES MODIFICATION

The only register settings that user can modify during sensor operation are for ODR selection, FSR selection, and sensor mode changes (register parameters GYRO_ODR, ACCEL_ODR, GYRO_FS_SEL, ACCEL_FS_SEL, GYRO_MODE, ACCEL_MODE). User must not modify any other register values during sensor operation. The following procedure must be used for other register values modification.

- Turn Accel and Gyro Off
- Modify register values
- Turn Accel and/or Gyro On

13 REGISTER MAP

This section lists the register map for the ICM-42688-P, for user banks 0, 1, 2, 3, 4.

13.1 USER BANK 0 REGISTER MAP

Addr (Hex)	Addr (Dec.)	Register Name	Serial I/F	Bit7	Bit6	Bit5	Bit4	Bit3	Bit2	Bit1	Bit0
11	17	DEVICE_CONFIG	R/W	-			SPI_MODE	-			SOFT_RESET_CONFIG
13	19	DRIVE_CONFIG	R/W	-		I2C_SLEW_RATE			SPI_SLEW_RATE		
14	20	INT_CONFIG		-		INT2_MODE	INT2_DRIVE_CIRCUIT	INT2_POLARITY	INT1_MODE	INT1_DRIVE_CIRCUIT	INT1_POLARITY
16	22	FIFO_CONFIG	R/W	FIFO_MODE		-					
1D	29	TEMP_DATA1	SYNCR	TEMP_DATA[15:8]							
1E	30	TEMP_DATA0	SYNCR	TEMP_DATA[7:0]							
1F	31	ACCEL_DATA_X1	SYNCR	ACCEL_DATA_X[15:8]							
20	32	ACCEL_DATA_X0	SYNCR	ACCEL_DATA_X[7:0]							
21	33	ACCEL_DATA_Y1	SYNCR	ACCEL_DATA_Y[15:8]							
22	34	ACCEL_DATA_Y0	SYNCR	ACCEL_DATA_Y[7:0]							
23	35	ACCEL_DATA_Z1	SYNCR	ACCEL_DATA_Z[15:8]							
24	36	ACCEL_DATA_Z0	SYNCR	ACCEL_DATA_Z[7:0]							
25	37	GYRO_DATA_X1	SYNCR	GYRO _DATA_X[15:8]							
26	38	GYRO _DATA_X0	SYNCR	GYRO _DATA_X[7:0]							
27	39	GYRO _DATA_Y1	SYNCR	GYRO _DATA_Y[15:8]							
28	40	GYRO _DATA_Y0	SYNCR	GYRO _DATA_Y[7:0]							
29	41	GYRO _DATA_Z1	SYNCR	GYRO_DATA_Z[15:8]							
2A	42	GYRO _DATA_Z0	SYNCR	GYRO_DATA_Z[7:0]							
2B	43	TMST_FSYNCH	SYNCR	TMST_FSYNC_DATA[15:8]							
2C	44	TMST_FSYNCL	SYNCR	TMST_FSYNC_DATA[7:0]							
2D	45	INT_STATUS	R/C	-	UI_FSYNC_INT	PLL_RDY_INT	RESET_DONE_INT	DATA_RDY_INT	FIFO_THS_INT	FIFO_FULL_INT	AGC_RDY_INT
2E	46	FIFO_COUNTH	R	FIFO_COUNT[15:8]							
2F	47	FIFO_COUNTL	R	FIFO_COUNT[7:0]							
30	48	FIFO_DATA	R	FIFO_DATA							
31	49	APEX_DATA0	SYNCR	STEP_CNT[7:0]							
32	50	APEX_DATA1	SYNCR	STEP_CNT[15:8]							
33	51	APEX_DATA2	R	STEP_CADENCE							
34	52	APEX_DATA3	R	-					DMP_IDLE	ACTIVITY_CLASS	
35	53	APEX_DATA4	R	-			TAP_NUM		TAP_AXIS		TAP_DIR
36	54	APEX_DATA5	R	-		DOUBLE_TAP_TIMING					
37	55	INT_STATUS2	R/C	-				SMD_INT	WOM_Z_INT	WOM_Y_INT	WOM_X_INT
38	56	INT_STATUS3	R/C	-		STEP_DET_INT	STEP_CNT_OVF_INT	TILT_DET_INT	WAKE_INT	SLEEP_INT	TAP_DET_INT
4B	75	SIGNAL_PATH_RESET	W/C	-	DMP_INIT_EN	DMP_MEM_RESET_EN	-	ABORT_AND_RESET	TMST_STROBE	FIFO_FLUSH	-
4C	76	INTF_CONFIG0	R/W	FIFO_HOLD_LAST_DATA_EN	FIFO_COUNT_REC	FIFO_COUNT_ENDIAN	SENSOR_DATA_ENDIAN	-		UI_SIFS_CFG	
4D	77	INTF_CONFIG1	R/W	-				ACCEL_LP_CLK_SEL	RTC_MODE	CLKSEL	
4E	78	PWR_MGMT0	R/W	-		TEMP_DIS	IDLE	GYRO_MODE		ACCEL_MODE	
4F	79	GYRO_CONFIG0	R/W	GYRO_FS_SEL			-	GYRO_ODR			
50	80	ACCEL_CONFIG0	R/W	ACCEL_FS_SEL			-	ACCEL_ODR			
51	81	GYRO_CONFIG1	R/W	TEMP_FILT_BW			-	GYRO_UI_FILT_ORD		GYRO_DEC2_M2_ORD	
52	82	GYRO_ACCEL_CONFIG0	R/W	ACCEL_UI_FILT_BW				GYRO_UI_FILT_BW			
53	83	ACCEL_CONFIG1	R/W	-			ACCEL_UI_FILT_ORD		ACCEL_DEC2_M2_ORD		-

Addr (Hex)	Addr (Dec.)	Register Name	Serial I/F	Bit7	Bit6	Bit5	Bit4	Bit3	Bit2	Bit1	Bit0
54	84	TMST_CONFIG	R/W	-			TMST_TO_REGS_EN	TMST_RES	TMST_DELTA_EN	TMST_FSYNC_EN	TMST_EN
56	86	APEX_CONFIG0	R/W	DMP_POWER_SAVE	TAP_ENABLE	PED_ENABLE	TILT_ENABLE	R2W_EN	-	DMP_ODR	
57	87	SMD_CONFIG	R/W	-				WOM_INT_MODE	WOM_MODE	SMD_MODE	
5F	95	FIFO_CONFIG1	R/W	-	FIFO_RESUME_PARTIAL_RD	FIFO_WM_GT_TH	FIFO_HIRES_EN	FIFO_TMST_FSYNC_EN	FIFO_TEMP_EN	FIFO_GYRO_EN	FIFO_ACCEL_EN
60	96	FIFO_CONFIG2	R/W	FIFO_WM[7:0]							
61	97	FIFO_CONFIG3	R/W	-				FIFO_WM[11:8]			
62	98	FSYNC_CONFIG	R/W	-	FSYNC_UI_SEL			-		FSYNC_UI_FLAG_CLEAR_SEL	FSYNC_POLARITY
63	99	INT_CONFIG0	R/W	-		UI_DRDY_INT_CLEAR		FIFO_THS_INT_CLEAR		FIFO_FULL_INT_CLEAR	
64	100	INT_CONFIG1	R/W	-	INT_TPULSE_DURATION	INT_TDEASSERT_DISABLE	INT_ASYNC_RESET	-			
65	101	INT_SOURCE0	R/W	-	UI_FSYNC_INT1_EN	PLL_RDY_INT1_EN	RESET_DONE_INT1_EN	UI_DRDY_INT1_EN	FIFO_THS_INT1_EN	FIFO_FULL_INT1_EN	UI_AGC_RDY_INT1_EN
66	102	INT_SOURCE1	R/W	-	I3C_PROTOCOL_ERROR_INT1_EN	-		SMD_INT1_EN	WOM_Z_INT1_EN	WOM_Y_INT1_EN	WOM_X_INT1_EN
68	104	INT_SOURCE3	R/W	-	UI_FSYNC_INT2_EN	PLL_RDY_INT2_EN	RESET_DONE_INT2_EN	UI_DRDY_INT2_EN	FIFO_THS_INT2_EN	FIFO_FULL_INT2_EN	UI_AGC_RDY_INT2_EN
69	105	INT_SOURCE4	R/W	-	I3C_PROTOCOL_ERROR_INT2_EN	-		SMD_INT2_EN	WOM_Z_INT2_EN	WOM_Y_INT2_EN	WOM_X_INT2_EN
6C	108	FIFO_LOST_PKT0	R	FIFO_LOST_PKT_CNT[15:8]							
6D	109	FIFO_LOST_PKT1	R	FIFO_LOST_PKT_CNT[7:0]							
70	112	SELF_TEST_CONFIG	R/W		ACCEL_ST_POWER	EN_AZ_ST	EN_AY_ST	EN_AX_ST	EN_GZ_ST	EN_GY_ST	EN_GX_ST
75	117	WHO_AM_I	R	WHOAMI							
76	118	REG_BANK_SEL	R/W	-					BANK_SEL		

13.2 USER BANK 1 REGISTER MAP

Addr (Hex)	Addr (Dec.)	Register Name	Serial I/F	Bit7	Bit6	Bit5	Bit4	Bit3	Bit2	Bit1	Bit0
03	03	SENSOR_CONFIG0	R/W	-		ZG_DISABLE	YG_DISABLE	XG_DISABLE	ZA_DISABLE	YA_DISABLE	XA_DISABLE
0B	11	GYRO_CONFIG_STATIC2	R/W	-						GYRO_AAF_DIS	GYRO_NF_DIS
0C	12	GYRO_CONFIG_STATIC3	R/W	-		GYRO_AAF_DELT					
0D	13	GYRO_CONFIG_STATIC4	R/W	GYRO_AAF_DELTSQR[7:0]							
0E	14	GYRO_CONFIG_STATIC5	R/W	GYRO_AAF_BITSHIFT				GYRO_AAF_DELTSQR[11:8]			
0F	15	GYRO_CONFIG_STATIC6	R/W	GYRO_X_NF_COSWZ[7:0]							
10	16	GYRO_CONFIG_STATIC7	R/W	GYRO_Y_NF_COSWZ[7:0]							
11	17	GYRO_CONFIG_STATIC8	R/W	GYRO_Z_NF_COSWZ[7:0]							
12	18	GYRO_CONFIG_STATIC9	R/W	-		GYRO_Z_NF_COSWZ_SEL[0]	GYRO_Y_NF_COSWZ_SEL[0]	GYRO_X_NF_COSWZ_SEL[0]	GYRO_Z_NF_COSWZ[8]	GYRO_Y_NF_COSWZ[8]	GYRO_X_NF_COSWZ[8]
13	19	GYRO_CONFIG_STATIC10	R/W	-	GYRO_NF_BW_SEL			-			
5F	95	XG_ST_DATA	R/W	XG_ST_DATA							
60	96	YG_ST_DATA	R/W	YG_ST_DATA							
61	97	ZG_ST_DATA	R/W	ZG_ST_DATA							
62	98	TMSTVAL0	R	TMST_VALUE[7:0]							
63	99	TMSTVAL1	R	TMST_VALUE[15:8]							
64	100	TMSTVAL2	R	-				TMST_VALUE[19:16]			
7A	122	INTF_CONFIG4	R/W	-	I3C_BUS_MODE	-				SPI_AP_4WIRE	-
7B	123	INTF_CONFIG5	R/W	-					PIN9_FUNCTION		-
7C	124	INTF_CONFIG6	R/W	ASYNCTIME0_DIS	-		I3C_EN	I3C_IBI_BYTE_EN	I3C_IBI_EN	I3C_DDR_EN	I3C_SDR_EN

13.3 USER BANK 2 REGISTER MAP

Addr (Hex)	Addr (Dec.)	Register Name	Serial I/F	Bit7	Bit6	Bit5	Bit4	Bit3	Bit2	Bit1	Bit0
03	03	ACCEL_CONFIG_STATIC2	R/W	-	ACCEL_AAF_DELT						ACCEL_AAF_DIS
04	04	ACCEL_CONFIG_STATIC3	R/W	ACCEL_AAF_DELTSQR[7:0]							
05	05	ACCEL_CONFIG_STATIC4	R/W	ACCEL_AAF_BITSHIFT				ACCEL_AAF_DELTSQR[11:8]			
3B	59	XA_ST_DATA	R/W	XA_ST_DATA							
3C	60	YA_ST_DATA	R/W	YA_ST_DATA							
3D	61	ZA_ST_DATA	R/W	ZA_ST_DATA							

13.4 USER BANK 4 REGISTER MAP

Addr (Hex)	Addr (Dec.)	Register Name	Serial I/F	Bit7	Bit6	Bit5	Bit4	Bit3	Bit2	Bit1	Bit0
40	64	APEX_CONFIG1	R/W	LOW_ENERGY_AMP_TH_SEL				DMP_POWER_SAVE_TIME_SEL			
41	65	APEX_CONFIG2	R/W	PED_AMP_TH_SEL				PED_STEP_CNT_TH_SEL			
42	66	APEX_CONFIG3	R/W	PED_STEP_DET_TH_SEL			PED_SB_TIMER_TH_SEL			PED_HI_EN_TH_SEL	
43	67	APEX_CONFIG4	R/W	TILT_WAIT_TIME_SEL		SLEEP_TIME_OUT			-		
44	68	APEX_CONFIG5	R/W	-					MOUNTING_MATRIX		
45	69	APEX_CONFIG6	R/W	-					SLEEP_GESTURE_DELAY		
46	70	APEX_CONFIG7	R/W	TAP_MIN_JERK_THR						TAP_MAX_PEAK_TOL	
47	71	APEX_CONFIG8	R/W	-	TAP_TMAX		TAP_TAVG		TAP_TMIN		
48	72	APEX_CONFIG9	R/W	-							SENSITIVITY_MODE
4A	74	ACCEL_WOM_X_THR	R/W	WOM_X_TH							
4B	75	ACCEL_WOM_Y_THR	R/W	WOM_Y_TH							
4C	76	ACCEL_WOM_Z_THR	R/W	WOM_Z_TH							
4D	77	INT_SOURCE6	R/W	-		STEP_DET_INT1_EN	STEP_CNT_OFL_INT1_EN	TILT_DET_INT1_EN	WAKE_DET_INT1_EN	SLEEP_DET_INT1_EN	TAP_DET_INT1_EN
4E	78	INT_SOURCE7	R/W	-		STEP_DET_INT2_EN	STEP_CNT_OFL_INT2_EN	TILT_DET_INT2_EN	WAKE_DET_INT2_EN	SLEEP_DET_INT2_EN	TAP_DET_INT2_EN
4F	79	INT_SOURCE8	R/W	-		FSYNC_IBI_EN	PLL_RDY_IBI_EN	UI_DRDY_IBI_EN	FIFO_THS_IBI_EN	FIFO_FULL_IBI_EN	AGC_RDY_IBI_EN
50	80	INT_SOURCE9	R/W	I3C_PROTOCOL_ERROR_IBI_EN	-		SMD_IBI_EN	WOM_Z_IBI_EN	WOM_Y_IBI_EN	WOM_X_IBI_EN	-
51	81	INT_SOURCE10	R/W	-		STEP_DET_IBI_EN	STEP_CNT_OFL_IBI_EN	TILT_DET_IBI_EN	WAKE_DET_IBI_EN	SLEEP_DET_IBI_EN	TAP_DET_IBI_EN
77	119	OFFSET_USER0	R/W	GYRO_X_OFFUSER[7:0]							
78	120	OFFSET_USER1	R/W	GYRO_Y_OFFUSER[11:8]				GYRO_X_OFFUSER[11:8]			
79	121	OFFSET_USER2	R/W	GYRO_Y_OFFUSER[7:0]							
7A	122	OFFSET_USER3	R/W	GYRO_Z_OFFUSER[7:0]							
7B	123	OFFSET_USER4	R/W	ACCEL_X_OFFUSER[11:8]				GYRO_Z_OFFUSER[11:8]			
7C	124	OFFSET_USER5	R/W	ACCEL_X_OFFUSER[7:0]							
7D	125	OFFSET_USER6	R/W	ACCEL_Y_OFFUSER[7:0]							
7E	126	OFFSET_USER7	R/W	ACCEL_Z_OFFUSER[11:8]				ACCEL_Y_OFFUSER[11:8]			
7F	127	OFFSET_USER8	R/W	ACCEL_Z_OFFUSER[7:0]							

Detailed register descriptions are provided in the sections that follow. Please note the following regarding Clock Domain for each register:

- Clock Domain: SCLK_UI means that the register is controlled from the UI interface

Register fields marked as Reserved must not be modified by the user. The Reset Value of the register can be used to determine the default value of reserved register fields, and unless otherwise noted this default value must be maintained even if the values of other register fields are modified by the user.

14 USER BANK 0 REGISTER MAP – DESCRIPTIONS

This section describes the function and contents of each register within USR Bank 0.

Note: The device powers up in sleep mode.

14.1 DEVICE_CONFIG

Name: DEVICE_CONFIG
Address: 17 (11h)
Serial IF: R/W
Reset value: 0x00
Clock Domain: SCLK_UI

BIT	NAME	FUNCTION
7:5	-	Reserved
4	SPI_MODE	SPI mode selection 0: Mode 0 and Mode 3 (default) 1: Mode 1 and Mode 2
3:1	-	Reserved
0	SOFT_RESET_CONFIG	Software reset configuration 0: Normal (default) 1: Enable reset After writing 1 to this bitfield, wait 1ms for soft reset to be effective, before attempting any other register access

14.2 DRIVE_CONFIG

Name: DRIVE_CONFIG
Address: 19 (13h)
Serial IF: R/W
Reset value: 0x05
Clock Domain: SCLK_UI

BIT	NAME	FUNCTION
7:6	-	Reserved
5:3	I2C_SLEW_RATE	Controls slew rate for output pin 14 in I^2C mode only 000: 20ns-60ns 001: 12ns-36ns 010: 6ns-18ns 011: 4ns-12ns 100: 2ns-6ns 101: < 2ns 110: Reserved 111: Reserved
2:0	SPI_SLEW_RATE	Controls slew rate for output pin 14 in SPI or $I3C^{SM}$ mode, and for all other output pins 000: 20ns-60ns 001: 12ns-36ns 010: 6ns-18ns 011: 4ns-12ns 100: 2ns-6ns 101: < 2ns 110: Reserved 111: Reserved

14.3 INT_CONFIG

Name: INT_CONFIG Address: 20 (14h) Serial IF: R/W Reset value: 0x00 Clock Domain: SCLK_UI		
BIT	**NAME**	**FUNCTION**
7:6	-	Reserved
5	INT2_MODE	INT2 interrupt mode 0: Pulsed mode 1: Latched mode
4	INT2_DRIVE_CIRCUIT	INT2 drive circuit 0: Open drain 1: Push pull
3	INT2_POLARITY	INT2 interrupt polarity 0: Active low (default) 1: Active high
2	INT1_MODE	INT1 interrupt mode 0: Pulsed mode 1: Latched mode
1	INT1_DRIVE_CIRCUIT	INT1 drive circuit 0: Open drain 1: Push pull
0	INT1_POLARITY	INT1 interrupt polarity 0: Active low (default) 1: Active high

14.4 FIFO_CONFIG

Name: FIFO_CONFIG Address: 22 (16h) Serial IF: R/W Reset value: 0x00 Clock Domain: SCLK_UI		
BIT	**NAME**	**FUNCTION**
7:6	FIFO_MODE	00: Bypass Mode (default) 01: Stream-to-FIFO Mode 10: STOP-on-FULL Mode 11: STOP-on-FULL Mode
5:0	-	Reserved

14.5 TEMP_DATA1

Name: TEMP_DATA1 Address: 29 (1Dh) Serial IF: SYNCR Reset value: 0x80 Clock Domain: SCLK_UI		
BIT	**NAME**	**FUNCTION**
7:0	TEMP_DATA[15:8]	Upper byte of temperature data

14.6 TEMP_DATA0

Name: TEMP_DATA0 Address: 30 (1Eh) Serial IF: SYNCR Reset value: 0x00 Clock Domain: SCLK_UI		
BIT	**NAME**	**FUNCTION**
7:0	TEMP_DATA[7:0]	Lower byte of temperature data

Temperature sensor register data TEMP_DATA is updated with new data at max(Accelerometer ODR, Gyroscope ODR).

Temperature data value from the sensor data registers can be converted to degrees centigrade by using the following formula:

Temperature in Degrees Centigrade = (TEMP_DATA / 132.48) + 25

Temperature data stored in FIFO is an 8-bit quantity, FIFO_TEMP_DATA. It can be converted to degrees centigrade by using the following formula:

Temperature in Degrees Centigrade = (FIFO_TEMP_DATA / 2.07) + 25

14.7 ACCEL_DATA_X1

Name: ACCEL_DATA_X1 Address: 31 (1Fh) Serial IF: SYNCR Reset value: 0x80 Clock Domain: SCLK_UI		
BIT	**NAME**	**FUNCTION**
7:0	ACCEL_DATA_X[15:8]	Upper byte of Accel X-axis data

14.8 ACCEL_DATA_X0

Name: ACCEL_DATA_X0 Address: 32 (20h) Serial IF: SYNCR Reset value: 0x00 Clock Domain: SCLK_UI		
BIT	**NAME**	**FUNCTION**
7:0	ACCEL_DATA_X[7:0]	Lower byte of Accel X-axis data

14.9 ACCEL_DATA_Y1

Name: ACCEL_DATA_Y1 Address: 33 (21h) Serial IF: SYNCR Reset value: 0x80 Clock Domain: SCLK_UI		
BIT	**NAME**	**FUNCTION**
7:0	ACCEL_DATA_Y[15:8]	Upper byte of Accel Y-axis data

14.10 ACCEL_DATA_Y0

Name: ACCEL_DATA_Y0 Address: 34 (22h) Serial IF: SYNCR Reset value: 0x00 Clock Domain: SCLK_UI		
BIT	**NAME**	**FUNCTION**
7:0	ACCEL_DATA_Y[7:0]	Lower byte of Accel Y-axis data

14.11 ACCEL_DATA_Z1

Name: ACCEL_DATA_Z1 Address: 35 (23h) Serial IF: SYNCR Reset value: 0x80 Clock Domain: SCLK_UI		
BIT	**NAME**	**FUNCTION**
7:0	ACCEL_DATA_Z[15:8]	Upper byte of Accel Z-axis data

14.12 ACCEL_DATA_Z0

Name: ACCEL_DATA_Z0 Address: 36 (24h) Serial IF: SYNCR Reset value: 0x00 Clock Domain: SCLK_UI		
BIT	**NAME**	**FUNCTION**
7:0	ACCEL_DATA_Z[7:0]	Lower byte of Accel Z-axis data

14.13 GYRO_DATA_X1

Name: GYRO_DATA_X1 Address: 37 (25h) Serial IF: SYNCR Reset value: 0x80 Clock Domain: SCLK_UI		
BIT	**NAME**	**FUNCTION**
7:0	GYRO_DATA_X[15:8]	Upper byte of Gyro X-axis data

14.14 GYRO_DATA_X0

Name: GYRO_DATA_X0 Address: 38 (26h) Serial IF: SYNCR Reset value: 0x00 Clock Domain: SCLK_UI		
BIT	**NAME**	**FUNCTION**
7:0	GYRO_DATA_X[7:0]	Lower byte of Gyro X-axis data

14.15 GYRO_DATA_Y1

Name: GYRO_DATA_Y1 Address: 39 (27h) Serial IF: SYNCR Reset value: 0x80 Clock Domain: SCLK_UI		
BIT	**NAME**	**FUNCTION**
7:0	GYRO_DATA_Y[15:8]	Upper byte of Gyro Y-axis data

14.16 GYRO_DATA_Y0

Name: GYRO_DATA_Y0 Address: 40 (28h) Serial IF: SYNCR Reset value: 0x00 Clock Domain: SCLK_UI		
BIT	**NAME**	**FUNCTION**
7:0	GYRO_DATA_Y[7:0]	Lower byte of Gyro Y-axis data

14.17 GYRO_DATA_Z1

Name: GYRO_DATA_Z1 Address: 41 (29h) Serial IF: SYNCR Reset value: 0x80 Clock Domain: SCLK_UI		
BIT	**NAME**	**FUNCTION**
7:0	GYRO_DATA_Z[15:8]	Upper byte of Gyro Z-axis data

14.18 GYRO_DATA_Z0

Name: GYRO_DATA_Z0 Address: 42 (2Ah) Serial IF: SYNCR Reset value: 0x00 Clock Domain: SCLK_UI		
BIT	**NAME**	**FUNCTION**
7:0	GYRO_DATA_Z[7:0]	Lower byte of Gyro Z-axis data

14.19 TMST_FSYNCH

Name: TMST_FSYNCH Address: 43 (2Bh) Serial IF: SYNCR Reset value: 0x00 Clock Domain: SCLK_UI		
BIT	**NAME**	**FUNCTION**
7:0	TMST_FSYNC_DATA_UI[15:8]	Stores the upper byte of the time delta from the rising edge of FSYNC to the latest ODR until the UI Interface reads the FSYNC tag in the status register

14.20 TMST_FSYNCL

Name: TMST_FSYNCL Address: 44 (2Ch) Serial IF: SYNCR Reset value: 0x00 Clock Domain: SCLK_UI		
BIT	**NAME**	**FUNCTION**
7:0	TMST_FSYNC_DATA_UI[7:0]	Stores the lower byte of the time delta from the rising edge of FSYNC to the latest ODR until the UI Interface reads the FSYNC tag in the status register

14.21 INT_STATUS

Name: INT_STATUS Address: 45 (2Dh) Serial IF: R/C Reset value: 0x10 Clock Domain: SCLK_UI		
BIT	**NAME**	**FUNCTION**
7	-	Reserved
6	UI_FSYNC_INT	This bit automatically sets to 1 when a UI FSYNC interrupt is generated. The bit clears to 0 after the register has been read.
5	PLL_RDY_INT	This bit automatically sets to 1 when a PLL Ready interrupt is generated. The bit clears to 0 after the register has been read.
4	RESET_DONE_INT	This bit automatically sets to 1 when software reset is complete. The bit clears to 0 after the register has been read.
3	DATA_RDY_INT	This bit automatically sets to 1 when a Data Ready interrupt is generated. The bit clears to 0 after the register has been read.
2	FIFO_THS_INT	This bit automatically sets to 1 when the FIFO buffer reaches the threshold value. The bit clears to 0 after the register has been read.
1	FIFO_FULL_INT	This bit automatically sets to 1 when the FIFO buffer is full. The bit clears to 0 after the register has been read.
0	AGC_RDY_INT	This bit automatically sets to 1 when an AGC Ready interrupt is generated. The bit clears to 0 after the register has been read.

14.22 FIFO_COUNTH

Name: FIFO_COUNTH Address: 46 (2Eh) Serial IF: R Reset value: 0x00 Clock Domain: SCLK_UI		
BIT	**NAME**	**FUNCTION**
7:0	FIFO_COUNT[15:8]	High Bits, count indicates the number of records or bytes available in FIFO according to FIFO_COUNT_REC setting. Reading this byte latches the data for both FIFO_COUNTH, and FIFO_COUNTL.

14.23 FIFO_COUNTL

Name: FIFO_COUNTL Address: 47 (2Fh) Serial IF: R Reset value: 0x00 Clock Domain: SCLK_UI		
BIT	**NAME**	**FUNCTION**
7:0	FIFO_COUNT[7:0]	Low Bits, count indicates the number of records or bytes available in FIFO according to FIFO_COUNT_REC setting. Note: Must read FIFO_COUNTH to latch new data for both FIFO_COUNTH and FIFO_COUNTL.

14.24 FIFO_DATA

Name: FIFO_DATA Address: 48 (30h) Serial IF: R Reset value: 0xFF Clock Domain: SCLK_UI		
BIT	**NAME**	**FUNCTION**
7:0	FIFO_DATA	FIFO data port

14.25 APEX_DATA0

Name: APEX_DATA0 Address: 49 (31h) Serial IF: SYNCR Reset value: 0x00 Clock Domain: SCLK_UI		
BIT	**NAME**	**FUNCTION**
7:0	STEP_CNT[7:0]	Pedometer Output: Lower byte of Step Count measured by pedometer

14.26 APEX_DATA1

Name: APEX_DATA1 Address: 50 (32h) Serial IF: SYNCR Reset value: 0x00 Clock Domain: SCLK_UI		
BIT	**NAME**	**FUNCTION**
7:0	STEP_CNT[15:8]	Pedometer Output: Upper byte of Step Count measured by pedometer

14.27 APEX_DATA2

Name: APEX_DATA2 Address: 51 (33h) Serial IF: R Reset value: 0x00 Clock Domain: SCLK_UI		
BIT	**NAME**	**FUNCTION**
7:0	STEP_CADENCE	Pedometer Output: Walk/run cadency in number of samples. Format is u6.2. e.g. At 50Hz ODR and 2Hz walk frequency, the cadency is 25 samples. The register will output 100.

14.28 APEX_DATA3

Name: APEX_DATA3 Address: 52 (34h) Serial IF: R Reset value: 0x04 Clock Domain: SCLK_UI		
BIT	**NAME**	**FUNCTION**
7:3	-	Reserved
2	DMP_IDLE	0: Indicates DMP is running 1: Indicates DMP is idle
1:0	ACTIVITY_CLASS	Pedometer Output: Detected activity 00: Unknown 01: Walk 10: Run 11: Reserved

14.29 APEX_DATA4

Name: APEX_DATA4 Address: 53 (35h) Serial IF: R Reset value: 0x00 Clock Domain: SCLK_UI		
BIT	**NAME**	**FUNCTION**
7:5	-	Reserved
4:3	TAP_NUM	Tap Detection Output: Number of taps in the current Tap event 00: No tap 01: Single tap 10: Double tap 11: Reserved
2:1	TAP_AXIS	Tap Detection Output: Represents the accelerometer axis on which tap energy is concentrated 00: X-axis 01: Y-axis 10: Z-axis 11: Reserved
0	TAP_DIR	Tap Detection Output: Polarity of tap pulse 0: Current accelerometer value – Previous accelerometer value is a positive value 1: Current accelerometer value – Previous accelerometer value is a negative value or zero

14.30 APEX_DATA5

Name: APEX_DATA5 Address: 54 (36h) Serial IF: R Reset value: 0x00 Clock Domain: SCLK_UI		
BIT	**NAME**	**FUNCTION**
7:6	-	Reserved
5:0	DOUBLE_TAP_TIMING	DOUBLE_TAP_TIMING measures the time interval between the two taps when double tap is detected. It counts every 16 accelerometer samples as one unit between the 2 tap pulses. Therefore, the value is related to the accelerometer ODR. Time in seconds = DOUBLE_TAP_TIMING * 16 / ODR For example, if the accelerometer ODR is 500 Hz, and the DOUBLE_TAP_TIMING register reading is 6, the time interval value is 6*16/500 = 0.192 seconds.

14.31 INT_STATUS2

Name: INT_STATUS2 Address: 55 (37h) Serial IF: R/C Reset value: 0x00 Clock Domain: SCLK_UI		
BIT	**NAME**	**FUNCTION**
7:4	-	Reserved
3	SMD_INT	Significant Motion Detection Interrupt, clears on read
2	WOM_Z_INT	Wake on Motion Interrupt on Z-axis, clears on read
1	WOM_Y_INT	Wake on Motion Interrupt on Y-axis, clears on read
0	WOM_X_INT	Wake on Motion Interrupt on X-axis, clears on read

14.32 INT_STATUS3

Name: INT_STATUS3 Address: 56 (38h) Serial IF: R/C Reset value: 0x00 Clock Domain: SCLK_UI		
BIT	**NAME**	**FUNCTION**
7:6	-	Reserved
5	STEP_DET_INT	Step Detection Interrupt, clears on read
4	STEP_CNT_OVF_INT	Step Count Overflow Interrupt, clears on read
3	TILT_DET_INT	Tilt Detection Interrupt, clears on read
2	WAKE_INT	Wake Event Interrupt, clears on read
1	SLEEP_INT	Sleep Event Interrupt, clears on read
0	TAP_DET_INT	Tap Detection Interrupt, clears on read

14.33 SIGNAL_PATH_RESET

Name: SIGNAL_PATH_RESET Address: 75 (4Bh) Serial IF: W/C Reset value: 0x00 Clock Domain: SCLK_UI		
BIT	**NAME**	**FUNCTION**
7	-	Reserved
6	DMP_INIT_EN	When this bit is set to 1, the DMP is enabled
5	DMP_MEM_RESET_EN	When this bit is set to 1, the DMP memory is reset
4	-	Reserved
3	ABORT_AND_RESET	When this bit is set to 1, the signal path is reset by restarting the ODR counter and signal path controls
2	TMST_STROBE	When this bit is set to 1, the time stamp counter is latched into the time stamp register. This is a write on clear bit.
1	FIFO_FLUSH	When set to 1, FIFO will get flushed.
0	-	Reserved

14.34 INTF_CONFIG0

Name: INTF_CONFIG0
Address: 76 (4Ch)
Serial IF: R/W
Reset value: 0x30
Clock Domain: SCLK_UI

BIT	NAME	FUNCTION

7	FIFO_HOLD_LAST_DATA_EN	This bit selects the treatment of invalid samples. See **Invalid Data Generation** note below this register description.
		
		Setting this bit to 0:
		
		In order to signal an invalid sample, and to differentiate it from a valid sample based on values only:
		
		Sense Registers:
		• Do not receive invalid samples. They hold the last valid sample. Repeated reading before new sample received will yield copies of the last valid sample.
		• Valid samples of values -32768, -32767 are replaced with -32766
		• FSYNC Tagging can modify the least significant bit and further limit values (see section 12.8).
		
		FIFO:
		• 16-bit FIFO packet: Same as Sense Registers, except:
		  ○ FSYNC tagging is not applied to data in FIFO.
		• 20-bit FIFO packet:
		  ○ Invalid samples are indicated with the value -524288
		  ○ Valid samples in {-524288 to -524258} are replaced by -524256
		  ○ Valid Gyro samples: All Even numbers in { -524256 to +524286}
		  ○ Valid Accel samples: All numbers divisible by 4 in {-524256 to +524284}
		  ○ FSYNC tagging is not applied to data in FIFO.
		
		Setting this bit to 1:
		
		Sense registers:
		• Do not receive invalid samples. They hold the last valid sample. Repeated reading before new sample received will yield copies of the last valid sample.
		• FSYNC Tagging can modify the least significant bit and further limit values (see section 12.8).
		FIFO:
		• Invalid sample will get copy of last valid sample
		• 16-bit FIFO packet: Same as Sense Registers, except:
		  ○ FSYNC tagging is not applied to data in FIFO.
		• 20-bit FIFO packet:
		  ○ Valid Gyro samples: All Even numbers in {-524288 to +524286}
		  ○ - Valid Accel samples: All numbers divisible by 4 in {-524288 to +524284}
		  ○ FSYNC tagging is not applied to data in FIFO.

6	FIFO_COUNT_REC	0: FIFO count is reported in bytes 1: FIFO count is reported in records (1 record = 16 bytes for header + gyro + accel + temp sensor data + time stamp, or 8 bytes for header + gyro/accel + temp sensor data, or 20 bytes for header + gyro + accel + temp sensor data + time stamp + 20-bit extension data)
5	FIFO_COUNT_ENDIAN	0: FIFO count is reported in Little Endian format 1: FIFO count is reported in Big Endian format (default)
4	SENSOR_DATA_ENDIAN	0: Sensor data is reported in Little Endian format 1: Sensor data is reported in Big Endian format (default)
3:2	-	Reserved
1:0	UI_SIFS_CFG	0x: Reserved 10: Disable SPI 11: Disable I2C

Invalid Data Generation: FIFO/Sense Registers may contain invalid data under the following conditions:

a) From power on reset to first ODR sample of any sensor (accel, gyro, temp sensor)
b) When any sensor is disabled (accel, gyro, temp sensor)
c) When accel and gyro are enabled with different ODRs. In this case, the sensor with lower ODR will generate invalid samples when it has no new data.

Invalid data can take special values or can hold last valid sample received. For -32768 to be used as a flag for invalid accel/gyro samples, the valid accel/gyro sample range is limited in such case as well. Bit 7 of INTF_CONFIG0 controls what values invalid (and valid) samples can take as shown above.

14.35 INTF_CONFIG1

Name: INTF_CONFIG1
Address: 77 (4Dh)
Serial IF: R/W
Reset value: 0x91
Clock Domain: SCLK_UI

BIT	NAME	FUNCTION
7:4	-	Reserved
3	ACCEL_LP_CLK_SEL	0: Accelerometer LP mode uses Wake Up oscillator clock 1: Accelerometer LP mode uses RC oscillator clock
2	RTC_MODE	0: No input RTC clock is required 1: RTC clock input is required
1:0	CLKSEL	00: Always select internal RC oscillator 01: Select PLL when available, else select RC oscillator (default) 10: Reserved 11: Disable all clocks

14.36 PWR_MGMT0

Name: PWR_MGMT0 Address: 78 (4Eh) Serial IF: R/W Reset value: 0x00 Clock Domain: SCLK_UI		
BIT	**NAME**	**FUNCTION**
7:6	-	Reserved
5	TEMP_DIS	0: Temperature sensor is enabled (default) 1: Temperature sensor is disabled
4	IDLE	If this bit is set to 1, the RC oscillator is powered on even if Accel and Gyro are powered off. Nominally this bit is set to 0, so when Accel and Gyro are powered off, the chip will go to OFF state, since the RC oscillator will also be powered off
3:2	GYRO_MODE	00: Turns gyroscope off (default) 01: Places gyroscope in Standby Mode 10: Reserved 11: Places gyroscope in Low Noise (LN) Mode Gyroscope needs to be kept ON for a minimum of 45ms. When transitioning from OFF to any of the other modes, do not issue any register writes for 200µs.
1:0	ACCEL_MODE	00: Turns accelerometer off (default) 01: Turns accelerometer off 10: Places accelerometer in Low Power (LP) Mode 11: Places accelerometer in Low Noise (LN) Mode When transitioning from OFF to any of the other modes, do not issue any register writes for 200µs.

14.37 GYRO_CONFIG0

Name: GYRO_CONFIG0 Address: 79 (4Fh) Serial IF: R/W Reset value: 0x06 Clock Domain: SCLK_UI		
BIT	**NAME**	**FUNCTION**
7:5	GYRO_FS_SEL	Full scale select for gyroscope UI interface output 000: ±2000dps (default) 001: ±1000dps 010: ±500dps 011: ±250dps 100: ±125dps 101: ±62.5dps 110: ±31.25dps 111: ±15.625dps
4	-	Reserved
3:0	GYRO_ODR	Gyroscope ODR selection for UI interface output 0000: Reserved 0001: 32kHz 0010: 16kHz 0011: 8kHz 0100: 4kHz 0101: 2kHz 0110: 1kHz (default) 0111: 200Hz 1000: 100Hz 1001: 50Hz 1010: 25Hz 1011: 12.5Hz 1100: Reserved 1101: Reserved 1110: Reserved 1111: 500Hz

14.38 ACCEL_CONFIG0

Name: ACCEL_CONFIG0 Address: 80 (50h) Serial IF: R/W Reset value: 0x06 Clock Domain: SCLK_UI		
BIT	**NAME**	**FUNCTION**
7:5	ACCEL_FS_SEL	Full scale select for accelerometer UI interface output 000: ±16g (default) 001: ±8g 010: ±4g 011: ±2g 100: Reserved 101: Reserved 110: Reserved 111: Reserved
4	-	Reserved
3:0	ACCEL_ODR	Accelerometer ODR selection for UI interface output 0000: Reserved 0001: 32kHz (LN mode) 0010: 16kHz (LN mode) 0011: 8kHz (LN mode) 0100: 4kHz (LN mode) 0101: 2kHz (LN mode) 0110: 1kHz (LN mode) (default) 0111: 200Hz (LP or LN mode) 1000: 100Hz (LP or LN mode) 1001: 50Hz (LP or LN mode) 1010: 25Hz (LP or LN mode) 1011: 12.5Hz (LP or LN mode) 1100: 6.25Hz (LP mode) 1101: 3.125Hz (LP mode) 1110: 1.5625Hz (LP mode) 1111: 500Hz (LP or LN mode)

14.39 GYRO_CONFIG1

Name: GYRO_CONFIG1 Address: 81 (51h) Serial IF: R/W Reset value: 0x16 Clock Domain: SCLK_UI		
BIT	**NAME**	**FUNCTION**
7:5	TEMP_FILT_BW	Sets the bandwidth of the temperature signal DLPF 000: DLPF BW = 4000Hz; DLPF Latency = 0.125ms (default) 001: DLPF BW = 170Hz; DLPF Latency = 1ms 010: DLPF BW = 82Hz; DLPF Latency = 2ms 011: DLPF BW = 40Hz; DLPF Latency = 4ms 100: DLPF BW = 20Hz; DLPF Latency = 8ms 101: DLPF BW = 10Hz; DLPF Latency = 16ms 110: DLPF BW = 5Hz; DLPF Latency = 32ms 111: DLPF BW = 5Hz; DLPF Latency = 32ms
4	-	Reserved
3:2	GYRO_UI_FILT_ORD	Selects order of GYRO UI filter 00: 1st Order 01: 2nd Order 10: 3rd Order 11: Reserved
1:0	GYRO_DEC2_M2_ORD	Selects order of GYRO DEC2_M2 Filter 00: Reserved 01: Reserved 10: 3rd Order 11: Reserved

14.40 GYRO_ACCEL_CONFIG0

Name: GYRO_ACCEL_CONFIG0 Address: 82 (52h) Serial IF: R/W Reset value: 0x11 Clock Domain: SCLK_UI		
BIT	**NAME**	**FUNCTION**
7:4	ACCEL_UI_FILT_BW	**LN Mode:** Bandwidth for Accel LPF 0 BW=ODR/2 1 BW=max(400Hz, ODR)/4 (default) 2 BW=max(400Hz, ODR)/5 3 BW=max(400Hz, ODR)/8 4 BW=max(400Hz, ODR)/10 5 BW=max(400Hz, ODR)/16 6 BW=max(400Hz, ODR)/20 7 BW=max(400Hz, ODR)/40 8 to 13: Reserved 14 Low Latency option: Trivial decimation @ ODR of Dec2 filter output. Dec2 runs at max(400Hz, ODR) 15 Low Latency option: Trivial decimation @ ODR of Dec2 filter output. Dec2 runs at max(200Hz, 8*ODR) **LP Mode:** 0 Reserved 1 1x AVG filter (default) 2 to 5 Reserved 6 16x AVG filter 7 to 15 Reserved
3:0	GYRO_UI_FILT_BW	**LN Mode:** Bandwidth for Gyro LPF 0 BW=ODR/2 1 BW=max(400Hz, ODR)/4 (default) 2 BW=max(400Hz, ODR)/5 3 BW=max(400Hz, ODR)/8 4 BW=max(400Hz, ODR)/10 5 BW=max(400Hz, ODR)/16 6 BW=max(400Hz, ODR)/20 7 BW=max(400Hz, ODR)/40 8 to 13: Reserved 14 Low Latency option: Trivial decimation @ ODR of Dec2 filter output. Dec2 runs at max(400Hz, ODR) 15 Low Latency option: Trivial decimation @ ODR of Dec2 filter output. Dec2 runs at max(200Hz, 8*ODR)

14.41 ACCEL_CONFIG1

Name: ACCEL_CONFIG1 Address: 83 (53h) Serial IF: R/W Reset value: 0x0D Clock Domain: SCLK_UI		
BIT	**NAME**	**FUNCTION**
7:5	-	Reserved
4:3	ACCEL_UI_FILT_ORD	Selects order of ACCEL UI filter 00: 1st Order 01: 2nd Order 10: 3rd Order 11: Reserved
2:1	ACCEL_DEC2_M2_ORD	Order of Accelerometer DEC2_M2 filter 00: Reserved 01: Reserved 10: 3rd order 11: Reserved
0	-	Reserved

14.42 TMST_CONFIG

Name: TMST_CONFIG Address: 84 (54h) Serial IF: R/W Reset value: 0x23 Clock Domain: SCLK_UI		
BIT	**NAME**	**FUNCTION**
7:5	-	Reserved
4	TMST_TO_REGS_EN	0: TMST_VALUE[19:0] read always returns 0s 1: TMST_VALUE[19:0] read returns timestamp value
3	TMST_RES	Time Stamp resolution: When set to 0 (default), time stamp resolution is 1 µs. When set to 1: If RTC is disabled, resolution is 16µs. If RTC is enabled, resolution is 1 RTC clock period
2	TMST_DELTA_EN	Time Stamp delta enable: When set to 1, the time stamp field contains the measurement of time since the last occurrence of ODR.
1	TMST_FSYNC_EN	Time Stamp register FSYNC enable (default). When set to 1, the contents of the Timestamp feature of FSYNC is enabled. The user also needs to select FIFO_TMST_FSYNC_EN in order to propagate the timestamp value to the FIFO.
0	TMST_EN	0: Time Stamp register disable 1: Time Stamp register enable (default)

14.43 APEX_CONFIG0

Name: APEX_CONFIG0
Address: 86 (56h)
Serial IF: R/W
Reset value: 0x82
Clock Domain: SCLK_UI

BIT	NAME	FUNCTION
7	DMP_POWER_SAVE	0: DMP power save mode not active 1: DMP power save mode active (default)
6	TAP_ENABLE	0: Tap Detection not enabled 1: Tap Detection enabled when accelerometer ODR is set to one of the ODR values supported by Tap Detection (200Hz, 500Hz, 1kHz)
5	PED_ENABLE	0: Pedometer not enabled 1: Pedometer enabled
4	TILT_ENABLE	0: Tilt Detection not enabled 1: Tilt Detection enabled
3	R2W_EN	0: Raise to Wake/Sleep not enabled 1: Raise to Wake/Sleep enabled
2	-	Reserved
1:0	DMP_ODR	00: 25Hz 01: Reserved 10: 50Hz 11: Reserved

14.44 SMD_CONFIG

Name: SMD_CONFIG
Address: 87 (57h)
Serial IF: R/W
Reset value: 0x00
Clock Domain: SCLK_UI

BIT	NAME	FUNCTION
7:4	-	Reserved
3	WOM_INT_MODE	0: Set WoM interrupt on the OR of all enabled accelerometer thresholds 1: Set WoM interrupt on the AND of all enabled accelerometer threshold
2	WOM_MODE	0: Initial sample is stored. Future samples are compared to initial sample 1: Compare current sample to previous sample
1:0	SMD_MODE	00: SMD disabled 01: Reserved 10: SMD short (1 sec wait) An SMD event is detected when two WOM are detected 1 sec apart 11: SMD long (3 sec wait) An SMD event is detected when two WOM are detected 3 sec apart

14.45 FIFO_CONFIG1

Name: FIFO_CONFIG1 Address: 95 (5Fh) Serial IF: R/W Reset value: 0x00 Clock Domain: SCLK_UI		
BIT	**NAME**	**FUNCTION**
7	-	Reserved
6	FIFO_RESUME_PARTIAL_RD	0: Partial FIFO read disabled, requires re-reading of the entire FIFO 1: FIFO read can be partial, and resume from last read point
5	FIFO_WM_GT_TH	Trigger FIFO watermark interrupt on every ODR (DMA write) if FIFO_COUNT ≥ FIFO_WM_TH
4	FIFO_HIRES_EN	Enable 3 bytes of extended 20-bits accel, gyro data + 1 byte of extended 16-bit temperature sensor data to be placed into the FIFO
3	FIFO_TMST_FSYNC_EN	Must be set to 1 for all FIFO use cases when FSYNC is used.
2	FIFO_TEMP_EN	Enable temperature sensor packets to go to FIFO
1	FIFO_GYRO_EN	Enable gyroscope packets to go to FIFO
0	FIFO_ACCEL_EN	Enable accelerometer packets to go to FIFO

14.46 FIFO_CONFIG2

Name: FIFO_CONFIG2 Address: 96 (60h) Serial IF: R/W Reset value: 0x00 Clock Domain: SCLK_UI		
BIT	**NAME**	**FUNCTION**
7:0	FIFO_WM[7:0]	Lower bits of FIFO watermark. Generate interrupt when the FIFO reaches or exceeds FIFO_WM size in bytes or records according to FIFO_COUNT_REC setting. Interrupt only fires once. This register should be set to non-zero value, before choosing this interrupt source.

14.47 FIFO_CONFIG3

Name: FIFO_CONFIG3 Address: 97 (61h) Serial IF: R/W Reset value: 0x00 Clock Domain: SCLK_UI		
BIT	**NAME**	**FUNCTION**
7:4	-	Reserved
3:0	FIFO_WM[11:8]	Upper bits of FIFO watermark. Generate interrupt when the FIFO reaches or exceeds FIFO_WM size in bytes or records according to FIFO_COUNT_REC setting. Interrupt only fires once. This register should be set to non-zero value, before choosing this interrupt source.

Note: Do not set FIFO_WM to value 0.

14.48 FSYNC_CONFIG

Name: FSYNC_CONFIG Address: 98 (62h) Serial IF: R/W Reset value: 0x10 Clock Domain: SCLK_UI		
BIT	**NAME**	**FUNCTION**
7	-	Reserved
6:4	FSYNC_UI_SEL	000: Do not tag FSYNC flag 001: Tag FSYNC flag to TEMP_OUT LSB 010: Tag FSYNC flag to GYRO_XOUT LSB 011: Tag FSYNC flag to GYRO_YOUT LSB 100: Tag FSYNC flag to GYRO_ZOUT LSB 101: Tag FSYNC flag to ACCEL_XOUT LSB 110: Tag FSYNC flag to ACCEL_YOUT LSB 111: Tag FSYNC flag to ACCEL_ZOUT LSB
3:2	-	Reserved
1	FSYNC_UI_FLAG_CLEAR_SEL	0: FSYNC flag is cleared when UI sensor register is updated 1: FSYNC flag is cleared when UI interface reads the sensor register LSB of FSYNC tagged axis
0	FSYNC_POLARITY	0: Start from Rising edge of FSYNC pulse to measure FSYNC interval 1: Start from Falling edge of FSYNC pulse to measure FSYNC interval

Please also refer to Section 12.8 for supplementary information on FSYNC tag.

14.49 INT_CONFIG0

Name: INT_CONFIG0 Address: 99 (63h) Serial IF: R/W Reset value: 0x00 Clock Domain: SCLK_UI		
BIT	**NAME**	**FUNCTION**
7:6	-	Reserved
5:4	UI_DRDY_INT_CLEAR	Data Ready Interrupt Clear Option (latched mode) 00: Clear on Status Bit Read (default) 01: Clear on Status Bit Read 10: Clear on Sensor Register Read 11: Clear on Status Bit Read AND on Sensor Register read
3:2	FIFO_THS_INT_CLEAR	FIFO Threshold Interrupt Clear Option (latched mode) 00: Clear on Status Bit Read (default) 01: Clear on Status Bit Read 10: Clear on FIFO data 1Byte Read 11: Clear on Status Bit Read AND on FIFO data 1 byte read
1:0	FIFO_FULL_INT_CLEAR	FIFO Full Interrupt Clear Option (latched mode) 00: Clear on Status Bit Read (default) 01: Clear on Status Bit Read 10: Clear on FIFO data 1Byte Read 11: Clear on Status Bit Read AND on FIFO data 1 byte read

14.50 INT_CONFIG1

Name: INT_CONFIG1 Address: 100 (64h) Serial IF: R/W Reset value: 0x10 Clock Domain: SCLK_UI		
BIT	**NAME**	**FUNCTION**
7	-	Reserved
6	INT_TPULSE_DURATION	Interrupt pulse duration 0: Interrupt pulse duration is 100µs. Use only if ODR < 4kHz. (Default) 1: Interrupt pulse duration is 8 µs. Required if ODR ≥ 4kHz, optional for ODR < 4kHz.
5	INT_TDEASSERT_DISABLE	Interrupt de-assertion duration 0: The interrupt de-assertion duration is set to a minimum of 100µs. Use only if ODR < 4kHz. (Default) 1: Disables de-assert duration. Required if ODR ≥ 4kHz, optional for ODR < 4kHz.
4	INT_ASYNC_RESET	User should change setting to 0 from default setting of 1, for proper INT1 and INT2 pin operation
3:0	-	Reserved

14.51 INT_SOURCE0

Name: INT_SOURCE0 Address: 101 (65h) Serial IF: R/W Reset value: 0x10 Clock Domain: SCLK_UI		
BIT	**NAME**	**FUNCTION**
7	-	Reserved
6	UI_FSYNC_INT1_EN	0: UI FSYNC interrupt not routed to INT1 1: UI FSYNC interrupt routed to INT1
5	PLL_RDY_INT1_EN	0: PLL ready interrupt not routed to INT1 1: PLL ready interrupt routed to INT1
4	RESET_DONE_INT1_EN	0: Reset done interrupt not routed to INT1 1: Reset done interrupt routed to INT1
3	UI_DRDY_INT1_EN	0: UI data ready interrupt not routed to INT1 1: UI data ready interrupt routed to INT1
2	FIFO_THS_INT1_EN	0: FIFO threshold interrupt not routed to INT1 1: FIFO threshold interrupt routed to INT1
1	FIFO_FULL_INT1_EN	0: FIFO full interrupt not routed to INT1 1: FIFO full interrupt routed to INT1
0	UI_AGC_RDY_INT1_EN	0: UI AGC ready interrupt not routed to INT1 1: UI AGC ready interrupt routed to INT1

14.52 INT_SOURCE1

Name: INT_SOURCE1 Address: 102 (66h) Serial IF: R/W Reset value: 0x00 Clock Domain: SCLK_UI		
BIT	**NAME**	**FUNCTION**
7	-	Reserved
6	I3C_PROTOCOL_ERROR_INT1_EN	0: I3C^{SM} protocol error interrupt not routed to INT1 1: I3C^{SM} protocol error interrupt routed to INT1
5:4	-	Reserved
3	SMD_INT1_EN	0: SMD interrupt not routed to INT1 1: SMD interrupt routed to INT1
2	WOM_Z_INT1_EN	0: Z-axis WOM interrupt not routed to INT1 1: Z-axis WOM interrupt routed to INT1
1	WOM_Y_INT1_EN	0: Y-axis WOM interrupt not routed to INT1 1: Y-axis WOM interrupt routed to INT1
0	WOM_X_INT1_EN	0: X-axis WOM interrupt not routed to INT1 1: X-axis WOM interrupt routed to INT1

14.53 INT_SOURCE3

Name: INT_SOURCE3 Address: 104 (68h) Serial IF: R/W Reset value: 0x00 Clock Domain: SCLK_UI		
BIT	**NAME**	**FUNCTION**
7	-	Reserved
6	UI_FSYNC_INT2_EN	0: UI FSYNC interrupt not routed to INT2 1: UI FSYNC interrupt routed to INT2
5	PLL_RDY_INT2_EN	0: PLL ready interrupt not routed to INT2 1: PLL ready interrupt routed to INT2
4	RESET_DONE_INT2_EN	0: Reset done interrupt not routed to INT2 1: Reset done interrupt routed to INT2
3	UI_DRDY_INT2_EN	0: UI data ready interrupt not routed to INT2 1: UI data ready interrupt routed to INT2
2	FIFO_THS_INT2_EN	0: FIFO threshold interrupt not routed to INT2 1: FIFO threshold interrupt routed to INT2
1	FIFO_FULL_INT2_EN	0: FIFO full interrupt not routed to INT2 1: FIFO full interrupt routed to INT2
0	UI_AGC_RDY_INT2_EN	0: UI AGC ready interrupt not routed to INT2 1: UI AGC ready interrupt routed to INT2

14.54 INT_SOURCE4

Name: INT_SOURCE4 Address: 105 (69h) Serial IF: R/W Reset value: 0x00 Clock Domain: SCLK_UI		
BIT	**NAME**	**FUNCTION**
7	-	Reserved
6	I3C_PROTOCOL_ERROR_INT2_EN	0: I3C^{SM} protocol error interrupt not routed to INT2 1: I3C^{SM} protocol error interrupt routed to INT2
5:4	-	Reserved
3	SMD_INT2_EN	0: SMD interrupt not routed to INT2 1: SMD interrupt routed to INT2
2	WOM_Z_INT2_EN	0: Z-axis WOM interrupt not routed to INT2 1: Z-axis WOM interrupt routed to INT2
1	WOM_Y_INT2_EN	0: Y-axis WOM interrupt not routed to INT2 1: Y-axis WOM interrupt routed to INT2
0	WOM_X_INT2_EN	0: X-axis WOM interrupt not routed to INT2 1: X-axis WOM interrupt routed to INT2

14.55 FIFO_LOST_PKT0

Name: FIFO_LOST_PKT0 Address: 108 (6Ch) Serial IF: R Reset value: 0x00 Clock Domain: SCLK_UI		
BIT	**NAME**	**FUNCTION**
7:0	FIFO_LOST_PKT_CNT[7:0]	Low byte, number of packets lost in the FIFO

14.56 FIFO_LOST_PKT1

Name: FIFO_LOST_PKT1 Address: 109 (6Dh) Serial IF: R Reset value: 0x00 Clock Domain: SCLK_UI		
BIT	**NAME**	**FUNCTION**
7:0	FIFO_LOST_PKT_CNT[15:8]	High byte, number of packets lost in the FIFO

14.57 SELF_TEST_CONFIG

Name: SELF_TEST_CONFIG Address: 112 (70h) Serial IF: R/W Reset value: 0x00 Clock Domain: SCLK_UI		
BIT	**NAME**	**FUNCTION**
7	-	Reserved
6	ACCEL_ST_POWER	Set to 1 for accel self-test Otherwise set to 0; Set to 0 after self-test is completed
5	EN_AZ_ST	Enable Z-accel self-test
4	EN_AY_ST	Enable Y-accel self-test
3	EN_AX_ST	Enable X-accel self-test
2	EN_GZ_ST	Enable Z-gyro self-test
1	EN_GY_ST	Enable Y-gyro self-test
0	EN_GX_ST	Enable X-gyro self-test

14.58 WHO_AM_I

Name: WHO_AM_I Address: 117 (75h) Serial IF: R Reset value: 0x47 Clock Domain: SCLK_UI		
BIT	**NAME**	**FUNCTION**
7:0	WHOAMI	Register to indicate to user which device is being accessed

Description:

This register is used to verify the identity of the device. The contents of WHOAMI is an 8-bit device ID. The default value of the register is 0x47. This is different from the I^2C address of the device as seen on the slave I^2C controller by the applications processor.

14.59 REG_BANK_SEL

Note: This register is accessible from all register banks

Name: REG_BANK_SEL Address: 118 (76h) Serial IF: R/W Reset value: 0x00 Clock Domain: ALL		
BIT	**NAME**	**FUNCTION**
7:3	-	Reserved
2:0	BANK_SEL	Register bank selection 000: Bank 0 (default) 001: Bank 1 010: Bank 2 011: Bank 3 100: Bank 4 101: Reserved 110: Reserved 111: Reserved

15 USER BANK 1 REGISTER MAP – DESCRIPTIONS

This section describes the function and contents of each register within USR Bank 1.

15.1 SENSOR_CONFIG0

Name: SENSOR_CONFIG0
Address: 03 (03h)
Serial IF: R/W
Reset value: 0x80
Clock Domain: SCLK_UI

BIT	NAME	FUNCTION
7:6	-	Reserved
5	ZG_DISABLE	0: Z gyroscope is on 1: Z gyroscope is disabled
4	YG_DISABLE	0: Y gyroscope is on 1: Y gyroscope is disabled
3	XG_DISABLE	0: X gyroscope is on 1: X gyroscope is disabled
2	ZA_DISABLE	0: Z accelerometer is on 1: Z accelerometer is disabled
1	YA_DISABLE	0: Y accelerometer is on 1: Y accelerometer is disabled
0	XA_DISABLE	0: X accelerometer is on 1: X accelerometer is disabled

15.2 GYRO_CONFIG_STATIC2

Name: GYRO_CONFIG_STATIC2
Address: 11 (0Bh)
Serial IF: R/W
Reset value: 0xA0
Clock Domain: SCLK_UI

BIT	NAME	FUNCTION
7:2	-	Reserved
1	GYRO_AAF_DIS	0: Enable gyroscope anti-aliasing filter (default) 1: Disable gyroscope anti-aliasing filter
0	GYRO_NF_DIS	0: Enable Notch Filter (default) 1: Disable Notch Filter

15.3 GYRO_CONFIG_STATIC3

Name: GYRO_CONFIG_STATIC3
Address: 12 (0Ch)
Serial IF: R/W
Reset value: 0x0D
Clock Domain: SCLK_UI

BIT	NAME	FUNCTION
7:6	-	Reserved
5:0	GYRO_AAF_DELT	Controls bandwidth of the gyroscope anti-alias filter See section 5.2 for details

15.4 GYRO_CONFIG_STATIC4

Name: GYRO_CONFIG_STATIC4 Address: 13 (0Dh) Serial IF: R/W Reset value: 0xAA Clock Domain: SCLK_UI		
BIT	**NAME**	**FUNCTION**
7:0	GYRO_AAF_DELTSQR[7:0]	Controls bandwidth of the gyroscope anti-alias filter See section 5.2 for details

15.5 GYRO_CONFIG_STATIC5

Name: GYRO_CONFIG_STATIC5 Address: 14 (0Eh) Serial IF: R/W Reset value: 0x80 Clock Domain: SCLK_UI		
BIT	**NAME**	**FUNCTION**
7:4	GYRO_AAF_BITSHIFT	Controls bandwidth of the gyroscope anti-alias filter See section 5.2 for details
3:0	GYRO_AAF_DELTSQR[11:8]	Controls bandwidth of the gyroscope anti-alias filter See section 5.2 for details

15.6 GYRO_CONFIG_STATIC6

Name: GYRO_CONFIG_STATIC6 Address: 15 (0Fh) Serial IF: R/W Reset value: 0xXX (Factory trimmed on an individual device basis) Clock Domain: SCLK_UI		
BIT	**NAME**	**FUNCTION**
7:0	GYRO_X_NF_COSWZ[7:0]	Used for gyroscope X-axis notch filter frequency selection See section 5.1 for details

15.7 GYRO_CONFIG_STATIC7

Name: GYRO_CONFIG_STATIC7 Address: 16 (10h) Serial IF: R/W Reset value: 0xXX (Factory trimmed on an individual device basis) Clock Domain: SCLK_UI		
BIT	**NAME**	**FUNCTION**
7:0	GYRO_Y_NF_COSWZ[7:0]	Used for gyroscope Y-axis notch filter frequency selection See section 5.1 for details

15.8 GYRO_CONFIG_STATIC8

Name: GYRO_CONFIG_STATIC8 Address: 17 (11h) Serial IF: R/W Reset value: 0xXX (Factory trimmed on an individual device basis) Clock Domain: SCLK_UI		
BIT	**NAME**	**FUNCTION**
7:0	GYRO_Z_NF_COSWZ[7:0]	Used for gyroscope Z-axis notch filter frequency selection See section 5.1 for details

15.9 GYRO_CONFIG_STATIC9

Name: GYRO_CONFIG_STATIC9 Address: 18 (12h) Serial IF: R/W Reset value: 0xXX (Factory trimmed on an individual device basis) Clock Domain: SCLK_UI		
BIT	**NAME**	**FUNCTION**
7:6	-	Reserved
5	GYRO_Z_NF_COSWZ_SEL[0]	Used for gyroscope Z-axis notch filter frequency selection See section 5.1 for details
4	GYRO_Y_NF_COSWZ_SEL[0]	Used for gyroscope Y-axis notch filter frequency selection See section 5.1 for details
3	GYRO_X_NF_COSWZ_SEL[0]	Used for gyroscope X-axis notch filter frequency selection See section 5.1 for details
2	GYRO_Z_NF_COSWZ[8]	Used for gyroscope Z-axis notch filter frequency selection See section 5.1 for details
1	GYRO_Y_NF_COSWZ[8]	Used for gyroscope Y-axis notch filter frequency selection See section 5.1 for details
0	GYRO_X_NF_COSWZ[8]	Used for gyroscope X-axis notch filter frequency selection See section 5.1 for details

15.10 GYRO_CONFIG_STATIC10

Name: GYRO_CONFIG_STATIC10 Address: 19 (13h) Serial IF: R/W Reset value: 0x11 Clock Domain: SCLK_UI		
BIT	**NAME**	**FUNCTION**
7	-	Reserved
6:4	GYRO_NF_BW_SEL	Selects bandwidth for gyroscope notch filter See section 5.1 for details
3:0	-	Reserved

15.11 XG_ST_DATA

Name: XG_ST_DATA
Address: 95 (5Fh)
Serial IF: R/W
Reset value: 0xXX (The value in this register indicates the self-test output generated during manufacturing tests)
Clock Domain: SCLK_UI

BIT	NAME	FUNCTION
7:0	XG_ST_DATA	X-gyro self-test data

15.12 YG_ST_DATA

Name: YG_ST_DATA
Address: 96 (60h)
Serial IF: R/W
Reset value: 0xXX (The value in this register indicates the self-test output generated during manufacturing tests)
Clock Domain: SCLK_UI

BIT	NAME	FUNCTION
7:0	YG_ST_DATA	Y-gyro self-test data

15.13 ZG_ST_DATA

Name: ZG_ST_DATA
Address: 97 (61h)
Serial IF: R/W
Reset value: 0xXX (The value in this register indicates the self-test output generated during manufacturing tests)
Clock Domain: SCLK_UI

BIT	NAME	FUNCTION
7:0	ZG_ST_DATA	Z-gyro self-test data

15.14 TMSTVAL0

Name: TMSTVAL0
Address: 98 (62h)
Serial IF: R
Reset value: 0x00
Clock Domain: SCLK_UI

BIT	NAME	FUNCTION
7:0	TMST_VALUE[7:0]	When TMST_STROBE is programmed, the current value of the internal counter is latched to this register. Allows the full 20-bit precision of the time stamp to be read back.

15.15 TMSTVAL1

Name: TMSTVAL1 Address: 99 (63h) Serial IF: R Reset value: 0x00 Clock Domain: SCLK_UI		
BIT	**NAME**	**FUNCTION**
7:0	TMST_VALUE[15:8]	When TMST_STROBE is programmed, the current value of the internal counter is latched to this register. Allows the full 20-bit precision of the time stamp to be read back.

15.16 TMSTVAL2

Name: TMSTVAL2 Address: 100 (64h) Serial IF: R Reset value: 0x00 Clock Domain: SCLK_UI		
BIT	**NAME**	**FUNCTION**
7:4	-	Reserved
3:0	TMST_VALUE[19:16]	When TMST_STROBE is programmed, the current value of the internal counter is latched to this register. Allows the full 20-bit precision of the time stamp to be read back.

15.17 INTF_CONFIG4

Name: INTF_CONFIG4 Address: 122 (7Ah) Serial IF: R/W Reset value: 0x83 Clock Domain: SCLK_UI		
BIT	**NAME**	**FUNCTION**
7:2	-	Reserved
6	I3C_BUS_MODE	0: Device is on a bus with I^2C and $I3C^{SM}$ devices 1: Device is on a bus with $I3C^{SM}$ devices only
5:2	-	Reserved
1	SPI_AP_4WIRE	0: AP interface uses 3-wire SPI mode 1: AP interface uses 4-wire SPI mode (default)
0	-	Reserved

15.18 INTF_CONFIG5

Name: INTF_CONFIG5 Address: 123 (7Bh) Serial IF: R/W Reset value: 0x00 Clock Domain: SCLK_UI		
BIT	**NAME**	**FUNCTION**
7:3	-	Reserved
2:1	PIN9_FUNCTION	Selects among the following functionalities for pin 9 00: INT2 01: FSYNC 10: CLKIN 11: Reserved
0	-	Reserved

15.19 INTF_CONFIG6

Name: INTF_CONFIG6 Address: 124 (7Ch) Serial IF: R/W Reset value: 0x5F Clock Domain: SCLK_UI		
BIT	**NAME**	**FUNCTION**
7	ASYNCTIME0_DIS	0: I3C^{SM}Asynchronous Mode 0 timing control is enabled 1: I3C^{SM} Asynchronous Mode 0 timing control is disabled
6:5	-	Reserved
4	I3C_EN	0: I3C^{SM} slave not enabled 1: I3C^{SM} slave enabled
3	I3C_IBI_BYTE_EN	0: I3C^{SM} IBI payload function not enabled 1: I3C^{SM} IBI payload function enabled
2	I3C_IBI_EN	0: I3C^{SM} IBI function not enabled 1: I3C^{SM} IBI function enabled
1	I3C_DDR_EN	0: I3C^{SM} DDR mode not enabled 1: I3C^{SM} DDR mode enabled
0	I3C_SDR_EN	0: I3C^{SM} SDR mode not enabled 1: I3C^{SM} SDR mode enabled

16 USER BANK 2 REGISTER MAP – DESCRIPTIONS

This section describes the function and contents of each register within USR Bank 2.

16.1 ACCEL_CONFIG_STATIC2

Name: ACCEL_CONFIG_STATIC2
Address: 03 (03h)
Serial IF: R/W
Reset value: 0x30
Clock Domain: SCLK_UI

BIT	NAME	FUNCTION
7	-	Reserved
6:1	ACCEL_AAF_DELT	Controls bandwidth of the accelerometer anti-alias filter See section 5.2 for details
0	ACCEL_AAF_DIS	0: Enable accelerometer anti-aliasing filter (default) 1: Disable accelerometer anti-aliasing filter

16.2 ACCEL_CONFIG_STATIC3

Name: ACCEL_CONFIG_STATIC3
Address: 04 (04h)
Serial IF: R/W
Reset value: 0x40
Clock Domain: SCLK_UI

BIT	NAME	FUNCTION
7:0	ACCEL_AAF_DELTSQR[7:0]	Controls bandwidth of the accelerometer anti-alias filter See section 5.2 for details

16.3 ACCEL_CONFIG_STATIC4

Name: ACCEL_CONFIG_STATIC4
Address: 05 (05h)
Serial IF: R/W
Reset value: 0x62
Clock Domain: SCLK_UI

BIT	NAME	FUNCTION
7:4	ACCEL_AAF_BITSHIFT	Controls bandwidth of the accelerometer anti-alias filter See section 5.2 for details
3:0	ACCEL_AAF_DELTSQR[11:8]	Controls bandwidth of the accelerometer anti-alias filter See section 5.2 for details

16.4 XA_ST_DATA

Name: XA_ST_DATA
Address: 59 (3Bh)
Serial IF: R/W
Reset value: 0xXX (The value in this register indicates the self-test output generated during manufacturing tests)
Clock Domain: SCLK_UI

BIT	NAME	FUNCTION
7:0	XA_ST_DATA	X-accel self-test data

16.5 YA_ST_DATA

Name: YA_ST_DATA Address: 60 (3Ch) Serial IF: R/W Reset value: 0xXX (The value in this register indicates the self-test output generated during manufacturing tests) Clock Domain: SCLK_UI		
BIT	**NAME**	**FUNCTION**
7:0	YA_ST_DATA	Y-accel self-test data

16.6 ZA_ST_DATA

Name: ZA_ST_DATA Address: 61 (3Dh) Serial IF: R/W Reset value: 0xXX (The value in this register indicates the self-test output generated during manufacturing tests) Clock Domain: SCLK_UI		
BIT	**NAME**	**FUNCTION**
7:0	ZA_ST_DATA	Z-accel self-test data

17 USER BANK 4 REGISTER MAP – DESCRIPTIONS

This section describes the function and contents of each register within USR Bank 4.

17.1 APEX_CONFIG1

Name: APEX_CONFIG1 Address: 64 (40h) Serial IF: R/W Reset value: 0xA2 Clock Domain: SCLK_UI		
BIT	**NAME**	**FUNCTION**
7:4	LOW_ENERGY_AMP_TH_SEL	Pedometer Low Energy mode amplitude threshold selection Use default value 1010b
3:0	DMP_POWER_SAVE_TIME_SEL	When the DMP is in power save mode, it is awakened by the WOM and will wait for a certain duration before going back to sleep. This bitfield configures this duration. 0000: 0 seconds 0001: 4 seconds 0010: 8 seconds 0011: 12 seconds 0100: 16 seconds 0101: 20 seconds 0110: 24 seconds 0111: 28 seconds 1000: 32 seconds 1001: 36 seconds 1010: 40 seconds 1011: 44 seconds 1100: 48 seconds 1101: 52 seconds 1110: 56 seconds 1111: 60 seconds

17.2 APEX_CONFIG2

Name: APEX_CONFIG2 Address: 65 (41h) Serial IF: R/W Reset value: 0x85 Clock Domain: SCLK_UI		
BIT	**NAME**	**FUNCTION**
7:4	PED_AMP_TH_SEL	Pedometer amplitude threshold selection Use default value 1000b
3:0	PED_STEP_CNT_TH_SEL	Pedometer step count detection window Use default value 0101b 0000: 0 steps 0001: 1 step 0010: 2 steps 0011: 3 steps 0100: 4 steps 0101: 5 steps (default) 0110: 6 steps 0111: 7 steps 1000: 8 steps 1001: 9 steps 1010: 10 steps 1011: 11 steps 1100: 12 steps 1101: 13 steps 1110: 14 steps 1111: 15 steps

17.3 APEX_CONFIG3

Name: APEX_CONFIG3 Address: 66 (42h) Serial IF: R/W Reset value: 0x51 Clock Domain: SCLK_UI		
BIT	**NAME**	**FUNCTION**
7:5	PED_STEP_DET_TH_SEL	Pedometer step detection threshold selection Use default value 010b 000: 0 steps 001: 1 step 010: 2 steps (default) 011: 3 steps 100: 4 steps 101: 5 steps 110: 6 steps 111: 7 steps
4:2	PED_SB_TIMER_TH_SEL	Pedometer step buffer timer threshold selection Use default value 100b 000: 0 samples 001: 1 sample 010: 2 samples 011: 3 samples 100: 4 samples (default) 101: 5 samples 110: 6 samples 111: 7 samples
1:0	PED_HI_EN_TH_SEL	Pedometer high energy threshold selection Use default value 01b

17.4 APEX_CONFIG4

Name: APEX_CONFIG4 Address: 67 (43h) Serial IF: R/W Reset value: 0xA4 Clock Domain: SCLK_UI		
BIT	**NAME**	**FUNCTION**
7:6	TILT_WAIT_TIME_SEL	Configures duration of delay after tilt is detected before interrupt is triggered 00: 0s 01: 2s 10: 4s (default) 11: 6s
5:3	SLEEP_TIME_OUT	Configures the time out for sleep detection, for Raise to Wake/Sleep feature 000: 1.28sec 001: 2.56sec 010: 3.84sec 011: 5.12sec 100: 6.40sec 101: 7.68sec 110: 8.96sec 111: 10.24sec
2:0	-	Reserved

17.5 APEX_CONFIG5

Name: APEX_CONFIG5 Address: 68 (44h) Serial IF: R/W Reset value: 0x8C Clock Domain: SCLK_UI		
BIT	**NAME**	**FUNCTION**
7:3	-	Reserved
2:0	MOUNTING_MATRIX	Defines mounting matrix, chip to device frame 000: [1 0 0; 0 1 0; 0 0 1] 001: [1 0 0; 0 -1 0; 0 0 -1] 010: [-1 0 0; 0 1 0; 0 0 -1] 011: [-1 0 0; 0 -1 0; 0 0 1] 100: [0 1 0; 1 0 0; 0 0 -1] 101: [0 1 0; -1 0 0; 0 0 1] 110: [0 -1 0; 1 0 0; 0 0 1] 111: [0 -1 0; -1 0 0; 0 0 -1]

17.6 APEX_CONFIG6

Name: APEX_CONFIG6 Address: 69 (45h) Serial IF: R/W Reset value: 0x5C Clock Domain: SCLK_UI		
BIT	**NAME**	**FUNCTION**
7:3	-	Reserved
2:0	SLEEP_GESTURE_DELAY	Configures detection window for sleep gesture detection 000: 0.32sec 001: 0.64sec 010: 0.96sec 011: 1.28sec 100: 1.60sec 101: 1.92sec 110: 2.24sec 111: 2.56sec

17.7 APEX_CONFIG7

Name: APEX_CONFIG7 Address: 70 (46h) Serial IF: R/W Reset value: 0x45 Clock Domain: SCLK_UI		
BIT	**NAME**	**FUNCTION**
7:2	TAP_MIN_JERK_THR	Tap Detection minimum jerk threshold Use default value 010001b
1:0	TAP_MAX_PEAK_TOL	Tap Detection maximum peak tolerance Use default value 01b

17.8 APEX_CONFIG8

Name: APEX_CONFIG8 Address: 71 (47h) Serial IF: R/W Reset value: 0x5B Clock Domain: SCLK_UI		
BIT	**NAME**	**FUNCTION**
7	-	Reserved
6:5	TAP_TMAX	Tap measurement window (number of samples) Use default value 01b
4:3	TAP_TAVG	Tap energy measurement window (number of samples) Use default value 01b
2:0	TAP_TMIN	Single tap window (number of samples) Use default value 011b

17.9 APEX_CONFIG9

Name: APEX_CONFIG9 Address: 72 (48h) Serial IF: R/W Reset value: 0x00 Clock Domain: SCLK_UI		
BIT	**NAME**	**FUNCTION**
7:1	-	Reserved
0	SENSITIVITY_MODE	0: Low power mode at accelerometer ODR 25Hz; High performance mode at accelerometer ODR ≥ 50Hz 1: Low power and slow walk mode at accelerometer ODR 25Hz; Slow walk mode at accelerometer ODR ≥ 50Hz

17.10 ACCEL_WOM_X_THR

Name: ACCEL_WOM_X_THR Address: 74 (4Ah) Serial IF: R/W Reset value: 0x00 Clock Domain: SCLK_UI		
BIT	**NAME**	**FUNCTION**
7:0	WOM_X_TH	Threshold value for the Wake on Motion Interrupt for X-axis accelerometer WoM thresholds are expressed in fixed “mg” independent of the selected Range [0g : 1g]; Resolution 1g/256=~3.9mg

17.11 ACCEL_WOM_Y_THR

Name: ACCEL_WOM_Y_THR Address: 75 (4Bh) Serial IF: R/W Reset value: 0x00 Clock Domain: SCLK_UI		
BIT	**NAME**	**FUNCTION**
7:0	WOM_Y_TH	Threshold value for the Wake on Motion Interrupt for Y-axis accelerometer WoM thresholds are expressed in fixed “mg” independent of the selected Range [0g : 1g]; Resolution 1g/256=~3.9mg

17.12 ACCEL_WOM_Z_THR

Name: ACCEL_WOM_Z_THR Address: 76 (4Ch) Serial IF: R/W Reset value: 0x00 Clock Domain: SCLK_UI		
BIT	**NAME**	**FUNCTION**
7:0	WOM_Z_TH	Threshold value for the Wake on Motion Interrupt for Z-axis accelerometer WoM thresholds are expressed in fixed “mg” independent of the selected Range [0g : 1g]; Resolution 1g/256=~3.9mg

17.13 INT_SOURCE6

Name: INT_SOURCE6 Address: 77 (4Dh) Serial IF: R/W Reset value: 0x00 Clock Domain: SCLK_UI		
BIT	**NAME**	**FUNCTION**
7:6	-	Reserved
5	STEP_DET_INT1_EN	0: Step detect interrupt not routed to INT1 1: Step detect interrupt routed to INT1
4	STEP_CNT_OFL_INT1_EN	0: Step count overflow interrupt not routed to INT1 1: Step count overflow interrupt routed to INT1
3	TILT_DET_INT1_EN	0: Tilt detect interrupt not routed to INT1 1: Tile detect interrupt routed to INT1
2	WAKE_DET_INT1_EN	0: Wake detect interrupt not routed to INT1 1: Wake detect interrupt routed to INT1
1	SLEEP_DET_INT1_EN	0: Sleep detect interrupt not routed to INT1 1: Sleep detect interrupt routed to INT1
0	TAP_DET_INT1_EN	0: Tap detect interrupt not routed to INT1 1: Tap detect interrupt routed to INT1

17.14 INT_SOURCE7

Name: INT_SOURCE7 Address: 78 (4Eh) Serial IF: R/W Reset value: 0x00 Clock Domain: SCLK_UI		
BIT	**NAME**	**FUNCTION**
7:6	-	Reserved
5	STEP_DET_INT2_EN	0: Step detect interrupt not routed to INT2 1: Step detect interrupt routed to INT2
4	STEP_CNT_OFL_INT2_EN	0: Step count overflow interrupt not routed to INT2 1: Step count overflow interrupt routed to INT2
3	TILT_DET_INT2_EN	0: Tilt detect interrupt not routed to INT2 1: Tile detect interrupt routed to INT2
2	WAKE_DET_INT2_EN	0: Wake detect interrupt not routed to INT2 1: Wake detect interrupt routed to INT2
1	SLEEP_DET_INT2_EN	0: Sleep detect interrupt not routed to INT2 1: Sleep detect interrupt routed to INT2
0	TAP_DET_INT2_EN	0: Tap detect interrupt not routed to INT2 1: Tap detect interrupt routed to INT2

17.15 INT_SOURCE8

Name: INT_SOURCE8 Address: 79 (4Fh) Serial IF: R/W Reset value: 0x00 Clock Domain: SCLK_UI		
BIT	**NAME**	**FUNCTION**
7:6	-	Reserved
5	FSYNC_IBI_EN	0: FSYNC interrupt not routed to IBI 1: FSYNC interrupt routed to IBI
4	PLL_RDY_IBI_EN	0: PLL ready interrupt not routed to IBI 1: PLL ready interrupt routed to IBI
3	UI_DRDY_IBI_EN	0: UI data ready interrupt not routed to IBI 1: UI data ready interrupt routed to IBI
2	FIFO_THS_IBI_EN	0: FIFO threshold interrupt not routed to IBI 1: FIFO threshold interrupt routed to IBI
1	FIFO_FULL_IBI_EN	0: FIFO full interrupt not routed to IBI 1: FIFO full interrupt routed to IBI
0	AGC_RDY_IBI_EN	0: AGC ready interrupt not routed to IBI 1: AGC ready interrupt routed to IBI

17.16 INT_SOURCE9

Name: INT_SOURCE9 Address: 80 (50h) Serial IF: R/W Reset value: 0x00 Clock Domain: SCLK_UI		
BIT	**NAME**	**FUNCTION**
7	I3C_PROTOCOL_ERROR_IBI_EN	0: I3C^{SM} protocol error interrupt not routed to IBI 1: I3C^{SM} protocol error interrupt routed to IBI
6:5	-	Reserved
4	SMD_IBI_EN	0: SMD interrupt not routed to IBI 1: SMD interrupt routed to IBI
3	WOM_Z_IBI_EN	0: Z-axis WOM interrupt not routed to IBI 1: Z-axis WOM interrupt routed to IBI
2	WOM_Y_IBI_EN	0: Y-axis WOM interrupt not routed to IBI 1: Y-axis WOM interrupt routed to IBI
1	WOM_X_IBI_EN	0: X-axis WOM interrupt not routed to IBI 1: X-axis WOM interrupt routed to IBI
0	-	Reserved

17.17 INT_SOURCE10

Name: INT_SOURCE10 Address: 81 (51h) Serial IF: R/W Reset value: 0x00 Clock Domain: SCLK_UI		
BIT	**NAME**	**FUNCTION**
7:6	-	Reserved
5	STEP_DET_IBI_EN	0: Step detect interrupt not routed to IBI 1: Step detect interrupt routed to IBI
4	STEP_CNT_OFL_IBI_EN	0: Step count overflow interrupt not routed to IBI 1: Step count overflow interrupt routed to IBI
3	TILT_DET_IBI_EN	0: Tilt detect interrupt not routed to IBI 1: Tile detect interrupt routed to IBI
2	WAKE_DET_IBI_EN	0: Wake detect interrupt not routed to IBI 1: Wake detect interrupt routed to IBI
1	SLEEP_DET_IBI_EN	0: Sleep detect interrupt not routed to IBI 1: Sleep detect interrupt routed to IBI
0	TAP_DET_IBI_EN	0: Tap detect interrupt not routed to IBI 1: Tap detect interrupt routed to IBI

17.18 OFFSET_USER0

Name: OFFSET_USER0 Address: 119 (77h) Serial IF: R/W Reset value: 0x00 Clock Domain: SCLK_UI		
BIT	**NAME**	**FUNCTION**
7:0	GYRO_X_OFFUSER[7:0]	Lower bits of X-gyro offset programmed by user. Max value is ±64 dps, resolution is 1/32 dps.

17.19 OFFSET_USER1

Name: OFFSET_USER1 Address: 120 (78h) Serial IF: R/W Reset value: 0x00 Clock Domain: SCLK_UI		
BIT	**NAME**	**FUNCTION**
7:4	GYRO_Y_OFFUSER[11:8]	Upper bits of Y-gyro offset programmed by user. Max value is ±64 dps, resolution is 1/32 dps.
3:0	GYRO_X_OFFUSER[11:8]	Upper bits of X-gyro offset programmed by user. Max value is ±64 dps, resolution is 1/32 dps.

17.20 OFFSET_USER2

Name: OFFSET_USER2 Address: 121 (79h) Serial IF: R/W Reset value: 0x00 Clock Domain: SCLK_UI		
BIT	**NAME**	**FUNCTION**
7:0	GYRO_Y_OFFUSER[7:0]	Lower bits of Y-gyro offset programmed by user. Max value is ±64 dps, resolution is 1/32 dps.

17.21 OFFSET_USER3

Name: OFFSET_USER3 Address: 122 (7Ah) Serial IF: R/W Reset value: 0x00 Clock Domain: SCLK_UI		
BIT	**NAME**	**FUNCTION**
7:0	GYRO_Z_OFFUSER[7:0]	Lower bits of Z-gyro offset programmed by user. Max value is ±64 dps, resolution is 1/32 dps.

17.22 OFFSET_USER4

Name: OFFSET_USER4 Address: 123 (7Bh) Serial IF: R/W Reset value: 0x00 Clock Domain: SCLK_UI		
BIT	**NAME**	**FUNCTION**
7:4	ACCEL_X_OFFUSER[11:8]	Upper bits of X-accel offset programmed by user. Max value is ±1g, resolution is 0.5mg.
3:0	GYRO_Z_OFFUSER[11:8]	Upper bits of Z-gyro offset programmed by user. Max value is ±64 dps, resolution is 1/32 dps.

17.23 OFFSET_USER5

Name: OFFSET_USER5 Address: 124 (7Ch) Serial IF: R/W Reset value: 0x00 Clock Domain: SCLK_UI		
BIT	**NAME**	**FUNCTION**
7:0	ACCEL_X_OFFUSER[7:0]	Lower bits of X-accel offset programmed by user. Max value is ±1g, resolution is 0.5mg.

17.24 OFFSET_USER6

Name: OFFSET_USER6 Address: 125 (7Dh) Serial IF: R/W Reset value: 0x00 Clock Domain: SCLK_UI		
BIT	**NAME**	**FUNCTION**
7:0	ACCEL_Y_OFFUSER[7:0]	Lower bits of Y-accel offset programmed by user. Max value is ±1g, resolution is 0.5mg.

17.25 OFFSET_USER7

Name: OFFSET_USER7 Address: 126 (7Eh) Serial IF: R/W Reset value: 0x00 Clock Domain: SCLK_UI		
BIT	**NAME**	**FUNCTION**
7:4	ACCEL_Z_OFFUSER[11:8]	Upper bits of Z-accel offset programmed by user. Max value is ±1g, resolution is 0.5mg.
3:0	ACCEL_Y_OFFUSER[11:8]	Upper bits of Y-accel offset programmed by user. Max value is ±1g, resolution is 0.5mg.

17.26 OFFSET_USER8

Name: OFFSET_USER8 Address: 127 (7Fh) Serial IF: R/W Reset value: 0x00 Clock Domain: SCLK_UI		
BIT	**NAME**	**FUNCTION**
7:0	ACCEL_Z_OFFUSER[7:0]	Lower bits of Z-accel offset programmed by user. Max value is ±1g, resolution is 0.5mg.

18 REFERENCE

Please refer to "InvenSense MEMS Handling Application Note (AN-IVS-0002A-00)" for the following information:

- Manufacturing Recommendations
  - Assembly Guidelines and Recommendations
  - PCB Design Guidelines and Recommendations
  - MEMS Handling Instructions
  - ESD Considerations
  - Reflow Specification
  - Storage Specifications
  - Package Marking Specification
  - Tape & Reel Specification
  - Reel & Pizza Box Label
  - Packaging
  - Representative Shipping Carton Label
- Compliance
  - Environmental Compliance
  - DRC Compliance
  - Compliance Declaration Disclaimer

19 DOCUMENT INFORMATION

19.1 REVISION HISTORY

Revision Date	Revision	Description
11/18/2019	1.0	Initial Release
03/02/2020	1.1	Added product overview page (Page 1); Updated Conditions in Tables 1 and 2; Updated SPI timing characteristics specs (Tables 6, 7); Updated SPI interface description (Section 9.6)
04/19/2020	1.2	Updated specification notes (Tables 1, 2, 3, 4); Updated absolute maximum ratings (Table 8)
08/28/2020	1.3	Updated Internal Clock Source and Notes (Table 4); Added SPI SCLK Fall Time/Rise Time (Tables 6, 7); Updated APEX Hardware Initialization for Pedometer Programming (Section 8.3); Updated I3C^{SM} Interface information (Section 9.2); Added Use Note 12.9 (Register Values Modification); Added ASYNCTIME0_DIS information (Sections 13.2, 15.19)
09/28/2020	1.4	Added Section 3.7 RTC (CLKIN) Timing Characterization
05/05/2021	1.5	Updated FIFO Timestamp Interval Scaling (Section 12.7); Updated TMST_RES register field description (Section 14.42)
06/20/2021	1.6	Updated FIFO_COUNTH and FIFO_COUNTL description (Section 14.22, 14.23)

This information furnished by InvenSense, Inc. ("InvenSense") is believed to be accurate and reliable. However, no responsibility is assumed by InvenSense for its use, or for any infringements of patents or other rights of third parties that may result from its use. Specifications are subject to change without notice. InvenSense reserves the right to make changes to this product, including its circuits and software, in order to improve its design and/or performance, without prior notice. InvenSense makes no warranties, neither expressed nor implied, regarding the information and specifications contained in this document. InvenSense assumes no responsibility for any claims or damages arising from information contained in this document, or from the use of products and services detailed therein. This includes, but is not limited to, claims or damages based on the infringement of patents, copyrights, mask work and/or other intellectual property rights.

Certain intellectual property owned by InvenSense and described in this document is patent protected. No license is granted by implication or otherwise under any patent or patent rights of InvenSense. This publication supersedes and replaces all information previously supplied. Trademarks that are registered trademarks are the property of their respective companies. InvenSense sensors should not be used or sold in the development, storage, production or utilization of any conventional or mass-destructive weapons or for any other weapons or life threatening applications, as well as in any other life critical applications such as medical equipment, transportation, aerospace and nuclear instruments, undersea equipment, power plant equipment, disaster prevention and crime prevention equipment.

©2021 InvenSense. All rights reserved. InvenSense, MotionTracking, MotionProcessing, MotionProcessor, MotionFusion, MotionApps, DMP, AAR, and the InvenSense logo are trademarks of InvenSense, Inc. The TDK logo is a trademark of TDK Corporation. Other company and product names may be trademarks of the respective companies with which they are associated.

TDK InvenSense

©2021 InvenSense. All rights reserved.