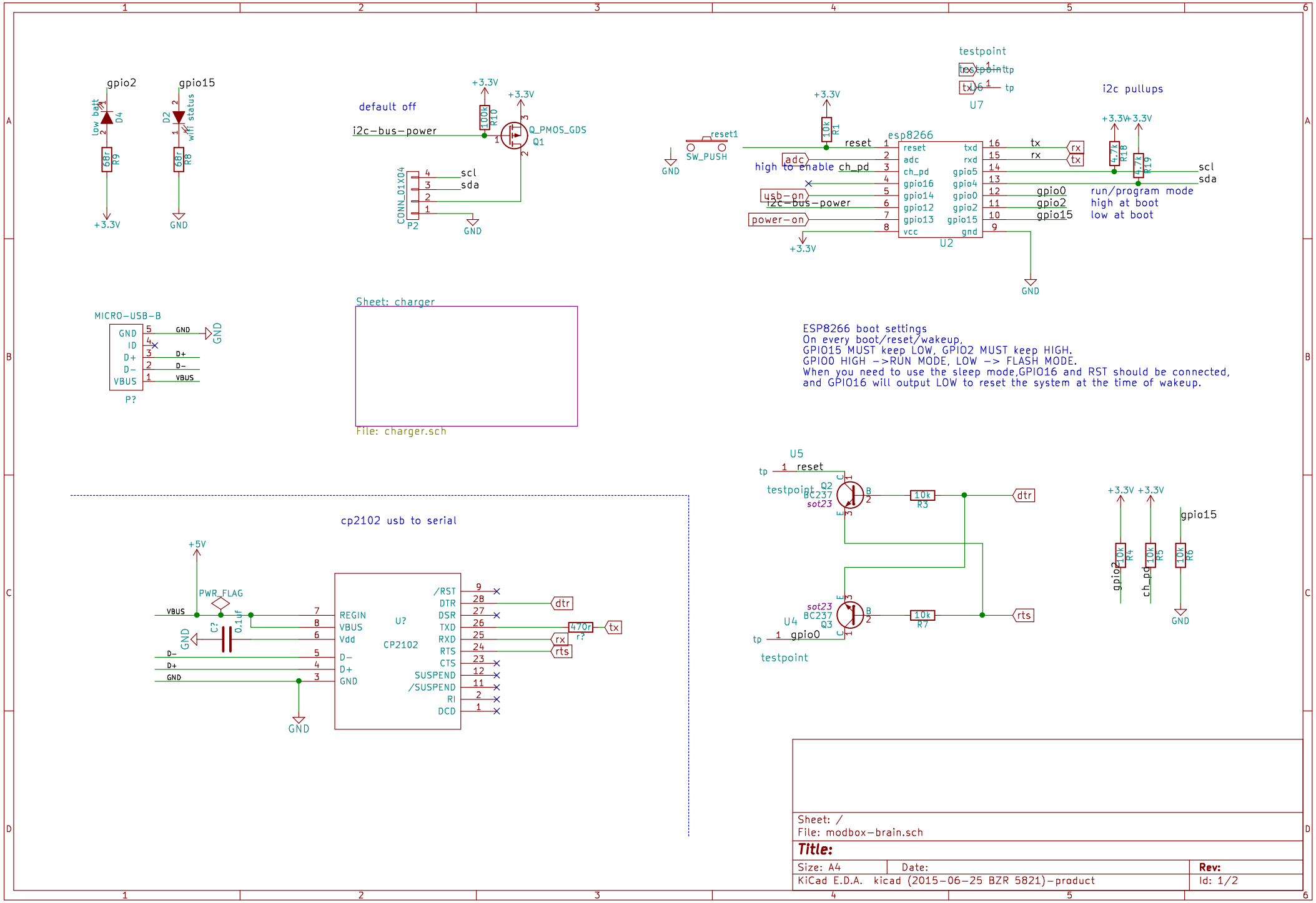
gpio2
gpio15
low batt
D4
D2
wifi status
68r R9
68r R8
+3.3V
GND
default off
i2c-bus-power
+3.3V
100k R10
Q_PMOS_GDS
Q1
CONN_01X04
P2
scl
sda
GND
testpoint
U7
+3.3V
10k R1
reset1
SW_PUSH
GND
reset
adc
high to enable ch_pd
usb-on
i2c-bus-power
power-on
esp8266
U2
reset
adc
ch_pd
gpio16
gpio14
gpio12
gpio13
vcc
txd
rxd
gpio5
gpio4
gpio0
gpio2
gpio15
gnd
tx
rx
gpio0
gpio2
gpio15
i2c pullups
+3.3V
4.7k R18
4.7k R19
scl
sda
run/program mode
high at boot
low at boot
MICRO-USB-B
GND
ID
D+
D-
VBUS
P?
Sheet: charger
File: charger.sch
ESP8266 boot settings
On every boot/reset/wakeup,
GPIO15 MUST keep LOW, GPIO2 MUST keep HIGH.
GPIO0 HIGH ->RUN MODE, LOW -> FLASH MODE.
When you need to use the sleep mode,GPIO16 and RST should be connected,
and GPIO16 will output LOW to reset the system at the time of wakeup.
U5
tp
reset
testpoint
Q2
BC237
sot23
10k R3
dtr
U4
Q3
gpio0
10k R7
rts
+3.3V
gpio15
10k R4
10k R5
10k R6
gpio2
ch_pd
GND
cp2102 usb to serial
+5V
PWR_FLAG
VBUS
C?
0.1uf
GND
D-
D+
REGIN
VBUS
Vdd
U?
CP2102
/RST
DTR
DSR
TXD
RXD
RTS
CTS
SUSPEND
/SUSPEND
RI
DCD
470r
r?
tx
rx
rts
dtr
Sheet: /
File: modbox-brain.sch
Title:
Size: A4
Date:
Rev:
KiCad E.D.A. kicad (2015-06-25 BZR 5821)-product
Id: 1/2

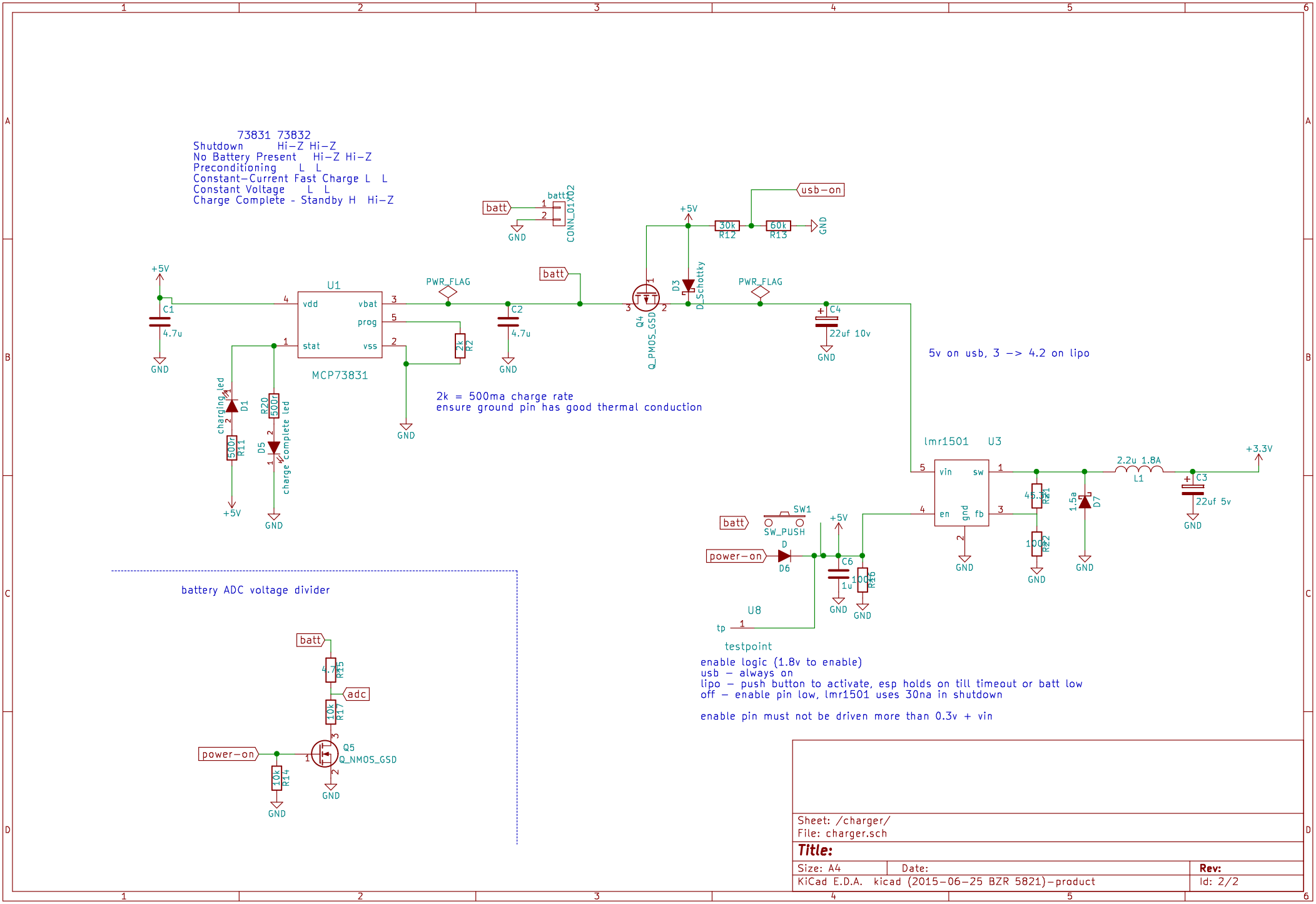
73831 73832
Shutdown Hi-Z Hi-Z
No Battery Present Hi-Z Hi-Z
Preconditioning L L
Constant-Current Fast Charge L L
Constant Voltage L L
Charge Complete - Standby H Hi-Z
batt
CONN_01X02
GND
+5V
usb-on
30k R12
60k R13
U1
vdd
vbat
prog
stat
vss
MCP73831
C1 4.7u
C2 4.7u
PWR_FLAG
2k R2
Q4 Q_PMOS_GSD
D3 D_Schottky
C4 22uf 10v
charging led
D1
500r R11
R20 500r
D5
charge complete led
2k = 500ma charge rate
ensure ground pin has good thermal conduction
5v on usb, 3 -> 4.2 on lipo
lmr1501 U3
vin
sw
en
gnd
fb
+3.3V
2.2u 1.8A
L1
C3 22uf 5v
45.3k R21
100k R22
1.5a D7
SW1
SW_PUSH
power-on
D6
C6 1u
100 R16
U8
tp
testpoint
enable logic (1.8v to enable)
usb - always on
lipo - push button to activate, esp holds on till timeout or batt low
off - enable pin low, lmr1501 uses 30na in shutdown
enable pin must not be driven more than 0.3v + vin
battery ADC voltage divider
4.7 R15
adc
10k R17
Q5 Q_NMOS_GSD
10k R14
Sheet: /charger/
File: charger.sch
Title:
Size: A4
Date:
Rev:
KiCad E.D.A. kicad (2015-06-25 BZR 5821)-product
Id: 2/2