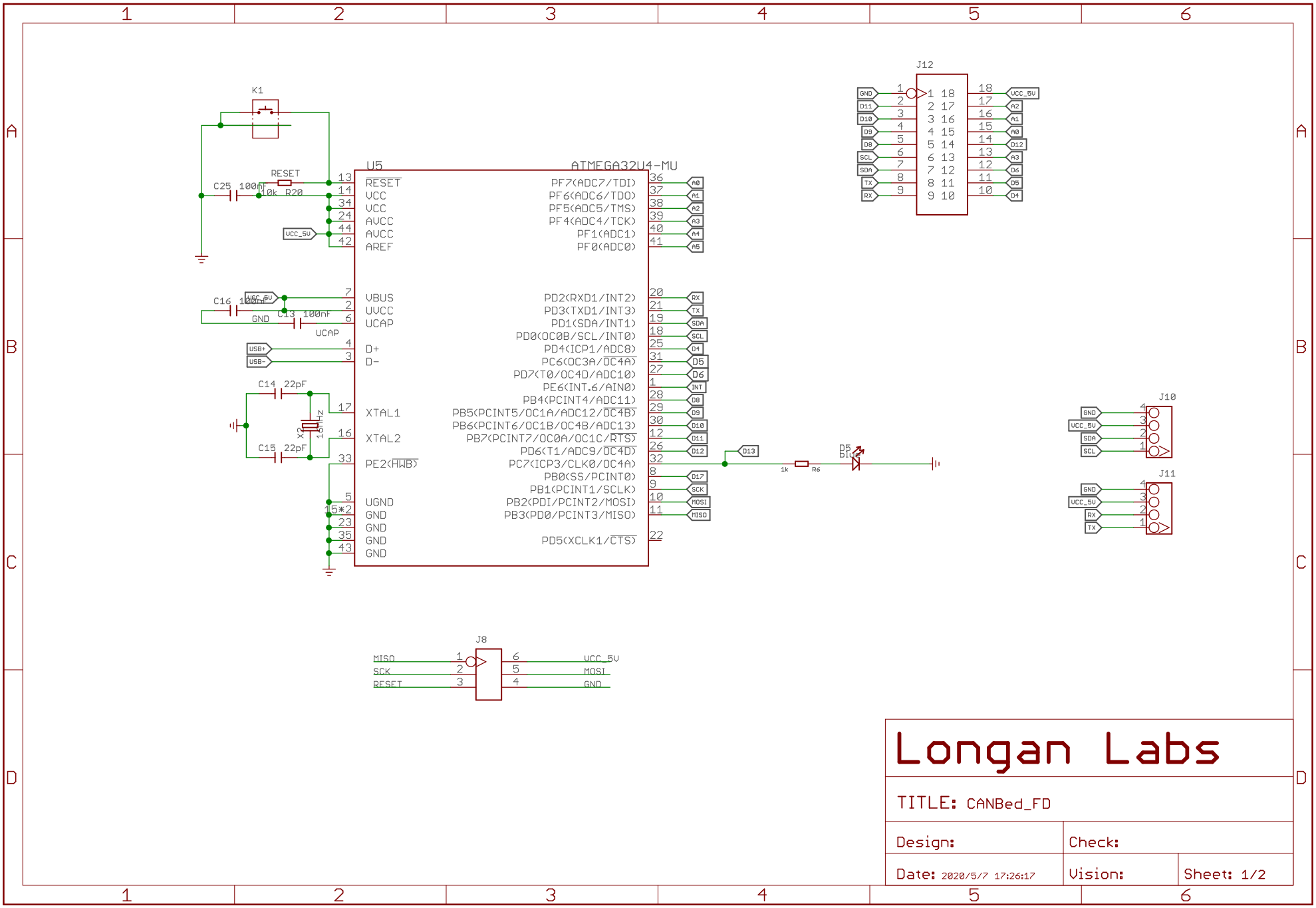
K1
RESET
C25 100nF
10k R20
VCC_5V
U5
ATMEGA32U4-MU
RESET
VCC
VCC
AVCC
AVCC
AREF
VBUS
UVCC
UCAP
D+
D-
XTAL1
XTAL2
PE2(HWB)
UGND
GND
GND
GND
GND
PF7(ADC7/TDI)
PF6(ADC6/TDO)
PF5(ADC5/TMS)
PF4(ADC4/TCK)
PF1(ADC1)
PF0(ADC0)
PD2(RXD1/INT2)
PD3(TXD1/INT3)
PD1(SDA/INT1)
PD0(OC0B/SCL/INT0)
PD4(ICP1/ADC8)
PC6(OC3A/OC4A)
PD7(T0/OC4D/ADC10)
PE6(INT.6/AIN0)
PB4(PCINT4/ADC11)
PB5(PCINT5/OC1A/ADC12/OC4B)
PB6(PCINT6/OC1B/OC4B/ADC13)
PB7(PCINT7/OC0A/OC1C/RTS)
PD6(T1/ADC9/OC4D)
PC7(ICP3/CLK0/OC4A)
PB0(SS/PCINT0)
PB1(PCINT1/SCLK)
PB2(PDI/PCINT2/MOSI)
PB3(PD0/PCINT3/MISO)
PD5(XCLK1/CTS)
C16 100nF
C13 100nF
GND
UCAP
USB+
USB-
C14 22pF
C15 22pF
X1
16MHz
D13
1k R6
D5
J12
J10
J11
J8
MISO
SCK
RESET
VCC_5V
MOSI
GND
Longan Labs
TITLE: CANBed_FD
Design:
Check:
Date: 2020/5/7 17:26:17
Vision:
Sheet: 1/2

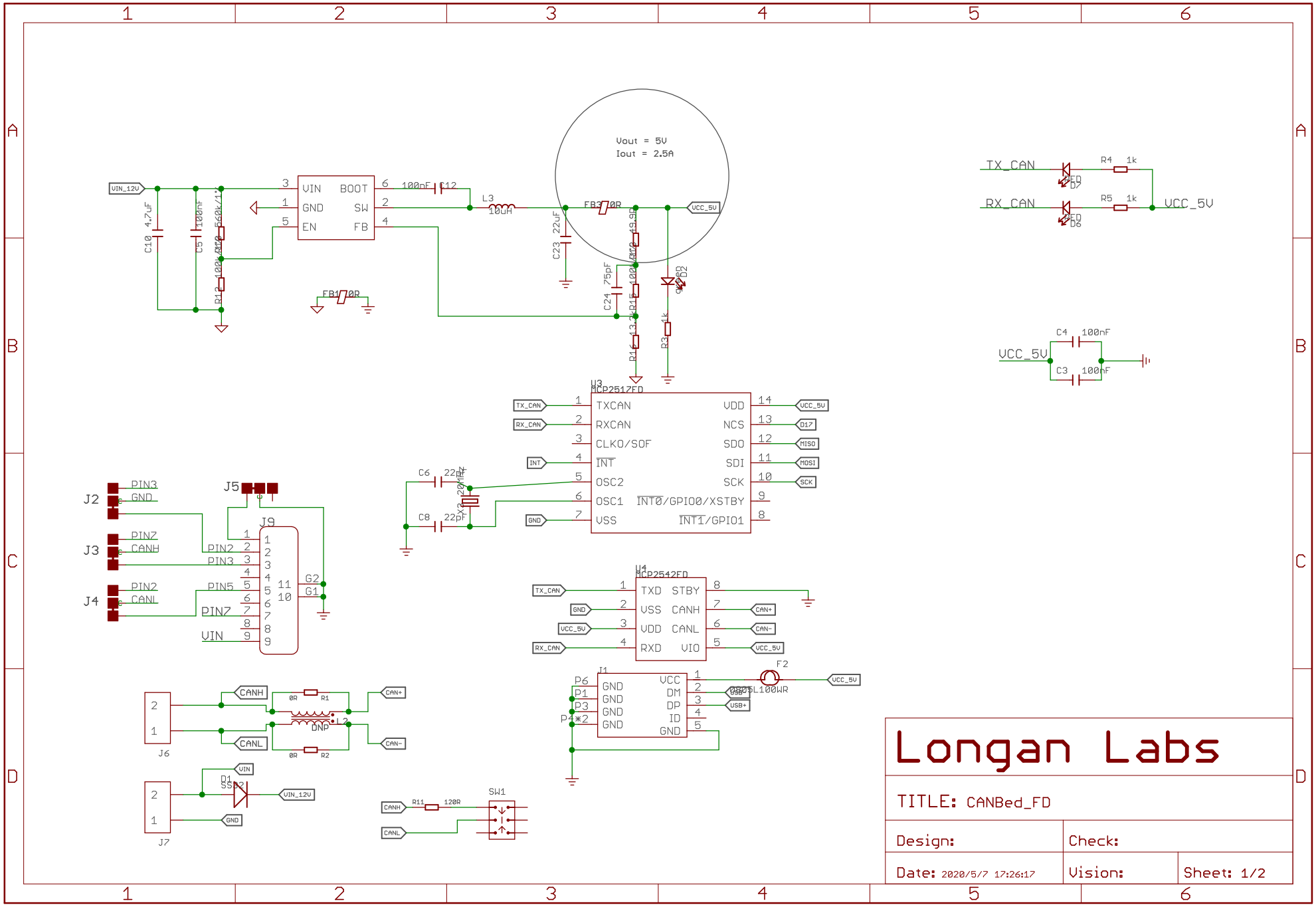

Longan Labs

TITLE: CANBed_FD

Design:	Check:	
Date: 2020/5/7 17:26:17	Vision:	Sheet: 1/2