Short Team Report

Team 2: Low Cost Perfusion Pump

Part IIA: GM1 *Multidisciplinary Design*

Tahmid Azam[1], Luca Buxton[1], India Henry[1], Lonnie McKiernan[1], and Lucy Payne[1]

Mentored by Dr. Peter Long and Prof. Athina E. Markaki

[1]Department of Engineering, University of Cambridge

20 March 2026

Abstract

The bioengineering department are investigating the applications of collagen-based synthetic blood vessels for haemodialysis, involving the measurement of vessel compliance under different pressure profiles. The existing peristaltic pump setup suffers from poor pressure sensor dynamic range, unwanted pressure pulsations requiring extensive compliance tubing, and non-physiological pulse rates.

We propose a dual-syringe pump system driven by stepper motors and lead screws, with voice coil actuators or pinch valves to superimpose a physiological AC waveform onto a steady DC pressure baseline. A PID-based control system running on an ESP32 microcontroller enables real-time waveform tracking, with software providing both GUI and CLI interfaces for experiment configuration and data logging. The estimated prototype cost is under £210, with a final product target of £50 - £100, offering a low-cost, reproducible alternative suitable for parallel graft testing.

1 Clinical motivation

Haemodialysis is the process of removing blood from the body, passing it through a dialyser which filters it, and then returning it, and is indicated in cases of kidney failure. The department wants to create an artifical graft, and is first planning to market it to less-critical medical purposes for a shorter timescale and simpler regulation of the product.

In order to support the high flow rates required for haemodialysis ($> 300\,\mathrm{mL\,min^{-1}}$), arteriovenous (AV) fistulas are commonly surgically formed.

In the elderly population, the formation of AV fistulas can be more challenging due to vessel damage from natural and iatrogenic causes (e.g., repeated blood samples over many years), as well as slow time to maturation[7]. Synthetic vessel grafts help form a AV fistula with a shorter maturation period, or for patients with exhausted vascular access sites[1].

In the case of artificial vessels for uses in bypass grafts, they offer greater availability over the current sources of donor vessels from the great veins of the leg, which may be damaged and require modification in order for arterial applications.

2 Existing laboratory setup and its limitations

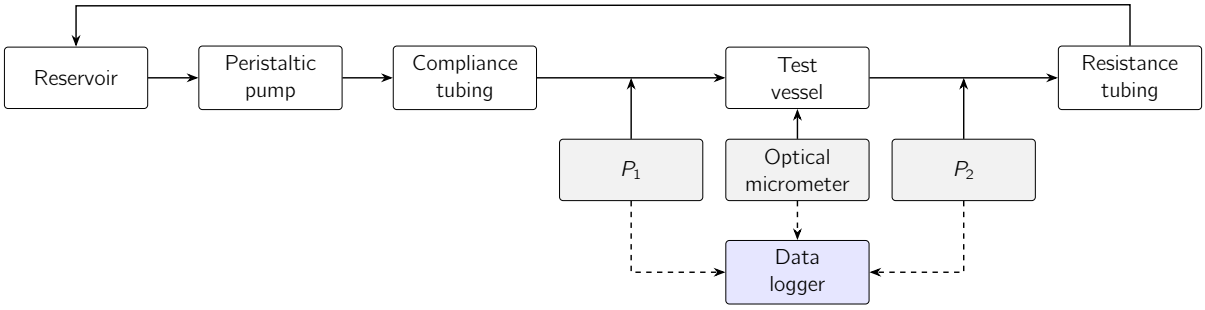

Figure 1: Existing laboratory bench setup.

Figure 1 displays the current laboratory setup bench setup of the perfusion system. The current pump being used is a Kamoer KK1800 peristaltic pump, which uses rollers to occlude sections of the tubing, pushing fluid through the system. This then passes through a section of compliance tubing, to smooth out any pulsations from the peristaltic pump. The flow then enters the perfusion chamber, where the pressure is measured either side of the collagen graft using 100 psi-rated pressure sensors. An optical micrometer is used to monitor diameter changes of the graft, in order to ascertain the average compliance of the grafts. Resistance tubing is required downstream of the test section in order to create a back pressure to set the mean pressure of the flow. The silicone tubing used through the pump has an outer diameter of 8mm, which feeds into tubing of 5mm outer diameter. We have identified some key problem areas of this testing setup:

- The pressure sensors used in the current setup have a large atmospheric pressure offset, resulting in wasted dynamic range.
- The peristaltic pump creates unwanted pressure spikes, so 5 metres of compliance tubing are currently used – this creates a cluttered workspace and a suboptimal way of replicating a physiological pressure profile.
- Achieving flow rates of up to 400mL/min requires un-physiologically large pulse rates of approximately 570 BPM.

3 Design brief

Table 1 shows the specific requirements needed for the pump, as well as their importance.

requirement	value	rationale
Semi-continuous operation	High	Allows for longer testing of grafts, improving understanding of fatigue and leakage.
Mean pressure of 80–120 mmHg	High	Replicates physiological baseline arterial pressure.
Flow remains uncontaminated	High	Enables continuous operation without requiring fluid replacement.
Prevent crushing of blood cells	High	Allows working fluid to be exchanged to blood.
Compatible with a tubing outer diameter of 5 mm	Medium	Improves physiological realism and compatibility with standard laboratory setups.
Produce flow rates up to 400 ml/min	Medium	Enables testing of dialysis-relevant flow rates at realistic heart rates.
Pressure controlled to replicate physiological pulse	Medium	Ensures collected data closely mimics in vivo flow conditions.
Run multiple pumps in parallel	Low	Allows simultaneous testing of multiple grafts.
Replicate flows in different vessels	Low	Provides flexibility for different graft diameters and vessel types.
Display key parameters and allow for modification	Low	Enables user control of mean, systolic, and diastolic pressure, as well as flow rate.

Table 1: System requirements and rationale

4 Proposed system overview

Given the project requirements and desired outputs, the most suitable, low cost design, while having sufficient control was decided to be a dual syringe pump system as shown in Figure 2.

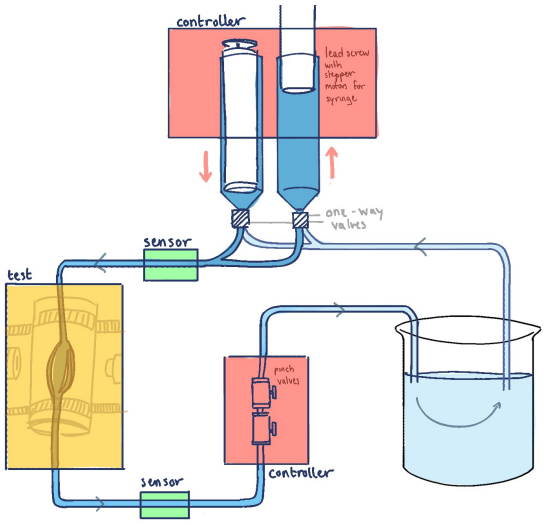

Figure 2: The proposed dual-syringe design.

Two syringes are to be connected up in parallel, each driven by a separate linear drive mechanism consisting of a stepper motor attached to a lead screw via a gearbox. Continuous flow will be generated with one syringe pushing fluid to the test grafts as the other pulls from the reservoir. There will be some overlap with the pushing cycles of the syringes, to avoid a large drop in pressure or flow rate. One-way valves will be placed at the exit of the syringes to prevent backflow, with additional voice coil actuators added downstream of the test region to throttle the flow. These actuators will act to adjust the constant DC pressure output by the syringes, to superimpose the non-standard waveform of the heartbeat. This will more closely match the heart pressure form than the current pump being used. Two pressure sensors will be used for feedback control.

5 Mechanical

5.1 Housing and assembly

The entire pump should be easily reproducible. This means the housing components need to be easily printed and assembled while maintaining a secure fit. Once the configuration of the fluid circuitry is set-up, the housing will be designed in SolidWorks based on these dimensions and 3-D printed. A strong printer filament is required to withstand repeated loading so PETG is recommended, with low brittleness ($> 7\,\%$ elongation at yield [8]) and high bending strength ($> 60\,\mathrm{MPa}$), over say PLA or Resin which would fracture easily under the applied loads. Standard silicon tubing will be used throughout, with a 4 mm to (numerical range) 5 mm internal diameter, using T-type connectors for the pressure sensors.

5.2 Motors and drive system

A stepper motor is well suited for this project, because they are more cost-effective than servos, even if they're less precise. To prevent continuous rotation at the end of each stroke, limit switches will be placed at both ends of the syringe to reverse the motor direction.

A lead screw, either directly coupled or geared, will be used to convert torque from the motor to linear force applied to the syringe. Achieving a flow rate of $400\,\mathrm{mL\,min^{-1}}$ requires a lead screw speed of $\sim$50 RPM (assuming a syringe diameter of 3.56 cm and a pitch of 8 mm). The theoretical plunger force is $\sim$1.6 N, corresponding to $\sim$0.0068 N m of torque, though friction between the plunger and barrel and misalignment of parts may increase this. Therefore, a NEMA 17 stepper motor with 200 steps/rev and a hold torque of 0.17 N m has been chosen. A key issue we predict arising is the motor may miss steps under high load, leading to position error and overshoot. This can be mitigated by increasing torque via a geartrain or a finer-pitch lead screw. For example, running the motor at 500 RPM with a 10:1 reduction provides the required 50 RPM while increasing torque by a factor of 10. This speed is within the range of operation of our chosen stepper motor. However, gearing introduces additional backlash, but this can be reduced using spring-loaded gears [2]. The preliminary stage of development will require different lead screws and gear ratios to be tested in order to achieve the desired flow rates.

5.3 Valves

Further experimenting is required to determine which one-way valve configuration to use at the syringe exits. The first option is to use two cracking-pressure valves at a T-connection, placed in opposite directions. The precise cracking pressure does not need to be tightly specified, provided it is comfortably below the mean operating pressure of 80 mmHg (10.7 kPa, or 0.107 bar). In practice, it would be preferable to select a cracking pressure somewhat below typical capillary pressures of 20 mmHg (2.7 kPa or 0.0267 bar) to allow for potential future testing on various blood vessels. These check valves also help to mimic the physiological heart behaviours, with the semi-lunar valves opening at a certain pressure build up in the ventricles/atria. However more control can be brought to the design using instead a 3/2 valve which can be signalled to shut off flow to either the test grafts or from the reservoir. These can be timed exactly with the pushing of the plunger, but are typically 3x the price of check valves ([9]), so will only be used as an alternative.

5.4 Waveform generation

In order to generate a physiological pressure profile, two methods were investigated. The key features to replicate are the systolic peak and dicrotic notch. Each method was assessed based on its ability to produce the systolic peak, requiring a pressure change of 40 mmHg (5.33 kPa) over approximately 0.1 s.

The first method involves modulating syringe motion by varying the speed of the stepper motor. This changes the flow rate, which, according to Hagen–Poiseuille law, produces corresponding pressure variations. Equation **??**below) estimates that a plunger displacement of $\sim$5 mm is required to achieve this pressure change. While this is a simplified calculation that neglects factors such as plunger friction and manufacturing tolerances, it highlights that the required motion is small, making precise control challenging and likely requiring iterative tuning. Reducing the syringe diameter could increase the required displacement and improve controllability.

The second method uses a pinch valve or voice coil actuator to partially occlude the tubing downstream of the test section. This increases flow resistance and therefore the pressure drop. Using Hagen–Poiseuille law, the required reduction in tube radius is calculated to be 1.31 mm. This would require actuation at approximately 10 Hz with variable compression. A limitation is that pinch valves are typically binary, so a

stiffer, thicker-walled tube may be needed to avoid complete occlusion. A voice coil actuator offers precise, high-speed displacement control, making it better suited for small, rapid compressions. This approach is also advantageous as it decouples the AC pressure component from the DC baseline pressure, allowing a wider range of physiological conditions (e.g. age, sex, cardiac health) to be simulated.

Therefore, a hybrid approach will be adopted. Both pinch valves and voice coil actuators will be evaluated initially. If the required precision proves difficult to achieve, a 20 mL syringe may instead be used to inject pulsatile flow and replicate the desired physiological pressure profile.

5.5 Pressure sensing

requirement	**value**	**rationale**
Operating range	80–120 mmHg	Physiological pressures in blood vessels.
Full range of sensor	150–500 mmHg	Provides burst tolerance and safety margin.
Sensor type	Gauge	Eliminates ∼760 mmHg atmospheric offset, preserving dynamic range and improving resolution.
System placement	After AC and DC implementations	Enables feedback control for both AC and DC components.
Bandwidth	100 Hz	Supports a sampling frequency of 50 Hz, sufficient to accurately track a ∼1 Hz waveform.

Table 2: Pressure sensing requirements and rationale.

6 Software

Through the software, laboratory personnel will be able to choose a pressure profile configuration and schedule of operation, view real-time pressure plots including the error for monitoring, and be able to log/export pressure data. For the lab environment, this would involve both a graphical user interface (GUI) for real-time visualisations and user-friendly changing of preferences and a command-line interface (CLI) for more advanced scripting for reproducible experiments and sharing of configurations, essential for peer-reviewed research. The software should be cross-platform, and support standard file formats for data export (e.g., comma-separated values, CSV). The software should be able to program schedules, such as a ramping mode of operation that slowly increases the pressure to find the bursting point. The software should also flag warnings for error states, such as sudden drops in pressure from a leak (e.g. vessel bursting) or sudden increases in pressure from a blockage (e.g., blockage from a clotting process). Cumulative error, percentage uptime at target pressure should also be monitored for evaluation. Storage demands involve 2.34 kB s^{-1} (3 64 bit floats at 100 Hz), with data transmitted over USB.

6.1 Modelling the pressure profile

There is huge variation in the pressure profile, and the software plans to offer multiple perspectives by which to model the cardiovascular system. Basic controls involve setting target systolic pressures, diastolic pressures, and heart rate. In addition, we can offer easier set up of experiment sets by incorporating normative data that adjusts these physiological variables for age[5], sex[3], level of exercise[10], temperature, and the type of vessel (i.e., distance from the heart, such as artery, capillary, or venule). The chosen configuration and parameters can be exported, stored, or shared as JavaScript Object Notation (JSON) files for repeatability. The mathematical modelling of pressure profiles consists of splitting the target signal into two components: a constant mean DC pressure component, and an AC component. The DC component we model using the Windkessel model[12] and literature values for the Womersley number for different vessel types, sensitive to the aging process[6]. The AC component we emulate by conducting Fourier analysis on literature representations of the cardiac cycle, to capture nuances such as the dicrotic notch.

7 Electrical

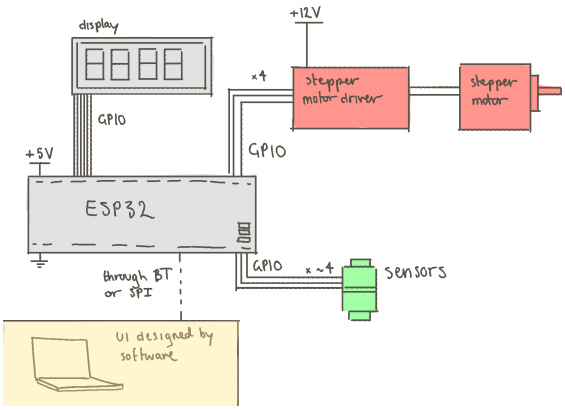

Figure 3: Electrical system diagram.

An ESP32 will be used, this will be cheaper and easier to scale compared to an arduino or RP. The display will be an alphanumeric display, anticipating that connecting the laptop may be more complicated than needed at the start. There will be a maximum of 4 stepper motor drivers. 2 will be used to push the syringes, and the other 2 will be used to open and close valves. These will be connected with general purpose I/O pins. Sensors will also be connected with GPIO. The computer will be connected through bluetooth, SPI, or other protocols like I2C, dependent on which is easiest. SPI will be attempted first. Power will be from the computer (5V) for the microcontroller, and from the wall with an adapter for the 12V needed for the motor driver.

7.1 Timeline

During week 1:

- hours 1-3: Create simple program, like turning on a light when a button is pressed to ensure microcontroller and software for mc - set up properly
- hours 3-5: connect stepper motor driver and motor, without syringe. Create simple code to test. Add syringe, and get power and pressure measurements.
- hours 5-6: connect display, ensure its working.
- hours 6-7: connect display to motor power.
- hours 7-10: connect and test sensors with water.
- hours 10-15: test multiple setups for pump, using different valves and placements of valves.

After this, the work needed to be done is less known. The best setup will be taken, and modelled in Python/MATLAB before being converted into hardware. Errors with sensing and motor control will be fixed.

8 Control

8.1 Objectives and Constraints

The primary objective of this control system is to track a continuously varying pressure waveform in real time, in order to make the pressure waveform received in the test vessel as close as possible to the reference pressure inputted. There is a hard constraint of the maximum safe pressure as vessel bursting is irreversible and expensive. However, the main challenge is handling the system nonlinearities. To name a few, the tubing compliance stores energy, the switching of syringes will create dead zones in the flow, the inertia of the fluid will create a lag, and the stepper motor is hard to keep track of and can slip.

8.2 PID Controller Design

Our solution to this is very fast sampling so that each control step can be approximated as linear. The system will filter (spec TBD) the raw sensor data, then a PID controller will map the error to a change in

motor speed. PID control allows a response to current error, steady state offsets, and damping to prevent overshoots (burst constraint)[11]. The heart waveform is of the order of 1Hz and sampling frequency will be minimum 50Hz. DC and AC need to be controlled separately by motor speed and an AC actuator, the biggest challenge is to model exactly how changing the motor speed and the AC actuator changes the pressure. The PID will run on the microcontroller, and the gains will be initialised from calculations, then tuned manually as the mechanical setup is developed and tested. We may also explore feedforward to reduce lag, and to cope with the syringe changing.

8.3 Extensions

There are a few ways to extend the control system, if there is time. For the lab set up, the system could build a compliance curve across the operating range with pressure and deformation data (from their optical micrometer). The control system could also model burst pressure without ramp to failure (hard to control). The deformation gradient can act as an indicator, with the characteristic final change in compliance being an inflection point to track. This could allow for real time, safer, reproducible burst testing. However the reproducibility depends on the elasticity of the deformation.

9 Bill of materials

item	**link**	**cost ($)**	**qty.**	**notes**
Microcontroller: ESP32 with Bluetooth	Amazon listing	16.58	1	
Stepper motors (NEMA 17)	StepperOnline listing	9.67	4	
Stepper motor driver: TMC2209	Amazon listing	17.99	1 (×6 pack)	
Alphanumeric display	Digi-Key listing	3.70	2	
Pinch valve	Amazon listing	9.99	1 (×5 pack)	6 mm tubing
3/2 ball valve	Amazon listing	7.99	1 (×3 pack)	6 mm tubing
One-way valve	RS listing	7.04	4	6 mm tubing
Syringes (60–100 ml)	UKMedi 60 ml / 100 ml alt.	25.99	5 (set)	
Syringe for testing	Amazon listing	5.59	2	
Silicone tubing	Polymax listing	15.75	5 m min.	5 mm OD, 1 mm wall
Voice coil actuator		30.00	1	10 Hz, 1.31 mm in 0.1 s
total		209.71		

Table 3: Bill of materials.

The breakout board with the microcontroller will already include an LED and switches, as well as being pre-soldered, for quick testing. It will also have bluetooth and different peripherals, like I2C protocols available.

9.1 Final product cost

The final product cost is hard to determine as different configurations may be used. The current estimate is between 50 - 100 pounds, broken down in the table below.

item	qty.	unit cost ($)
microcontroller	1	5–20
motor controller board	1	10–20
lead screw & stepper motor	2	15
pressure sensors	2	3–10
valves	2–6	2
syringes	2	1
tubing	—	—
total		**50–100**

Table 4: Final product cost estimate.

9.2 Departmental resource requests

Within the department, we require:

- 3D printing materials;
- Tubing, if available;
- Pressure sensors (as discussed with Dr. Peter Long), including T-type connectors;
- Lead screw materials;
- Breadboard, including pins;
- Soldering equipment and material; and
- Perfboard (later in timeline).

10 Plan and Timescales

10.1 Partition of work during Lent Term

name	activities
Lonnie	• Researched: – Electrical components and architecture – Types of valves, and feasibility – Feasibility of different pumps, including where they could be bought • Bill of materials: – Validated that all items needed are in BOM – Found links to where items could be bought, and that they were both cheap and within specifications • Estimated final cost, especially when finding areas where the final cost may increase or decrease. • Drew most diagrams for presentation and report. • Created Easter timeline: – Marked down critical tasks and steps for mitigation – Scheduled tasks so there would be as little 'downtime' as possible for different team members, and there would be rigorous amounts of testing, especially in the first three days to ensure we're on track
Lucy	• Conducted feasibility study of gravity and syringe pump mechanisms, including initial calculations for pressures and fluid circuit diagrams. • Developed dual syringe pump concept and operating logic to achieve continuous flow without pressure drops. • Research into methods of waveform generation through motor (and syringe) speed variation. • Researched and evaluated different valve configurations to remove backflow (including: check, 3/2 and pinch valves). • Researched different 3D printer materials for use in syringe housing.
Luca	• Created a blood flow simulation app using ChatGPT to understand the flow rates required in different vessels and how age, sex and cardiac health influences pulse profile. • Critically evaluated current laboratory setup to determine main problem areas of current setup and produce a requirements list for our pump. • Analysed current pumps on the market against our required criteria to choose the optimal design. • Created initial designs for the dual-syringe pump setup and pressure modulation system. • Conducted in-depth calculations to determine specifications for pump components: – Motor torque and speed calculations + gearing requirements – Syringe sizing and forces on plunger required to achieve dialysis flow rates + refill periods – Generation of systolic peak by compressing the tube or altering the syringe flow rate • Researched appropriate pressure sensors including type (gauge) and operating range (up to 40 kPa). • Researched how pinch valves and voice coil actuators can be used to generate pressure pulses in the flow.
Tahmid	• Preliminary modelling of a peristaltic pump using Claude to view the pressure profile. • Research on the variation of the cardiac pressure profile with age, sex, exercise. • Research on the modelling of the cardiac pressure profile (Windkessel, Womersley, Fourier analysis based methods). • Calculations and modelling of the syringe force. • Research on clinical motivations and graft applications (haemodialysis, bypass surgery). • Research on software options (cross-platform options, input/output using pandas, data analysis in scipy, signal processing, UI solutions in Qt, Python, React, web servers). • Planned the structure and formatting goals for the presentation and short report. • Typesetting the presentation and short report in LaTeX.

Table 5: Individual contributions

10.2 Easter Term

time period	planned activities
Week 3, first half (May 14–18)	Initial familiarisation with equipment and software. Control/Software will define valve configurations and test setups. Mechanical will build a basic prototype. Electrical will prepare components for data acquisition. Initial DC pressure data will be collected, followed by simple waveforms (e.g. sine and triangle).
Week 3, second half (May 19–20)	Optimal setup selected based on cost and controllability. Control team will develop a simple closed-loop feedback model for microcontroller implementation. Initial functional tests (DC, waveform generation, RPM control). Mechanical will begin casing prototype. Software will begin UI development in collaboration with Electrical.
Week 4, first half (May 21–24)	Continued testing to achieve physiologically realistic waveforms. Parameter control (RPM, waveform shape) finalised. Software and electrical systems integrated. Casing tested for accessibility and modularity. Interim reports submitted.
Week 4, second half (May 25–27)	Design refinement and final casing assembly. Poster and presentation drafting begins.
Week 5 (May 28–June 5)	Poster and presentation completed and delivered.

Table 6: Project plan and timescales

11 Critical steps

Several tasks are critical to the success of the project. These are described below, as well as the steps we will take to mitigate any potential issues.

11.1 Accuracy and consistency of readings

Sensors and motors must be able to be observed and controlled accurately. We are using stepper motors, which do not have a high level of control like servos. Closed-feedback loops will likely be used to solve this issue. If sensors are not accurate, more expensive devices may need to be used, which will drive up the cost of the final product. Fallback designs are also able to be used if the syringe pumps fail, such as a gravity pump or diaphragm pump. These designs would use the same materials as ordered for the syringe pump, so there wouldn't be a waiting time to get equipment to test them.

11.2 Implementing the control system

Even if each individual module works in a vacuum, they may not work when put together. This is why several configurations will be tested at the start of the project, though they won't be tested with a control system. More expensive servos may need to be used if a closed-feedback loop can't be accurately created.

11.3 Connecting software to hardware

The microcontroller should be able to be controlled by a GUI or CLI for ease of use and testing. The product won't be useable without this connection. To mitigate this risk, the simplest version of connection between software and hardware will be tested early, so that very basic commands 'start at 100 RPM' and 'stop' will be available, even if there may not be an automated system to tell the pump to stop.

11.4 Fallback design

Given the resources acquired for the dual-syringe pump method, as a fall-back option to still hit the requirements, a simple gravity-pump system could be set up instead. Hydrostatic pressure: P= rho*g*h with pressure required in the range of 80-120 mmHg, leads to 10.7-16 kPa. So height required to elevate saline source to is h = P/(9810) = 1.09 - 1.63m, above the test grafts, which is just feasible in the laboratory setting. The voice coil actuators could still be added downstream of the grafts to add the non-standard waveform to the pressure profile, with feedback still implemented through pressure sensor measurement and altering actuator frequency. A specialised upper reservoir could be designed to allow a constant level of fluid (to maintain constant pressure) with an overflow outlet above the desired height of fluid, and a steady tap

inlet of fluid into the reservoir. However at 300ml/min running for 90 minutes = 27L of fluid required, which would be feasible for water but not saline. The gravity pump could also provide a good option for testing the efficacy of the voice coil actuators as pinch valves, isolated from the effects of the syringe pressures.

12 Safety considerations

This project handles water and electrical components near eachother. Care should be taken to avoid any damage to the electronics, or damage to the person.

13 Use of AI

Use of AI involves:

- the initial cost estimate and finding certain items online, like valves; however all final prices listed are taken from website links (Lonnie);
- planning report and presentation structure against a task brief; proofreading report/presentation content against the brief to find gaps (Tahmid);
- To quickly build python scripts implementing stated physiological models (Tahmid);
- To help format and discover LaTeX features and typesetting rules (Tahmid);
- To learn quickly about possible mechanical components that could be implemented (e.g 3/2 valves or voice coil actuators) (Lucy);
- To generate quick and simple calculations for feasibility studies into pump designs (e.g height required for various pressures in the gravity pump), checked with hand calculations (Lucy);
- To reword paragraphs but not generate content (Luca);
- To assist with calculations, which was verified using hand-calculations (Luca);
- To see quickly what waveforms could be generated (India);
- To get background information and context about perfusion pumps, mechanical components, pressure sensors (India);

A Appendix

A.1 Estimating force at the syringe plunger

The force required to operate a syringe pump was estimated assuming laminar flow through a tube of length L and radius R_t. Using the Poiseuille equation, the volumetric flow rate Q generates a pressure drop ΔP, giving a plunger force:

$$F = \Delta P \cdot A_s = \frac{8\eta L Q R_s^2}{R_t^4}$$

where R_s is the syringe radius and η the fluid viscosity. For typical parameters: $L = 2\,\text{m}$, $R_t = 2\,\text{mm}$, $R_s = 1.3\,\text{cm}$, $Q = 300\,\text{mL}\,\text{min}^{-1}$, $\eta = 1 \times 10^{-3}\,\text{Pa}\,\text{s}$, the resulting plunger force is $F = 0.845\,\text{N}$. This corresponds to a pressure drop of $\Delta P = 5000\,\text{Pa} = 37.5\,\text{mmHg}$.

A.2 Pulse rate of existing peristaltic pump

The existing peristaltic pump produces 3 pulses per revolution, giving BPM = 3 × RPM, where RPM = $\dot{V}/V_{\text{rev}}$. The volume displaced per revolution is:

$$\begin{aligned} V_{\text{rev}} &= \pi D \cdot \pi r^2 = \pi \times 37\,\text{mm} \times \pi \times (2.4\,\text{mm})^2 \\ &= 2094\,\text{mm}^3 \end{aligned}$$

where $D = 37\,\text{mm}$ is the pump head diameter (product brochure [4]) and $r = 2.4\,\text{mm}$ assuming standard 4.8 mm silicone tubing. At a flow rate of $400\,\text{mL}\,\text{min}^{-1}$:

$$\text{BPM} = 3 \times \frac{400\,\text{mL}\,\text{min}^{-1}}{2.094\,\text{mL}} \approx 573 \text{ beats per minute} \tag{1}$$

This far exceeds the physiological range of 60 beats/min to (numerical range) 100 beats/min, confirming the existing pump is unsuitable for replicating a physiological pulse waveform.

A.3 Lead screw speed

The lead screw speed in RPM is derived from the required flow rate Q, syringe cross-sectional area A, and lead screw pitch L:

$$\text{RPM} = \frac{60Q}{AL} \tag{2}$$

A.4 Lead screw torque

The torque required to drive the lead screw is:

$$T = \frac{FL}{2\pi\nu} \tag{3}$$

where F is the plunger force, L is the lead screw pitch, and $\nu = 0.3$ is the assumed lead screw efficiency.

A.5 Syringe plunger displacement for pressure change

The plunger displacement required to produce a pressure change ΔP over time Δt is:

$$\Delta x = \frac{\Delta P}{RA} \cdot \Delta t \tag{4}$$

where $R = 8\mu l/\pi r^4$ is the fluidic resistance from Poiseuille's law, A is the syringe cross-sectional area, μ is the dynamic viscosity of blood, and l and r are the tubing length and radius.

A.6 Tube radius change for pressure modulation

The change in tube radius required to produce a pressure change ΔP via the pinch valve is derived from Poiseuille's law:

$$\Delta r = \sqrt[4]{\frac{8Q\mu l}{\pi \Delta P}} \tag{5}$$

References

[1] Jacob A. Akoh. ?Prosthetic Arteriovenous Grafts for Hemodialysis? in*The Journal of Vascular Access*: 10.3 (1 july 2009), pages 137–147. ISSN: 1129-7298. DOI: 10.1177/112972980901000301. URL: https://doi.org/10.1177/112972980901000301 (urlseen 18/03/2026).

[2] *Anti (Non) Backlash Spur Gear Techniques: Gear Backlash Prevention Method, Scissor Gear*. URL: https://www.brighthubengineering.com/machine-design/65169-how-does-an-anti-backlash-gear-works/ (urlseen 20/03/2026).

[3] Michael J. Joyner, B. Gunnar Wallin and Nisha Charkoudian. ?Sex Differences and Blood Pressure Regulation in Humans? in*Experimental Physiology*: 101.3 (2016), pages 349–355. ISSN: 1469-445X. DOI: 10.1113/EP085146. URL: https://onlinelibrary.wiley.com/doi/abs/10.1113/EP085146 (urlseen 18/03/2026).

[4] *Kamoer KK1800 Peristaltic Pump Head Instruction Manual*. manuals.plus. URL: https://manuals.plus/ae/1005007435106909 (urlseen 20/03/2026).

[5] Jiunn-Diann Lin andothers. ?Identification of Normal Blood Pressure in Different Age Group? in*Medicine*: 95.14 (april 2016), e3188. DOI: 10.1097/MD.0000000000003188. URL: https://journals.lww.com/md-journal/fulltext/2016/04050/identification_of_normal_blood_pressure_in.22.aspx (urlseen 18/03/2026).

[6] Catherine Loudon and Antoinette Tordesillas. ?The Use of the Dimensionless Womersley Number to Characterize the Unsteady Nature of Internal Flow? in*Journal of Theoretical Biology*: 191.1 (7 march 1998), pages 63–78. ISSN: 0022-5193. DOI: 10.1006/jtbi.1997.0564. URL: https://www.sciencedirect.com/science/article/pii/S0022519397905646 (urlseen 18/03/2026).

[7] Damian McGrogan andothers. ?Arteriovenous Fistula Outcomes in the Elderly? in*Journal of Vascular Surgery*: 62.6 (1 december 2015), pages 1652–1657. ISSN: 0741-5214. DOI: 10.1016/j.jvs.2015.07.067. URL: https://www.sciencedirect.com/science/article/pii/S0741521415016274 (urlseen 18/03/2026).

[8] *PETG HF*. Bambu Lab UK Store. URL: https://uk.store.bambulab.com/products/petg-hf (urlseen 20/03/2026).

[9] *Pneumatic Solenoid Valve — 3 2 & 2 Way Valve — RS*. URL: https://uk.rs-online.com/web/c/pneumatics-hydraulics/pneumatic-valves/pneumatic-solenoid-valves/ (urlseen 20/03/2026).

[10] J. E. Sharman and A. LaGerche. ?Exercise Blood Pressure: Clinical Relevance and Correct Measurement? in*Journal of Human Hypertension*: 29.6 (june 2015), pages 351–358. ISSN: 1476-5527. DOI: 10.1038/jhh.2014.84. URL: https://www.nature.com/articles/jhh201484 (urlseen 18/03/2026).

[11] Jacques Smuts. ?PID controllers explained? in*Canadian Process Equipment & Control News*: 2 (2002).

[12] Nico Westerhof, Jan-Willem Lankhaar and Berend E. Westerhof. ?The Arterial Windkessel? in*Medical & Biological Engineering & Computing*: 47.2 (1 february 2009), pages 131–141. ISSN: 1741-0444. DOI: 10.1007/s11517-008-0359-2. URL: https://doi.org/10.1007/s11517-008-0359-2 (urlseen 18/03/2026).