Low-cost perfusion pump

Multidisciplinary design (GM1)

L. Buxton L. McKiernan I. Henry L. Payne T. Azam

University of Cambridge

18 March 2026

Motivation

Collagen-based artificial vessels have applications in two key surgical contexts.

Haemodialysis

- Blood is removed, processed in a dialyser, then replaced
- Requires reliable vascular access at high flow rates
- Natural fistulas are difficult to achieve in elderly patients

Bypass surgery

- New routes are created for blood flow
- Artificial grafts offer standardisation and greater availability

Existing laboratory bench

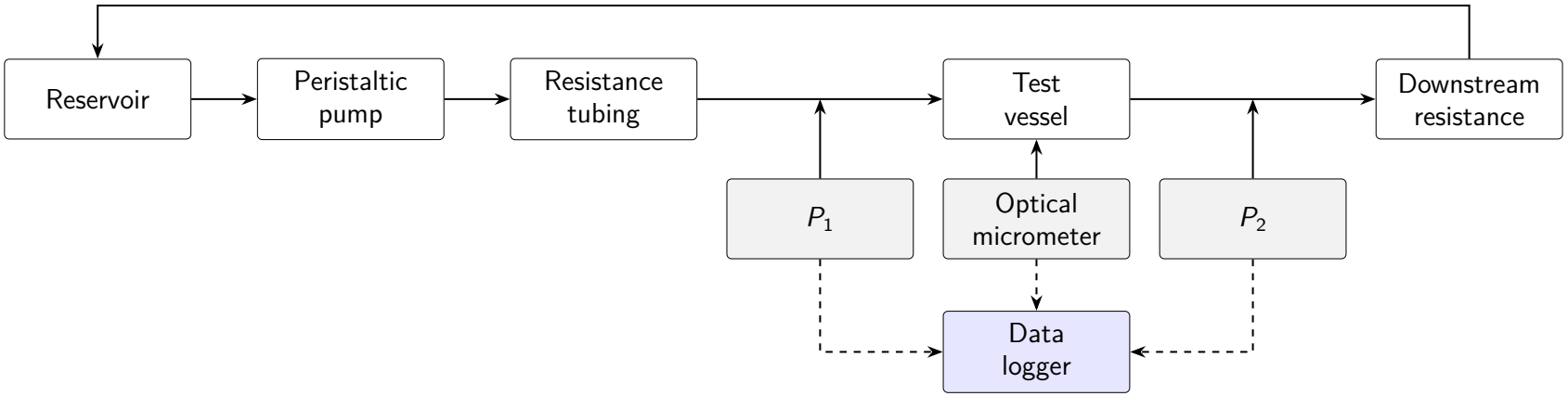

Limitations

- Excess tubing creates a cluttered workspace
- Achieving 300 mL min^{-1} requires more than 250 rpm $\gg$ resting cardiac frequency range, 60–120 bpm

Design brief

Requirements

- Continuous flow for 90 min
- Mean perfusion pressure 80–120 mmHg
- Compatible with 6 mm OD tubing
- Closed-loop control via pressure sensing
- Non-destructive to RBCs and endothelial layer

Desiderata

- Physiologically realistic pulsatile pressure profile
- Multiple pumps in parallel
- Selectable pre-programmed flow profiles
- Burst pressure ramp protocol
- Peak flow rate $300\,\mathrm{mL\,min^{-1}}$

Initial design: syringe pump

- 2 syringes for continuous flow
- Valves prevent backflow
- Pinch valves/motor variation to create non-standard waveform
- Pressure sensors for a feedback loop

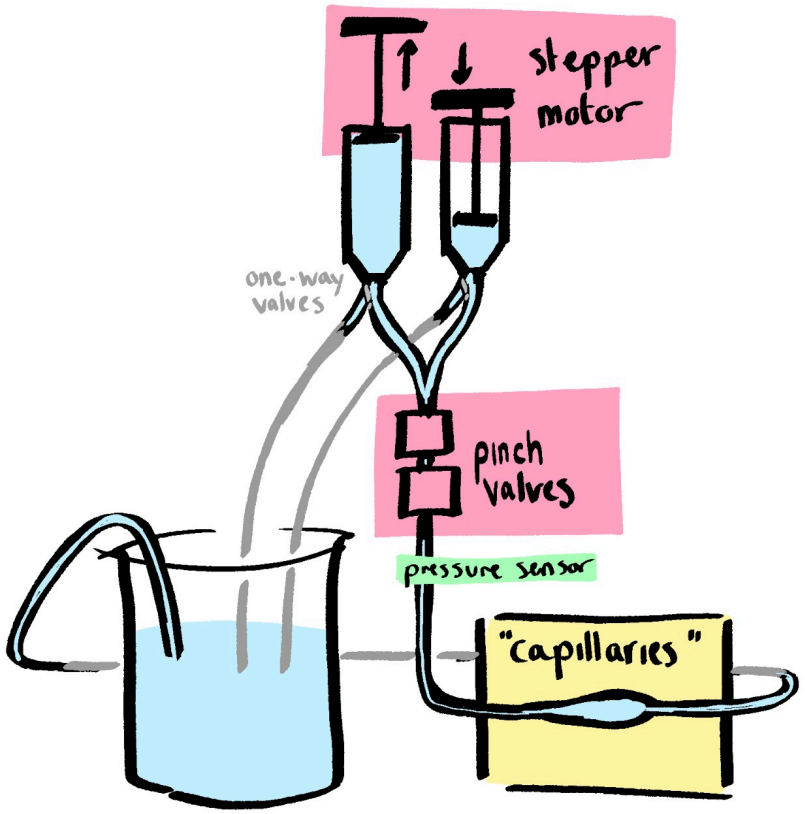

Project resources

item	**qty.**	**unit cost (£)**
microcontroller	1	20
power board	1	20
lead screw & stepper motor	2	15
pressure sensors	2	10
one-way valves	4	2
3/2 valves	2	10
pinch valves	2	20
syringes	2+	1
tubing	—	10
simple alphanumeric display	1	10
T-type connectors	—	1
Departmental		
3D printer	—	—
housing material	—	—
total		**∼150**

Final product cost

item	**qty.**	**unit cost (£)**
microcontroller	1	5–20
power board	1	10–20
lead screw & stepper motor	2	15
pressure sensors	2	3–10
valves	2–6	2
syringes	2	1
tubing	—	—
total		**50–100**
commerical syringe pumps		250–3000

Timeline

Mechanical	Electrical	Software	Control
prototype housing	prelim microcontroller		prelim model
pressure sensor construction			compare feedback methods
valving	sensor testing	prelim UI	
			*improve, verify model, break down into modules
*test for consistent readings			
Preliminary stage			
*final housing	test model modules	improve UI, parameters	model device limits
improve speed and accuracy if needed	*combine modules	UI documentation	
Modular stage			
test device, longevity	test device	test model accuracy	
Final stage			

Mechanical

- Design housing for motors, syringes, and reservoir
- Design and assemble connections for pressure sensors
- Design and assemble valve junctions valve junctions
- Data collection for control system parameter tuning
- Ensure final product is easy to 3D print and assemble, and that multiple pumps can be made and run at once

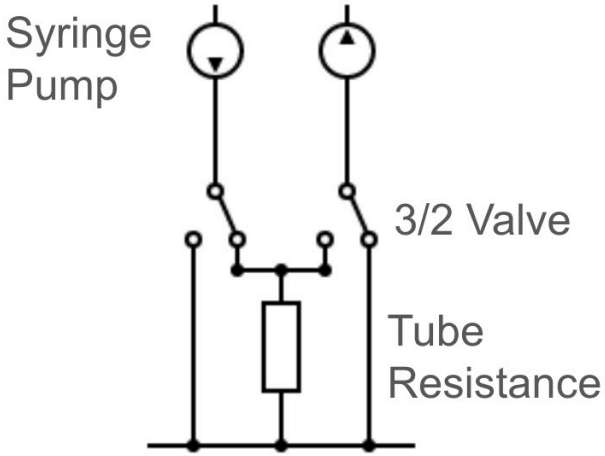

Mechanical: pressure sensing function

- Pressure is the primary output variable, the physiological signal being replicated
- Closed-loop control drives the pump to track a target pressure waveform
- Mean perfusion pressure must be maintained in a range, e.g. 80–120 mmHg at rest
- The heart beats at $\sim$1 Hz, but fast transients in the waveform must be faithfully tracked

Mechanical: pressure sensing specifications

parameter	value	rationale
Operating range	80–120 mmHg	Physiological perfusion target at rest
Full range	150–500 mmHg	Burst testing and safety margins
Sensor type	Gauge	Eliminates 760 mmHg atmospheric offset to avoid sacrificing sensor dynamic range
Minimum bandwidth	100 Hz	Nyquist for estimated 50 Hz control loop sampling rate

Mechanical: valves

- 2 one-way valves at syringe exit with the same cracking pressure mechanism as in the heart
- Optional 3/2 valve setup for more control

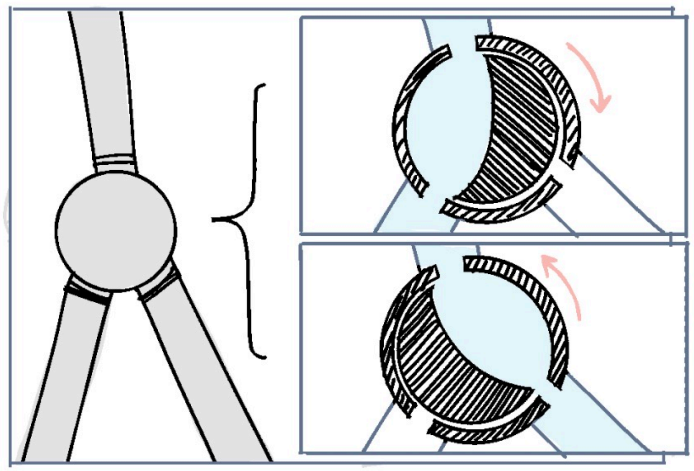

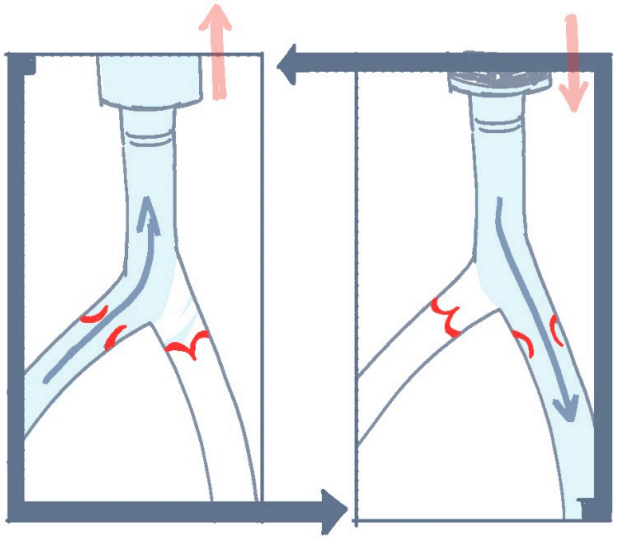

Mechanical: motors

Stepper motor

- Precise position control
- Fast, inexpensive speed changes
- 200 steps/rev, 0.1 N m hold torque

Key calculations

$$n = \frac{60Q}{AL} \approx 37.5\,\text{rpm} \qquad T = \frac{FL}{2\pi\eta} \approx 6.8\,\text{mN m}$$

N.B. n: motor speed; Q: flow rate; A: syringe area; $L = 8\,\text{mm}$: lead screw pitch; T: torque; F: axial force; η: efficiency

Mechanical: waveform

Simpler

- Stepper motor modulates syringe push rate directly
- Only 1 pressure sensor required

More control

- Pinch valves added downstream of syringes
- AC pressure component superimposed on DC syringe output
- 2 pressure sensors required

Electrical

Preliminary

- Familiarise with microcontroller
- Connect and test sensors
- Compare sensor data with control team

Modular

- Convert model to microcontroller
- Combine modules into larger subsystems
- Support mechanical team with soldering/other electronic tasks

Final

- Fix errors using model with control team
- Extensive testing
- Select cheapest viable microcontroller given features used

Software

- Well-documented GUI and CLI (scripting)
- Real-time visualisations and plots
- Cross-platform
- Rich data logging with convenient export formats

Software: profile configuration

- Customise the target pressure profile via:
  - Physiological parameters (heart rate, systolic/diastolic pressures)
  - Demographics (age, sex)
  - Activity level (rest vs. exercise)
  - Vessel type (artery, capillary, vein)
- Set operation schedules
  - e.g. ramp pressure to test vessel integrity over time

Software: monitoring & exporting

- Live pressure trace at the test start point
  - Cumulative error (especially during syringe transition)
  - System uptime
- Automatic flagging of extreme pressure values
  - Sudden drop $\rightarrow$ vessel rupture
  - Sudden rise $\rightarrow$ blockage or clotting
- Export data traces as CSV

Software: modelling the pressure profile

- Windkessel model to find the mean pressure for a specific vessel
- The Womersley number can be used characterise the vessel (inertia dominated, as in large arteries, or viscosity dominated as in capillaries)
- Carry out Fourier analysis on parameter-sensitive cardiac waveforms found in literature [1]

$$P(t) = P_{\text{mean}} + \sum_{n=1}^{N} A_n \sin(n\omega t + \phi_n)$$

Set ω from heart rate, P_{mean} from the Windkessel model and fit $\{A_n\}$ and $\{\phi_n\}$ from literature

Control: objectives

Goal

Track and approach a target pressure profile in real time.

Constraints

- Must not exceed maximum safe pressure — vessel bursting is irreversible
- Must account for system non-linearities: syringe mechanics, valve dynamics

Control: solution

Linear systems negative feedback loop

- Filter raw pressure sensor output
- PID controller maps pressure error $\rightarrow$ motor speed
- High sampling frequency ($\sim$50 Hz) minimises non-linearity effects by keeping each control step within a near-linear operating region
- Control both the DC mean pressure component and the AC pulsatile waveform

Key challenge: modelling the plant

Specifically the relationship between motor speed and output pressure.

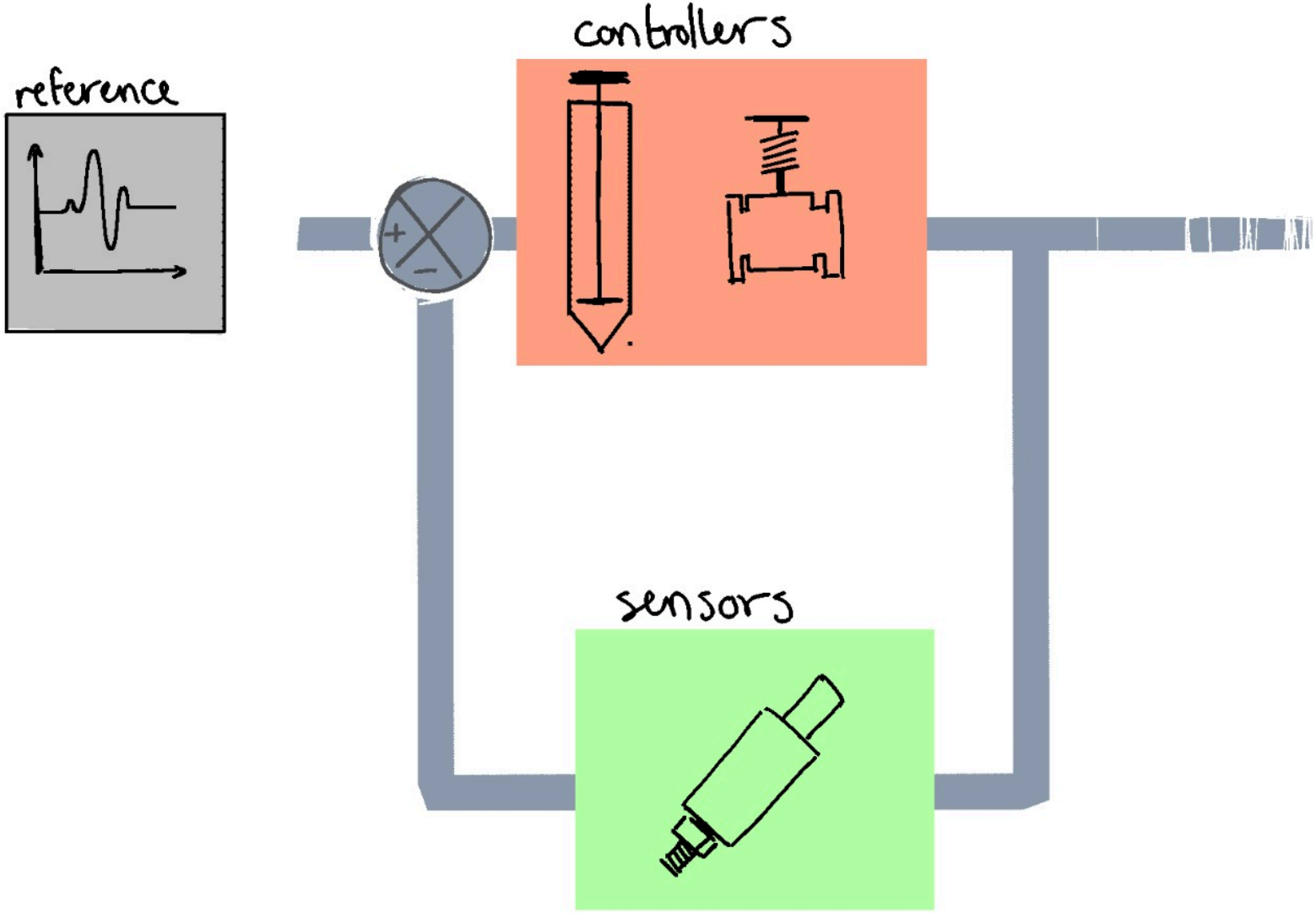
controllers
reference
+
−
sensors

Control: extensions

Compliance modelling

Burst pressure modelling

- Combine deformation gradients with pressure data to predict failure point
- Enables safe, more controlled burst pressure testing

Next steps: initial prototype + testing

Mechanical

- Build syringe → valves → reservoir → syringe fluid circuit
- Build motor/syringe housing
- Connect pressure sensors to tubing

Electrical

- Learn microcontroller software

Control

- Build and test control system on simulated pressure waveforms
- Characterise controller lag and amplitude response in real time

Software

- Choose a tech stack
- Begin basic modelling features and plan UIs

Fallback: if syringe system doesn't work as planned

Gravity-powered flow

Diaphragm for pressure pulses

References

[1] George S. Malindzak. "Fourier Analysis of Cardiovascular Events". In: *Mathematical Biosciences* 7.3 (Apr. 1, 1970), pp. 273–289. ISSN: 0025-5564. DOI: 10.1016/0025-5564(70)90128-8. URL: https://www.sciencedirect.com/science/article/pii/0025556470901288 (visited on 03/16/2026).

Questions?

Presentation source can be found at www.github.com/tahmidazam/gm1-pump.