Short Team Report

Team 2: Low Cost Perfusion Pump

Part IIA: GM1 *Multidisciplinary Design*

Tahmid Azam[1], Luca Buxton[1], India Henry[1], Lonnie McKiernan[1], and Lucy Payne[1]

[1]Department of Engineering, University of Cambridge

20 March 2026

Abstract

The bioengineering department are investigating the applications of collagen-based synthetic blood vessels for haemodialysis, involving the measurement of vessel compliance under different pressure profiles.

1 Clinical motivation

Haemodialysis is the process of removing blood from the body, passing it through a dialyser which filters it, and then returning it to the body, and is indicated in cases of kidney failure. The department is looking to penetrate the artifical vessel graft market by targeting an application that doesn't pose immediate threat to life upon failure (in contrast to grafts for bypass surgery, e.g. coronary bypass), involves use on much shorter timescales, and features simpler medical device regulation. In order to support the high flow rates required for haemodialysis ($> 300\,\mathrm{mL\,min^{-1}}$), arteriovenous (AV) fistulas are commonly surgically formed. In the elderly population, the formation of AV fistulas can be more challenging due to vessel damage from natural and iatrogenic causes (e.g., repeated blood samples over many years), as well as slow time to maturation[5]. Synthetic vessel grafts help form a AV fistula with a shorter maturation period, or for patients with exhausted vascular access sites[1]. In the case of artificial vessels for uses in bypass grafts, they offer greater availability over the current sources of donor vessels from the great veins of the leg, which may be damaged and require modification in order for arterial applications.

1.1 Electrical Subsystem

The electrical system will be connected as follows:

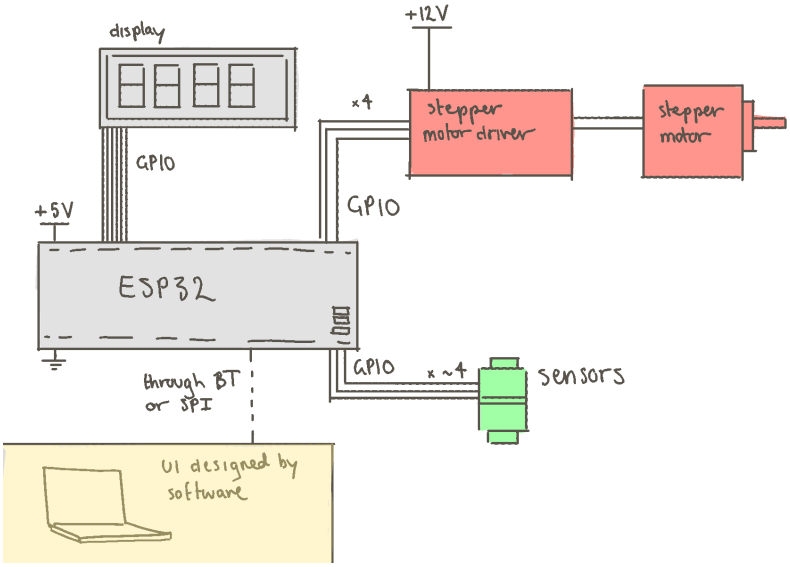

An ESP32 will be used, this will be cheaper and easier to scale compared to an arduino or RP. The display will be an alphanumeric display, anticipating that connecting the laptop may be more complicated than needed at the start. There will be a maximum of 4 stepper motor drivers. 2 will be used to push the syringes, and the other 2 will be used to open and close valves. These will be connected with general purpose I/O pins. Sensors will also be connected with GPIO. The computer will be connected through bluetooth, SPI, or other protocols like I2C, dependent on which is easiest. SPI will be attempted first.

Power will be from the computer (5V) for the microcontroller, and from the wall with an adapter for the 12V needed for the motor driver.

1.2 Timeline:

Week 1:

- hours 1-3: Create simple program, like turning on a light when a button is pressed to ensure microcontroller and software for mc - set up properly
- hours 3-5: connect stepper motor driver and motor, without syringe. Create simple code to test. Add syringe, and get power and pressure measurements.
- hours 5-6: connect display, ensure its working.
- hours 6-7: connect display to motor power.
- hours 7-10: connect and test sensors with water.
- hours 10-15: test multiple setups for pump, using different valves and placements of valves.

after this, the work needed to be done is less known. The best setup will be taken, and modelled in Python/MATLAB before being converted into hardware. Errors with sensing and motor control will be fixed.

2 Software

Through the software, laboratory personnel will be able to choose a pressure profile configuration and schedule of operation, view real-time pressure plots including the error for monitoring, and be able to log/export pressure data. For the lab environment, this would involve both a graphical user interface (GUI) for real-time visualisations and user-friendly changing of preferences and a command-line interface (CLI) for more advanced scripting for reproducible experiments and sharing of configurations, essential for peer-reviewed research. The software should be cross-platform, and support standard file formats for data export (e.g., comma-separated values, CSV). The software should be able to program schedules, such as a ramping

mode of operation that slowly increases the pressure to find the bursting point. The software should also flag warnings for error states, such as sudden drops in pressure from a leak (e.g. vessel bursting) or sudden increases in pressure from a blockage (e.g., blockage from a clotting process). Cumulative error, percentage uptime at target pressure should also be monitored for evaluation. Storage demands involve 2.34 kB s^{-1} (3 64 bit floats at 100 Hz), with data transmitted over USB.

2.1 Modelling the pressure profile

There is huge variation in the pressure profile, and the software plans to offer multiple perspectives by which to model the cardiovascular system. Basic controls involve setting target systolic pressures, diastolic pressures, and heart rate. In addition, we can offer easier set up of experiment sets by incorporating normative data that adjusts these physiological variables for age[3], sex[2], level of exercise[6], temperature, and the type of vessel (i.e., distance from the heart, such as artery, capillary, or venule). The chosen configuration and parameters can be exported, stored, or shared as JavaScript Object Notation (JSON) files for repeatability. The mathematical modelling of pressure profiles consists of splitting the target signal into two components: a constant mean DC pressure component, and an AC component. The DC component we model using the Windkessel model[7] and literature values for the Womersley number for different vessel types, sensitive to the aging process[4]. The AC component we emulate by conducting Fourier analysis on literature representations of the cardiac cycle, to capture nuances such as the dicrotic notch.

3 Project Resources and Costing

3.1 Prototype Bill of Materials

item	**link**	**cost**	**amount**	**notes**
Microcontroller: ESP32 with bluetooth	microcontroller link	16.58	1	
Stepper motors	stepper motor link	9.67	4	
Stepper motor driver: preferably TMC2209	TMC2209 link	17.99	1 (6 bought together)	
Alphanumeric display	alphanumeric display	3.70	2	
Pinch valve	pinch valve link	9.99	1 (5 bought together)	6mm tubing
3/2 valve	3/2 ball valve	7.99	1 (3 bought together)	6mm tubing
One-way valve	one-way valve	7.04	4	6mm tubing
Syringes - as many sizes between 60ml and 100ml as possible	syringe link and alternative	25.99	5 (cheaper as set of 5)	
Syringe for initial testing	syringe for testing	5.59	2	
Tubing: 4-5 mm inner, 1 mm thickness	silicone tubing	15.75	5 meters (minimum order)	1mm thickness, 5mm diameter

Total: £179.71

The breakout board with the microcontroller will already include an LED and switches, as well as being pre-soldered, for quick testing. It will also have bluetooth and different peripherals, like I2C protocols available.

3.2 Final Product Cost Estimate

The final product cost is hard to determine as different configurations may be used. The current estimate is between 50 - 100 pounds, broken down in the table below.

item	**qty.**	**unit cost ($)**
microcontroller	1	5–20
motor controller board	1	10–20
lead screw & stepper motor	2	15
pressure sensors	2	3–10
valves	2–6	2
syringes	2	1
tubing	—	—
total		**50–100**

3.3 Resource Requests

Within the department, we require:

- 3D printing materials
- Tubing, if available
- Pressure sensors (as discussed with Dr. Peter Long), including T-type connectors
- Lead screw materials
- Breadboard, including pins
- Soldering equipment and material
- Perfboard (later in timeline)

4 Plan and Timescales

4.0.1 Week 3, first half (May 14 - 18):

Initial familiarisation with different equipment/software. Control/Software will put together a list of setups with valves and placements of valves to test their efficacy. Mechanical will build basic prototype. Electrical will set up components so data can be tested. Data for DC pressure will be first taken, then easy waveforms will be tested, like a sine wave or triangle wave.

4.0.2 Week 3, second half (May 19 - 20):

Best setup, including factors like price and ease of control, will be determined. Control team will create simple model of closed-loop feedback needed, which can be converted to microcontroller hardware. Initial tests will be done, like creating DC and other waveforms, and ability to vary RPM. Mechanical will begin creating casing prototype.

Software will begin building UI, in collaboration with Electrical.

4.0.3 Week 4, first half (May 21 - 24):

Testing will continue, until waveform resembles heartbeat. Ability to vary parameters like RPM and waveform will be completed and be controllable. Software system and electrical system will be linked. Casing will be tested to see if all items are easily removable.

Interim reports will be submitted.

4.0.4 Week 4, second half (May 25-27):

Design will be refined, and final casing will be tested and put together. Poster and presentation will start being drafted.

4.0.5 Week 5 (May 28 - June 5):

Poster and presentation will be finished and presented.

4.1 Lent Term Summary

4.2 Easter Term Plan

4.3 Milestones and Deliverables

5 Critical Steps and Mitigating Problems

Several tasks are critical to the success of the project. These are described below, as well as the steps we will take to mitigate any potential issues.

5.0.1 Accuracy/consistency of readings

Sensors and motors must be able to be observed and controlled accurately. We are using stepper motors, which do not have a high level of control like servos. Closed-feedback loops will likely be used to solve this issue. If sensors are not accurate, more expensive devices may need to be used, which will drive up the cost of the final product.

Fallback designs are also able to be used if the syringe pumps fail, such as a gravity pump or diaphragm pump. These designs would use the same materials as ordered for the syringe pump, so there wouldn't be a waiting time to get equipment to test them.

5.0.2 Implementing the control system

Even if each individual module works in a vacuum, they may not work when put together. This is why several configurations will be tested at the start of the project, though they won't be tested with a control system. More expensive servos may need to be used if a closed-feedback loop can't be accurately created.

5.0.3 Connecting software to hardware

The microcontroller should be able to be controlled by a GUI or CLI for ease of use and testing. The product won't be useable without this connection. To mitigate this risk, the simplest version of connection between software and hardware will be tested early, so that very basic commands 'start at 100 RPM' and 'stop' will be available, even if there may not be an automated system to tell the pump to stop.

6 Technical Risks

This project handles water and electrical components near eachother. Care should be taken to avoid any damage to the electronics, or damage to the person.

7 Use of AI

Lonnie: AI was used for the initial cost estimate and finding certain items online, like valves. All final prices listed are taken from website links.

References

[1] Jacob A. Akoh. ?Prosthetic Arteriovenous Grafts for Hemodialysis? in*The Journal of Vascular Access*: 10.3 (1 july 2009), pages 137–147. ISSN: 1129-7298. DOI: 10.1177/112972980901000301. URL: https://doi.org/10.1177/112972980901000301 (urlseen 18/03/2026).

[2] Michael J. Joyner, B. Gunnar Wallin and Nisha Charkoudian. ?Sex Differences and Blood Pressure Regulation in Humans? in*Experimental Physiology*: 101.3 (2016), pages 349–355. ISSN: 1469-445X. DOI: 10.1113/EP085146. URL: https://onlinelibrary.wiley.com/doi/abs/10.1113/EP085146 (urlseen 18/03/2026).

[3] Jiunn-Diann Lin andothers. ?Identification of Normal Blood Pressure in Different Age Group? in*Medicine*: 95.14 (april 2016), e3188. DOI: 10.1097/MD.0000000000003188. URL: https://journals.lww.com/md-journal/fulltext/2016/04050/identification_of_normal_blood_pressure_in.22.aspx (urlseen 18/03/2026).

[4] Catherine Loudon and Antoinette Tordesillas. ?The Use of the Dimensionless Womersley Number to Characterize the Unsteady Nature of Internal Flow? in*Journal of Theoretical Biology*: 191.1 (7 march 1998), pages 63–78. ISSN: 0022-5193. DOI: 10.1006/jtbi.1997.0564. URL: https://www.sciencedirect.com/science/article/pii/S0022519397905646 (urlseen 18/03/2026).

[5] Damian McGrogan andothers. ?Arteriovenous Fistula Outcomes in the Elderly? in*Journal of Vascular Surgery*: 62.6 (1 december 2015), pages 1652–1657. ISSN: 0741-5214. DOI: 10.1016/j.jvs.2015.07.067. URL: https://www.sciencedirect.com/science/article/pii/S0741521415016274 (urlseen 18/03/2026).

[6] J. E. Sharman and A. LaGerche. ?Exercise Blood Pressure: Clinical Relevance and Correct Measurement? in*Journal of Human Hypertension*: 29.6 (june 2015), pages 351–358. ISSN: 1476-5527. DOI: 10.1038/jhh.2014.84. URL: https://www.nature.com/articles/jhh201484 (urlseen 18/03/2026).

[7] Nico Westerhof, Jan-Willem Lankhaar and Berend E. Westerhof. ?The Arterial Windkessel? in*Medical & Biological Engineering & Computing*: 47.2 (1 february 2009), pages 131–141. ISSN: 1741-0444. DOI: 10.1007/s11517-008-0359-2. URL: https://doi.org/10.1007/s11517-008-0359-2 (urlseen 18/03/2026).

A Appendix

A.1 Estimating force at the syringe plunger

The force required to operate a syringe pump was estimated assuming laminar flow through a tube of length L and radius R_t. Using the Poiseuille equation, the volumetric flow rate Q generates a pressure drop ΔP, giving a plunger force:

$$F = \Delta P \cdot A_s = \frac{8\eta L Q R_s^2}{R_t^4}$$

where R_s is the syringe radius and η the fluid viscosity. For typical parameters: $L = 2\,\mathrm{m}$, $R_t = 2\,\mathrm{mm}$, $R_s = 1.3\,\mathrm{cm}$, $Q = 300\,\mathrm{mL\,min^{-1}}$, $\eta = 1 \times 10^{-3}\,\mathrm{Pa\,s}$, the resulting plunger force is $F = 0.845\,\mathrm{N}$. This corresponds to a pressure drop of $\Delta P = 5000\,\mathrm{Pa} = 37.5\,\mathrm{mmHg}$.