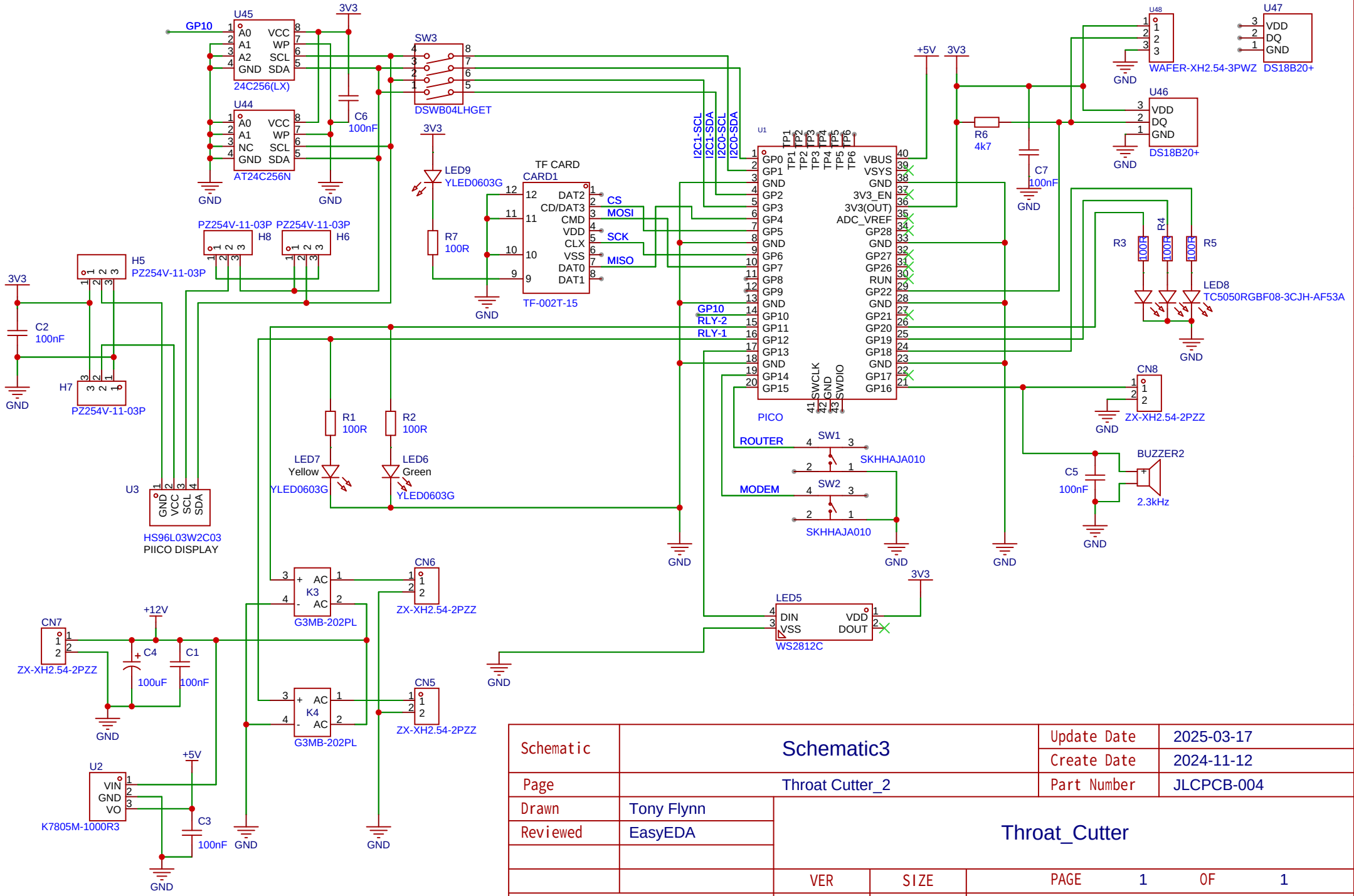

Schematic	Schematic3	Update Date	2025-03-17
		Create Date	2024-11-12
Page	Throat Cutter_2	Part Number	JLCPCB-004
Drawn	Tony Flynn	Throat_Cutter	
Reviewed	EasyEDA		
		VER	SIZE	PAGE 1 OF 1
EasyEDA		V1.1	A4	Tony