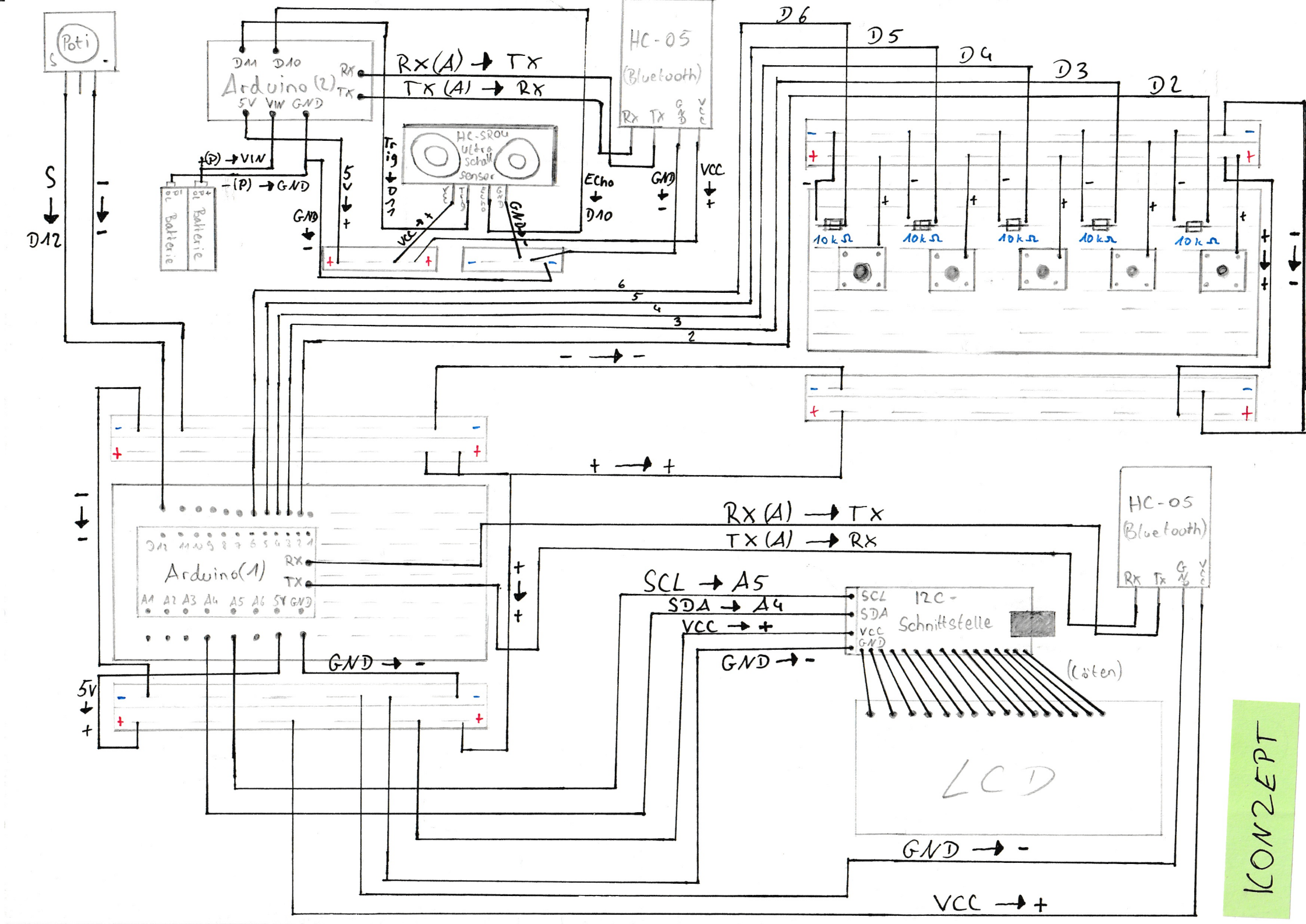
Poti
S
D12
Arduino (2)
D11 D10
RX
TX
5V VIN GND
RX (A) → TX
TX (A) → RX
HC-05
(Bluetooth)
RX TX GND VCC
HC-SR04
Ultra Schall Sensor
Trig → D11
Echo → D10
GND
VCC
+(P) → VIN
-(P) → GND
Batterie
Batterie
5V
GND
D6
D5
D4
D3
D2
10kΩ
10kΩ
10kΩ
10kΩ
10kΩ
6
5
4
3
2
- → -
+ → +
Arduino(1)
D12 11 10 9 8 7 6 5 4 3 2 1
RX
TX
A1 A2 A3 A4 A5 A6 5V GND
RX (A) → TX
TX (A) → RX
HC-05
(Bluetooth)
RX TX GND VCC
SCL → A5
SDA → A4
VCC → +
GND → -
I2C-Schnittstelle
SCL
SDA
VCC
GND
(Löten)
LCD
GND → -
VCC → +
5V
KONZEPT