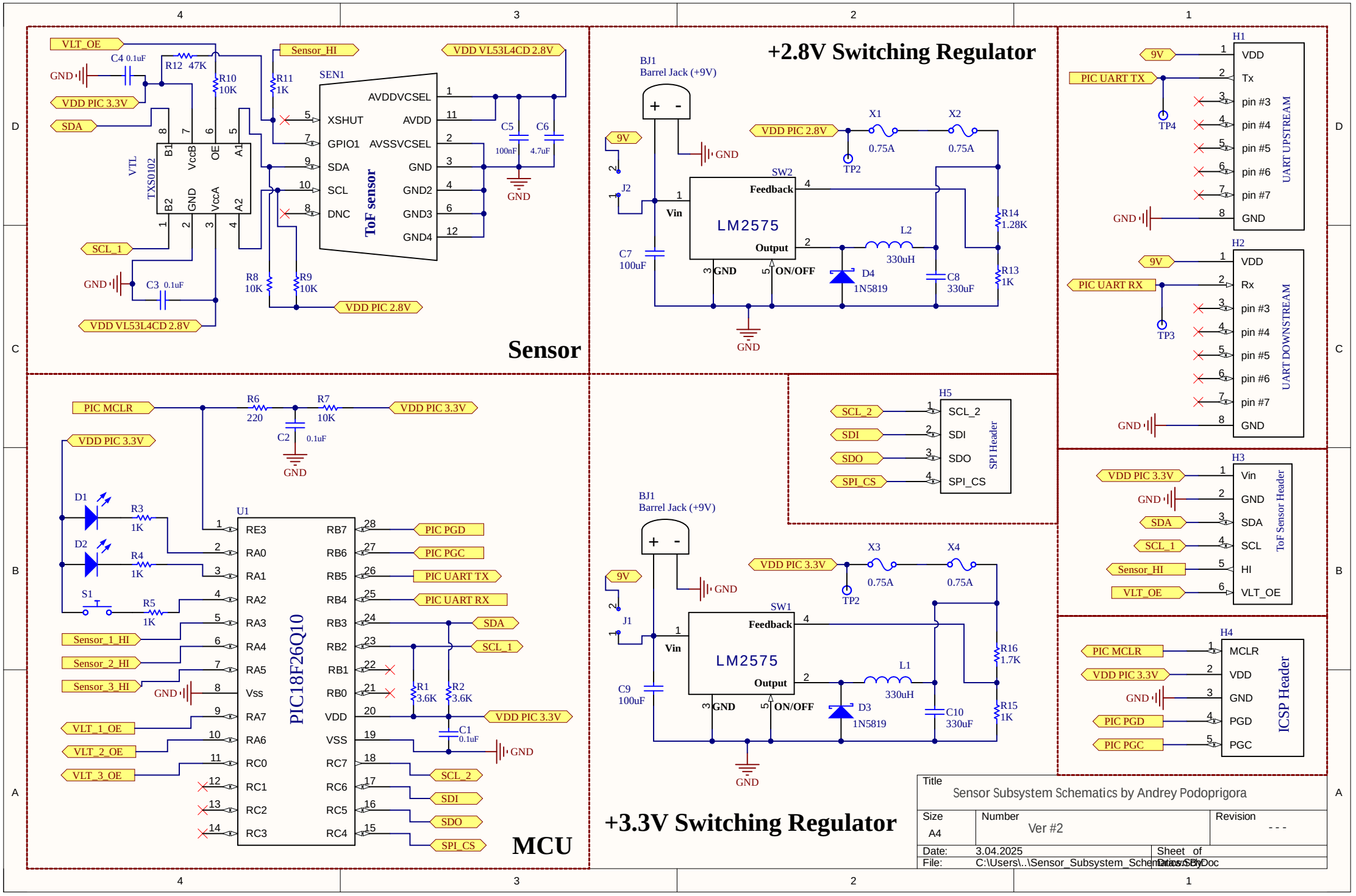
Sensor
VLT_OE
GND
C4 0.1uF
R12 47K
R10 10K
VDD PIC 3.3V
SDA
VTL TXS0102
B1 VccB OE A1
B2 GND VccA A2
SCL_1
C3 0.1uF
VDD VL53L4CD 2.8V
Sensor_HI
R11 1K
SEN1
XSHUT
GPIO1
SDA
SCL
DNC
AVDDVCSEL
AVDD
AVSSVCSEL
GND
GND2
GND3
GND4
ToF sensor
VDD VL53L4CD 2.8V
C5 100nF
C6 4.7uF
R8 10K
R9 10K
VDD PIC 2.8V
+2.8V Switching Regulator
BJ1 Barrel Jack (+9V)
9V
J2
Vin
C7 100uF
LM2575
Feedback
Output
GND
ON/OFF
VDD PIC 2.8V
X1 0.75A
X2 0.75A
TP2
SW2
L2 330uH
D4 1N5819
C8 330uF
R14 1.28K
R13 1K
H1
VDD
Tx
pin #3
pin #4
pin #5
pin #6
pin #7
GND
UART UPSTREAM
PIC UART TX
TP4
H2
Rx
UART DOWNSTREAM
PIC UART RX
TP3
H5
SCL_2
SDI
SDO
SPI_CS
SPI Header
H3
Vin
HI
VLT_OE
ToF Sensor Header
H4
MCLR
PGD
PGC
ICSP Header
MCU
PIC MCLR
R6 220
R7 10K
C2 0.1uF
D1
R3 1K
D2
R4 1K
S1
R5 1K
U1
PIC18F26Q10
RE3
RA0
RA1
RA2
RA3
RA4
RA5
Vss
RA7
RA6
RC0
RC1
RC2
RC3
RB7
RB6
RB5
RB4
RB3
RB2
RB1
RB0
VDD
VSS
RC7
RC6
RC5
RC4
Sensor_1_HI
Sensor_2_HI
Sensor_3_HI
VLT_1_OE
VLT_2_OE
VLT_3_OE
PIC PGD
PIC PGC
PIC UART TX
PIC UART RX
SDA
SCL_1
R1 3.6K
R2 3.6K
C1 0.1uF
SCL_2
SDI
SDO
SPI_CS
+3.3V Switching Regulator
BJ1 Barrel Jack (+9V)
J1
C9 100uF
SW1
L1 330uH
D3 1N5819
C10 330uF
R16 1.7K
R15 1K
X3 0.75A
X4 0.75A
Title
Sensor Subsystem Schematics by Andrey Podoprigora
Size
A4
Number
Ver #2
Revision
- - -
Date: 3.04.2025
File: C:\Users\..\Sensor_Subsystem_Schematics.SchDoc