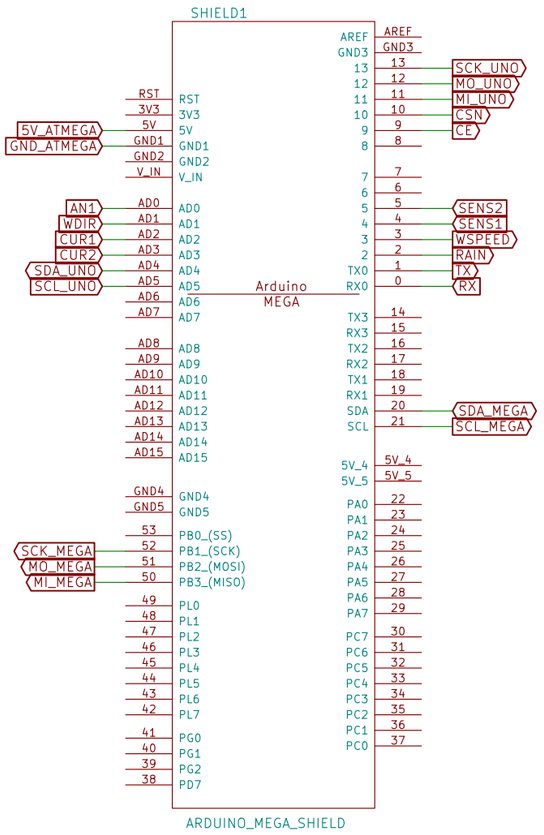

INPUTS

Current sensors

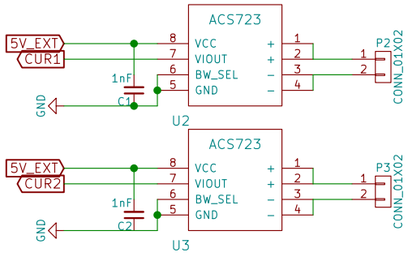

Wind sensors

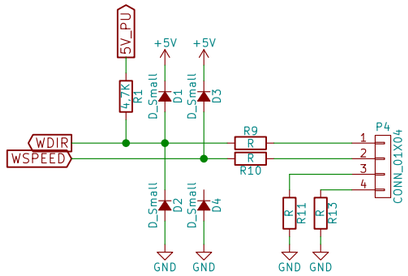

Rain sensor

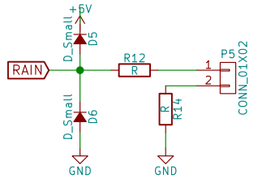

Analog sensor

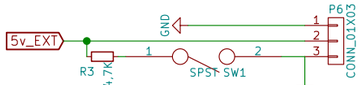

Digital sensors

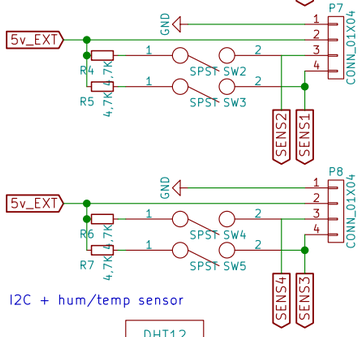

I2C + hum/temp sensor

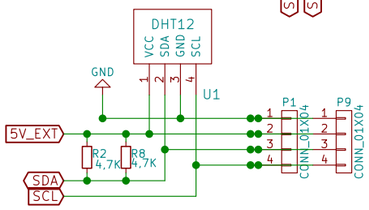

COMMUNICATION CHANNELS

Version switches

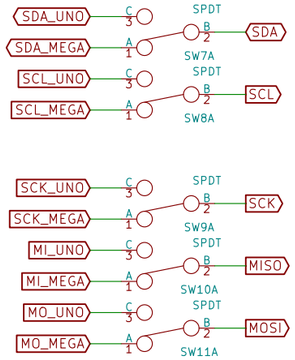

Serial/SPI channels

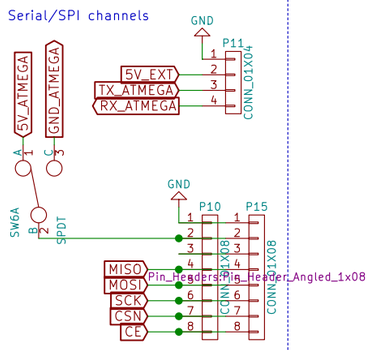

POWER CONTROL

Crowbar circuit / Voltage regulator / Decoupling

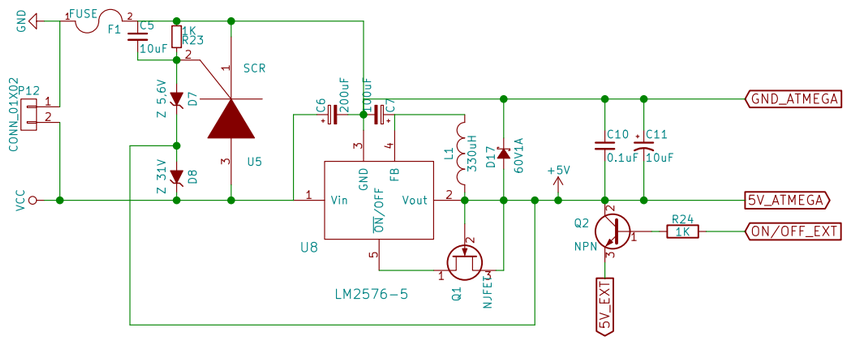

RELAY DRIVER

Amplification / Opto-isolation / I/O expander

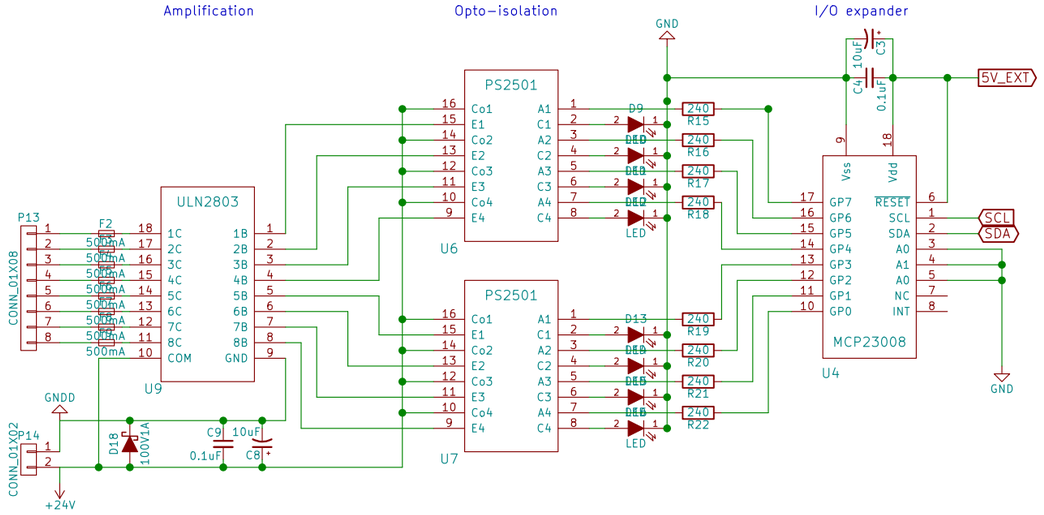

Sheet: /		
File: CAPE_Controller_schield.sch		
Title:		
Size: A3	Date:	**Rev:**
KiCad E.D.A. kicad 4.0.2+dfsg1-stable		Id: 1/1