# COURSE REPORT: DYNAMICS OF ELECTRICAL MACHINES AND DRIVES

*CONTROL OF A SE DC FOR ATM TRAMWAY VEHICLE "CARRELLI 1928"*

Student: Lorenzo Berti (10533775)

## PROBLEM DATA AND PLANT ANALYSIS

We can divide the problem into three parts: **excitation circuit, armature circuit and mechanical load**.

1) **Mechanical load:**

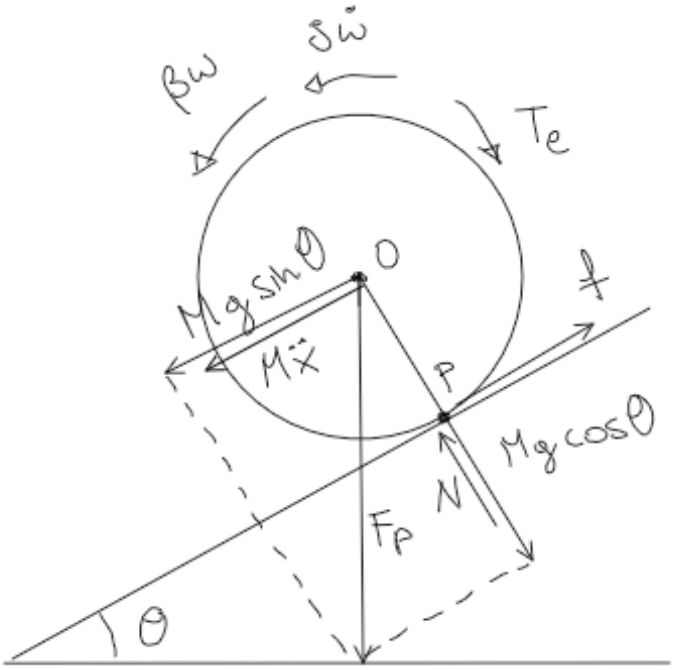


*(A) dynamic equilibrium of the train*

Calculating the momentum referred to the point P (the contact point between the disk and the plane) we obtain, looking at the image (A):

Mp: $T_e - Mg\sin(\theta)R - \beta\omega = J\dot{\omega} + MR\ddot{x}$ (dynamic equilibrium)

$\ddot{x} = R\dot{\omega}$ (for non-slipping condition)

$T_e - Mg\sin(\theta)R - \beta\omega = (J + MR^2)\dot{\omega}$ (1)

$Mg\sin(\theta)R = T_l$ (which is the load due to the sloping plane)

Where $M = M_t + N_p M_p$ ($M_t$ is the mass of the train, $N_p$ number of people, $M_p$ average mass of each person)

$R = \frac{v_n}{\omega_n}$

From (1) eq I can compute the transfer function of the mechanical load:

$(T_e - T_l)\frac{1}{J_{eq}s+\beta} = w$ → $G_w = \frac{1}{J_{eq}s+\beta}$ (2) (transfer function of the mechanical load)

I need to know the two parameters $J_{eq}$ and $\beta$:

$J_{eq}$: $Jp = \mathrm{J} + MR^2$

Where $\mathrm{J} = {}^{1}/_{2}\, mR^2$ (the moment of inertia of a solid homogeneous disk with mass m)

Considering M≫m I can neglect J in the computation of the inertia

So $Jeq = \mathrm{M}R^2$

$\beta$: $\beta = \frac{T_f}{\omega_\mathrm{n}}$

Where $T_f = F_f R = \frac{1}{3} F_\mathrm{t} R = \frac{1}{3} M a_n R$

```
%mechanical load
wn= 314;%rad/s
vn= 60*(1000/3600); %m/s
R=vn/wn; %m
M=10*1000+200*80; %kg
an=60*(1000/3600)/25;%m/s^2
Ft=M*an;%N
Ff=(1/3)*Ft; %N
Tf=Ff*R;%Nm
beta=Tf/wn;%Nm/s
J=M*R^2;%kg*m^2
```

*(B) it's the portion of the MATLAB code in which the data regarding the mechanical load are computed*

**2) Excitation circuit:**

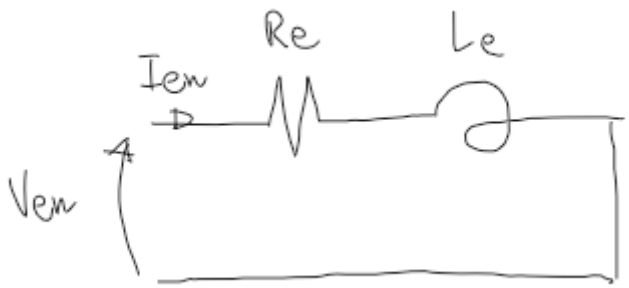


*(C) excitation circuit*

Analysing the excitation circuit in picture (C) I can calculate the transfer function for the excitation current:

$V_{en} = R_e i_e + L_e p i_e$ (Kirchhoff voltage's law)

$V_{en} \frac{1}{sL_e + R_e} = i_e$ (in frequency domain)

$G_{ie} = \frac{1}{sL_e + R_e}$ (transfer function) (3)

Where $R_e = \frac{V_{en}}{I_{en}}$ And $L_e = \tau_e R_e$

```
%excitation circuit
tau_e=1; %s
Ien= 1; %A
Ven= 120; %V
Re= Ven/Ien;%Ohm
Le= tau_e*Re;%H
```

*(D) it's the portion of the MATLAB code in which the data regarding the excited circuit are computed*

### 3) Armature circuit

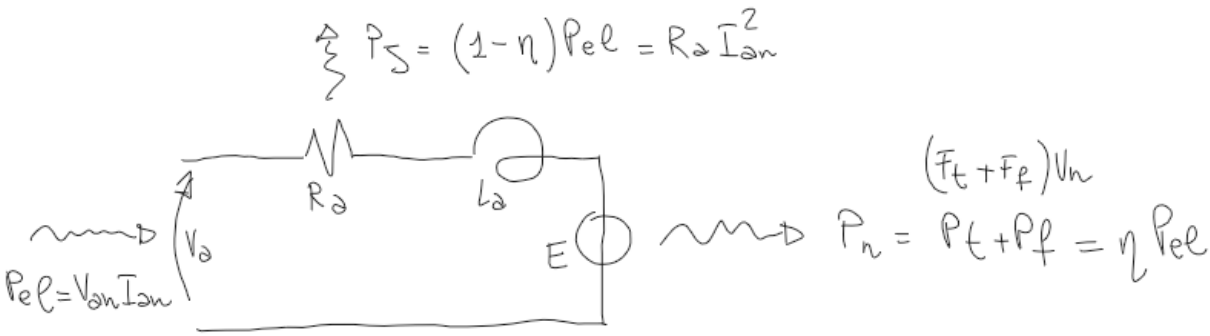


*(E) power balance of the armature circuit*

The transfer function can be calculated by analizing the armature curcuit:

$V_a = R_a i_a + L_a p i_a$ (Kirchhoff voltage's Law)

$(V_a - E)\frac{1}{R_a + L_a s} = i_a$ (in frequency domain)

$G_{ia} = \frac{1}{R_a + L_a s}$ (tranfer function) (4)

To calculate $R_a, L_a$ I need to analize the power balance

$$\eta = \frac{P_n}{P_{el}}$$

$P_n = P_t + P_f = (F_t + F_f)v_n$ (the power required by the mechanical load is determined by the traction and friction forces)

$(1-\eta)P_{el} = P_J = R_a i_{an}^2$ (the power which is not converted into mechanical power $(1-\eta)P_{el}$ is the power lost due to Joule losses $P_J = R_a i_{an}^2$)

So $R_a = \frac{(1-\eta)P_{el}}{i_{an}^2}$ (where $i_{an} = \frac{P_{el}}{V_{an}}$)

And $L_a = \tau_a R_a$

```
%armature circuit
Pn=(Ft+Ff)*vn;%W
Pel=Pn/0.9; %W
Van=600; %V
Ian=Pel/Van; %A
En=Pn/Ian;%V
K=En/(Ien*wn);%ohm/s
Tn=Pn/wn;%Nm
Ks=Tn/(Ian*Ien);
Ra=0.084; %0.1*Pn/(Ian^2);%ohm
tau_a=0.010; %s
La=tau_a*Ra;%H
```

*(F) it's the portion of the MATLAB code in which the data regarding the armature circuit are computed*

## CONTROL DESIGN

The three plants that I need to control are (2), (3), (4):

$$G_w = \frac{1}{J_P s+\beta} \quad (2) \qquad G_{ie} = \frac{1}{sL_e+R_e} \quad (3) \qquad G_{ia} = \frac{1}{R_a+L_a s} \quad (4)$$

I used the traditional speed control scheme for separatly excited DC machine:

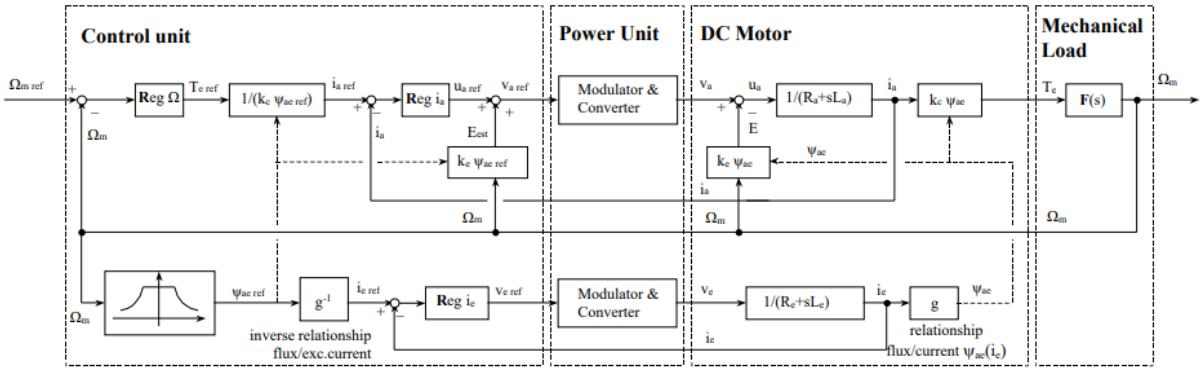


*(G) Speed control scheme of a separately excited DC machine*

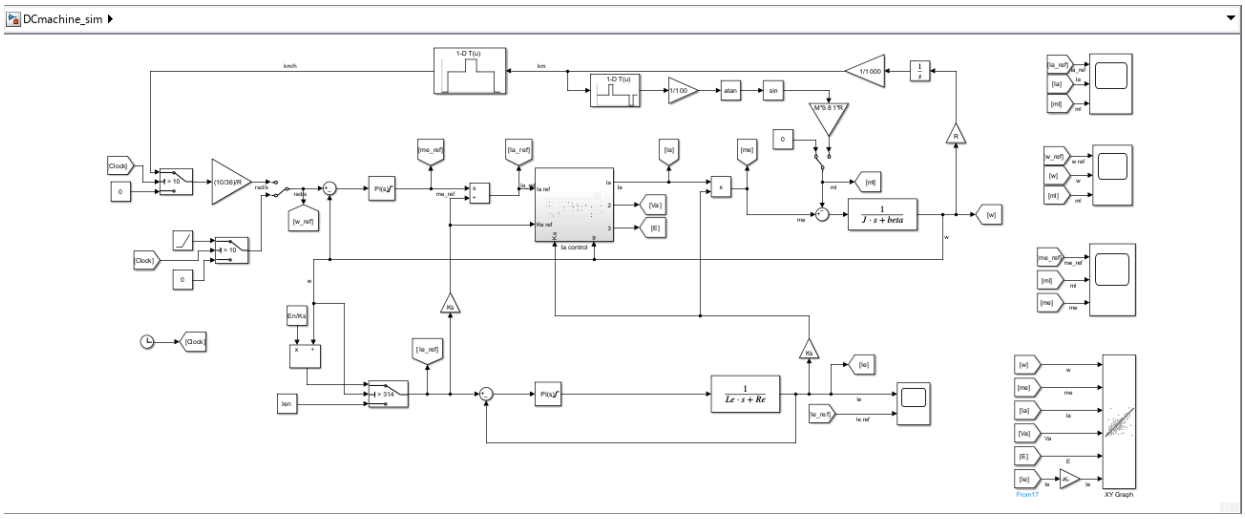


*(H) simulink implementation of the problem and control*

I chose PID control strategy and I used the “pidtune” function in matlab in order to obtain Kp, Ki through the specifications Pm and wc which I selected trying and failing on simulink simulation

```
%w requirements
wc_w= 7;
Pm_w= 90;

%Ia requirements
wc_Ia= wc_w*10;
Pm_Ia= 80;

%Ie requirements
wc_Ie= 0.9;
Pm_Ie= 90;

%% REGOLATORs
%w regulator
opt_w=pidtuneOptions('PhaseMargin', Pm_w);
[Reg_wpi, info_w]=pidtune(Gw,'PI',wc_w,opt_w);
Reg_w=tf(Reg_wpi);

%Ia regulator
opt_Ia=pidtuneOptions('PhaseMargin', Pm_Ia);
[Reg_Iapi, info_Ia]=pidtune(GIa,'PI',wc_Ia,opt_Ia);
Reg_Ia=tf(Reg_Iapi);

%Ie regulator
opt_Ie=pidtuneOptions('PhaseMargin', Pm_Ie);
[Reg_Iepi, info_Ie]=pidtune(GIe,'PI',wc_Ie,opt_Ie);
Reg_Ie=tf(Reg_Iepi);
```

I implemented the controllers in simulink using the “PID controller” block and their relative antiwindup strategy due to the saturation of $V_a, V_e$ which can’t be greater than $V_{an}, V_{en}$ because of Power supply limitations.

In addiction, please notice that I selected the armature current controller bandwidth 10 times the one of the angular speed because it is necessary to design separately the two controller (cascade control loop).

## RESULTS AND DISCUSSION

### Operating region

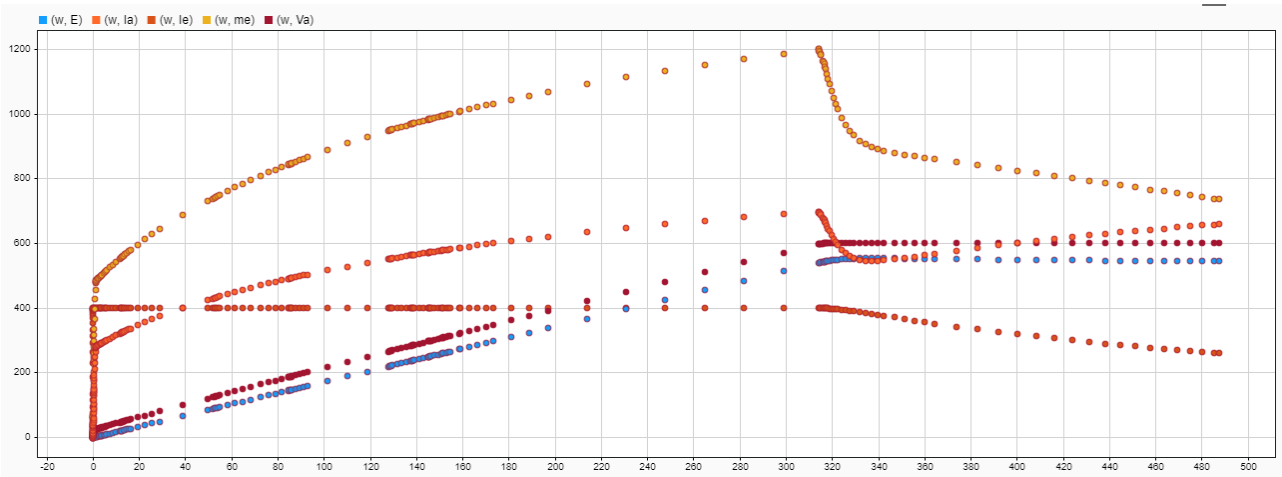


*(I) Operating region*

I computed the operating region to be sure that in steady state conditions nothing goes over the rated values.

It's interesting to notice how in flux weakening region the torque and the armature current decrease, while the armature voltage keeps constant.

Notice that the exciting current is constant in costant torque region, and it decreases in flux weakening region (I multiplied the Ie values by 400 just to visualize the results in the graph).

### Angular speed control

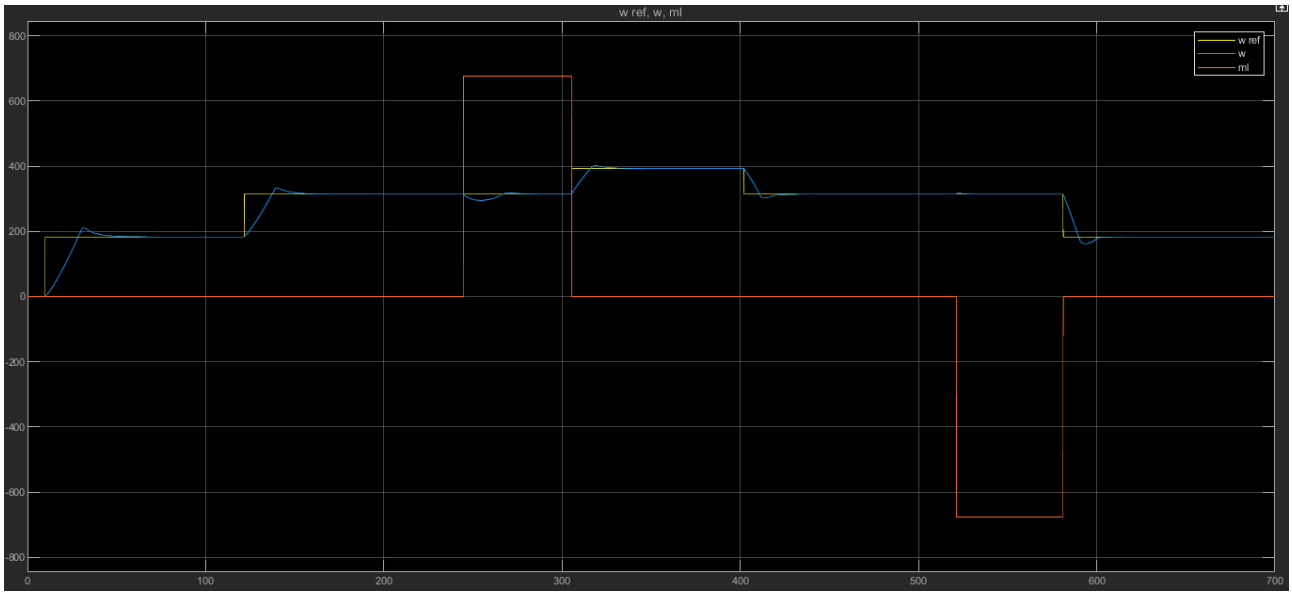


*(J) angular speed control*

The response is a little bit slow and with some overshoot, it comes out from some compromise between a sufficiently quick response and a not too aggressive controller to avoid high changes in the torque. However, the controller is stabilizing, and it is allowed by the tram to go quicker for a short period of time and for small values.

## Torque and armature current control

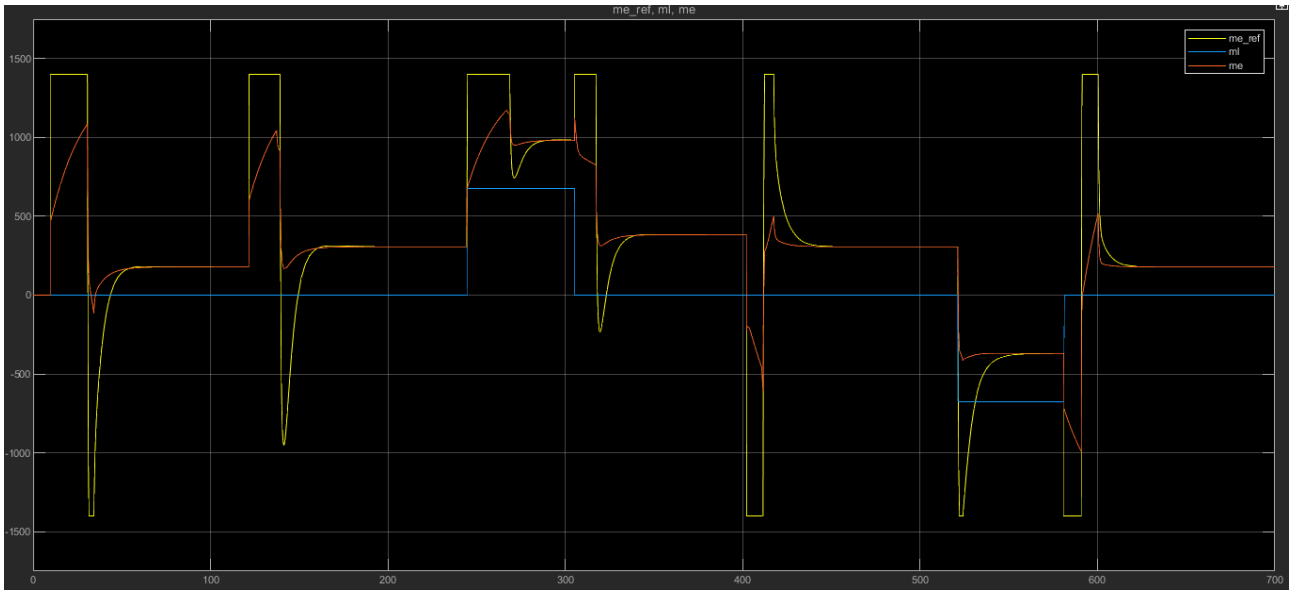


*(K) torque control*

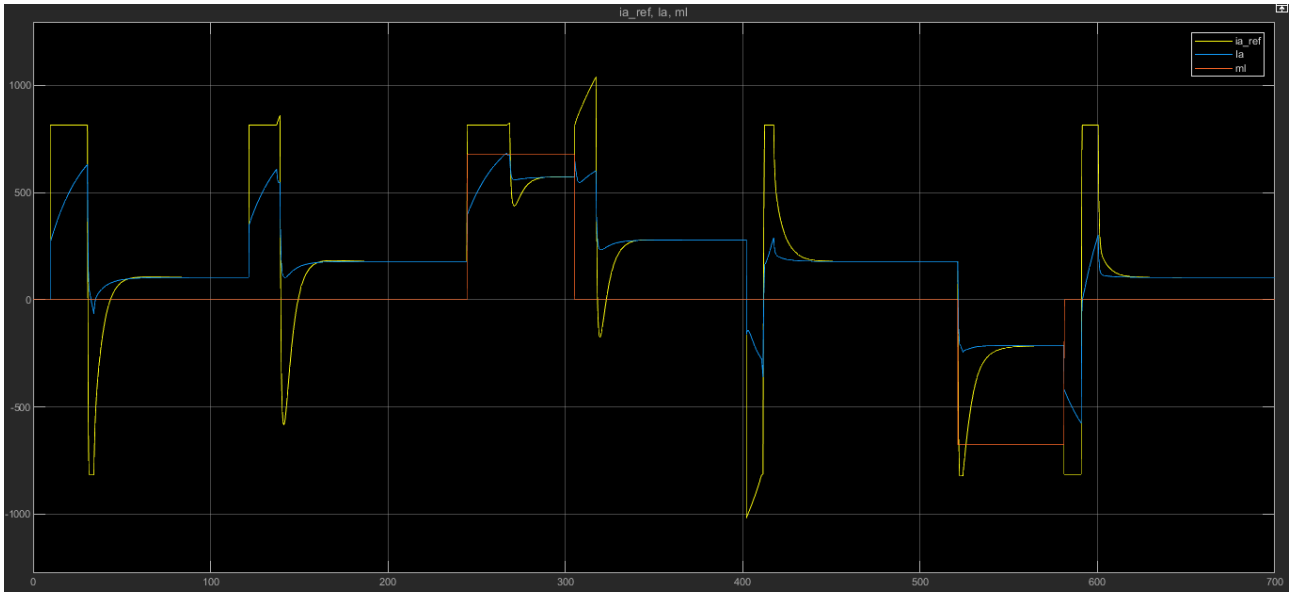


*(L) armature current control*

The two graphs are quite similar due to the proportional relation: T=K(ie)*Ia.

We can see the effect of the antiwindup scheme which limits the output when the reference saturates. there are no huge quick changes in the torque which can generate vibration and wear.

## Armature voltage control

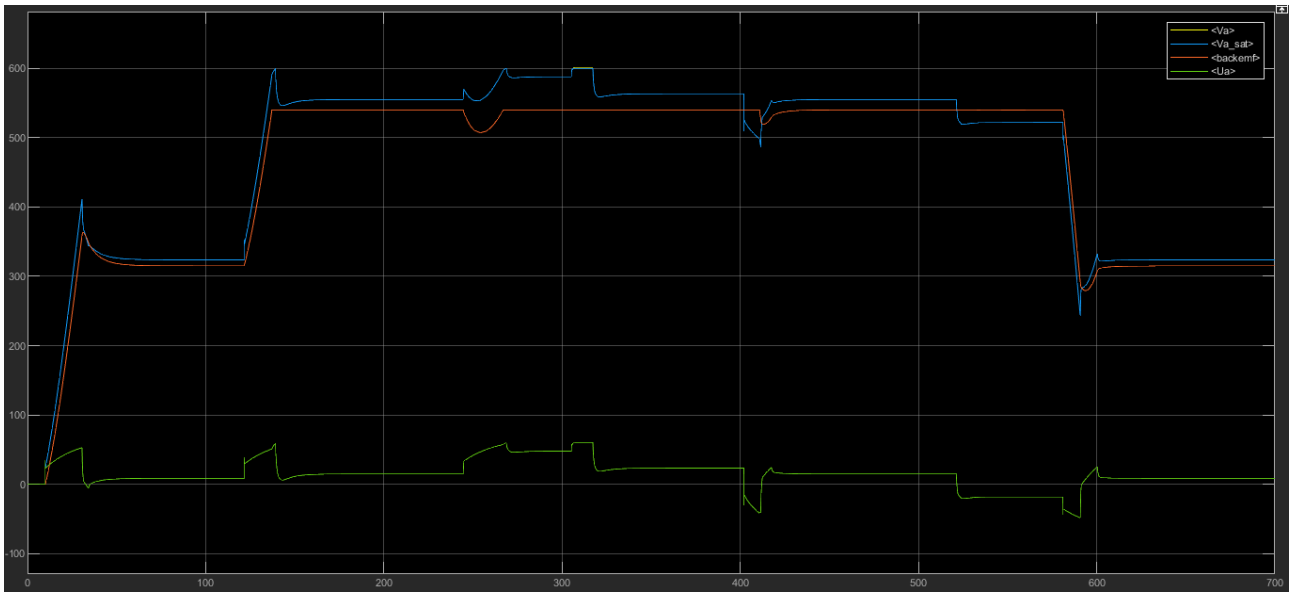


*(M) armature voltage control*

The armature voltage has the stricter requirement concerning saturation point due to the power supply limitations. while for armature current and torque it is possible to go above the rated value for a short time, regarding the armature voltage this is not possible. We can notice the effect of the antiwindup strategy at time 300s.