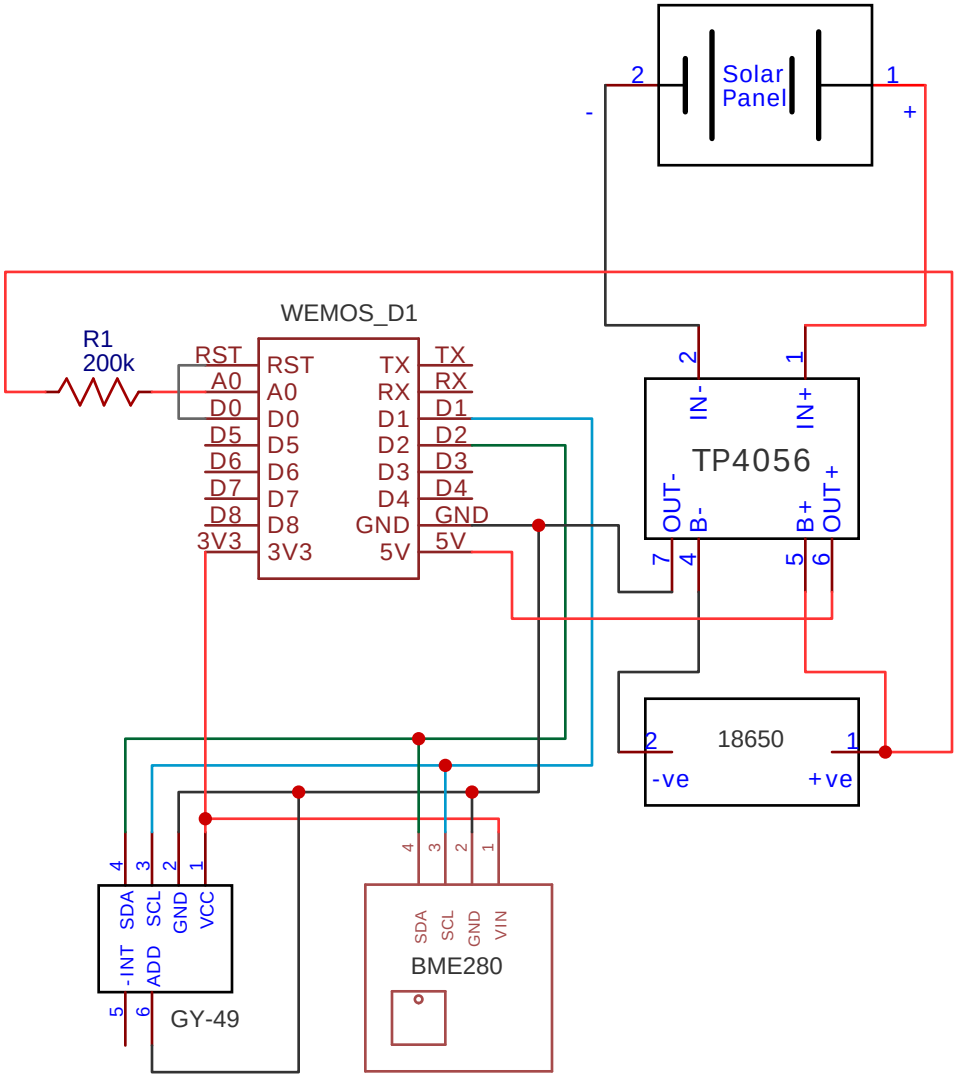

TITLE: Weather station circuit		REV: 1.0
	Company:	Sheet: 1/1
	Date: 2022-02-07 Drawn By: Lorenzoss	